PORTACEL

DISINFECTION SYSTEMS

AN ISO 9001 ACCREDITED COMPANY

PORTACEL

AN ISO 9001 ACCREDITED COMPANY

DISINFECTION SYSTEMS WORLDWIDE

Portacel supplies the latest in gas and liquid dosing technology, as well as associated monitoring and control systems throughout the world.
The Portacel reputation for accuracy and reliability is built on a simple principle - each customer's requirements are different. Portacel understands this, treating each installation with the same care and attention to detail at four critical stages:

● Design

A full scale development rig and the latest CAD technology are utilised by the in-house design team to create a modular system.

● Manufacture

All equipment is manufactured and tested at a purpose built facility within an ISO 9001 Quality Assured environment.

● Installation

Modern water treatment works are highly automated. Portacel equipment can be integrated into any control system.

● Support

Dedicated service teams offer expert support, planned maintenance programs, on-site training and a comprehensive after sales service.

Tel: +44 (0)1962 705200 Fax: +44 (0)1962 705279
e-mail: portacel_sales@tmproducts.com

The Portacel Difference

In-house design and development, coupled with an expert field sales force, enables Portacel to clearly understand market requirements. A rigorous product development programme ensures ease of use and optimised total life cost.

100% standby is achieved with the use of independent controllers. The unique modular design means that controllers and dosers are dedicated.

Systems integration with other process equipment is straightforward. Portacel equipment is designed to stand alone as well as integrating into specific applications.

On-line calibration coupled with the unique **auto zero** facility makes the Medway 2 the industry preferred residual analyser.

Tel: +44 (0)1962 705200 Fax: +44 (0)1962 705279
e-mail: portacel_sales@tmproducts.com

GAS STORAGE AND HANDLING

DOSING SYSTEMS

Gas Cylinders

Cylinder mounted Vacuum Regulators

Cherwell 'V' changeover system

Vacuum regulators

Colne gas sensor head

Gas Cylinders

Wall mounted Vacuum Regulators

Vacuum regulators

Colne gas sensor head

Liquid Drums

Series 200 Evaporator

Vacuum regulator

Evaporator

Colne gas sensor head

Gas Drums

Changeover System

Cherwell 'PV' changeover system

Vacuum regulators

Colne gas sensor head

Thames Dosers

Liquid Trent Dosers

Liquid Supply

Clyde Dosers (Remote)

Tel: +44 (0)1962 705200 Fax: +44 (0)1962 705279
e-mail: portacel_sales@tmproducts.com

TYPICAL SYSTEMS LAYOUT

MONITORING SYSTEMS

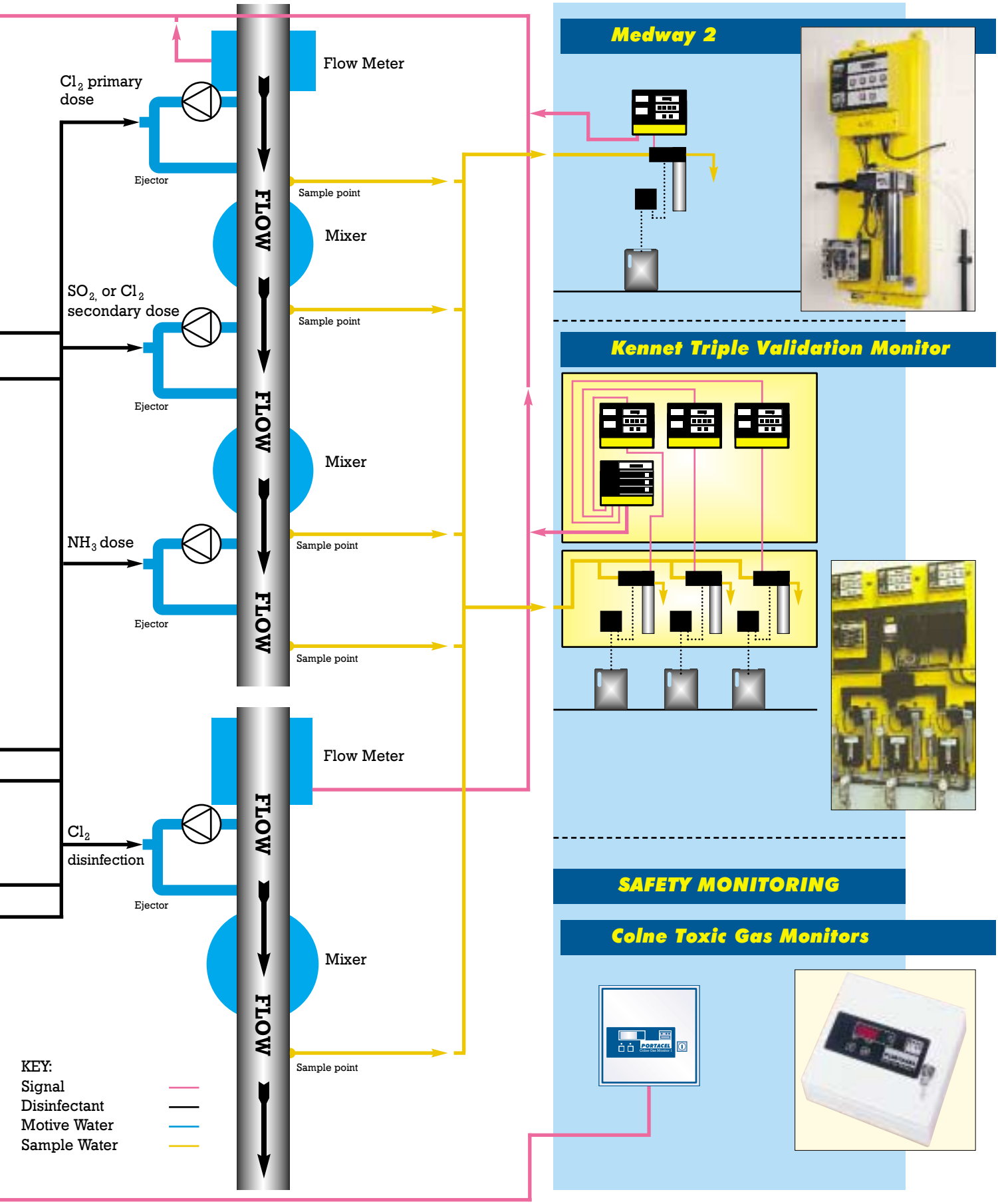

Tel: +44 (0)1962 705200 Fax: +44 (0)1962 705279
e-mail: portacel_sales@tmproducts.com

GAS DOSING SYSTEMS

Portacel design engineers have developed a range of gas dosers and ancillary equipment that is modular, simple to use and inexpensive to operate.

Clyde 25 g - 80 kg/hr

This versatile gas dosing unit can be wall mounted or mounted directly onto a gas container. This low cost metered approach is suited to a wide range of applications.

Thames 50g - 250kg/hr (auto/manual)

The Thames dosing unit is a large capacity unit capable of metering up to 250 kg/hr. The unit is available wall or floor mounted.

LIQUID DOSING SYSTEMS

Portacel has developed a unique Vacuum Dosing System that utilises proven technology to accurately meter chemical solutions. This eliminates the need for dosing pumps and the hazards associated with conventional pumping systems.

Liquid Trent 3 - 1,000 l/hr

The Liquid Trent dosing unit is designed to meter a supply of liquid precisely into a water system under vacuum conditions.

Auxiliary Equipment

To complement Portacel gas dosing products a complete range of ejectors and vacuum regulators are included in the product range.

- Ejectors
  1", 1½", 2" and 3"
- Vacuum Regulators
  5, 12, 60 and 200 kg/hr

Tel: +44 (0)1962 705200 Fax: +44 (0)1962 705279
e-mail: portacel_sales@tmproducts.com

SAFETY MONITORING SYSTEMS

Portacel has a comprehensive range of leak detection equipment that rapidly and accurately detects the presence of toxic gas.

- Colne gas monitors and sensor heads
  For Chlorine, Sulphur Dioxide and Ammonia

CONTROL SYSTEMS

Portacel recognises that the control of a dosing unit is vital to ensure operational costs are minimised.

- The AVP (Automatic Valve Positioner)
  A fully automatic flow and residual controller.
- The FPC (Flow Proportional Controller)
  Responds to a flow input signal.

MONITORING SYSTEMS

The Medway 2 chlorine residual analyser is designed for continuous measurement of chlorine residual and is available as an independent unit or as part of the Kennet Triple Validation Monitor (TVM).

ASSOCIATED EQUIPMENT

- Evaporators -
  Series 200E 230 kg/hr capacity
- Changeover systems -
  The Cherwell range
- Header/Manifold Systems

Tel: +44 (0)1962 705200 Fax: +44 (0)1962 705279
e-mail: portacel_sales@tmproducts.com

PORTACEL - The Colour is Yellow

PORTACEL - Local Distributor

Portacel
Winnall Valley Road
Winchester, Hampshire
United Kingdom, SO23 0LL
Tel: +44 (0)1962 705200
Fax: +44 (0)1962 705279
e-mail: portacel_sales@tmproducts.com
A part of T M Products

Visit the Portacel website for further information on Portacel products. http://www.portacel.com

We reserve the right to change the design and specification without notice. © T M Products Portacel. 001.1 5k 5.99

Typical Portacel Gas Dosing System

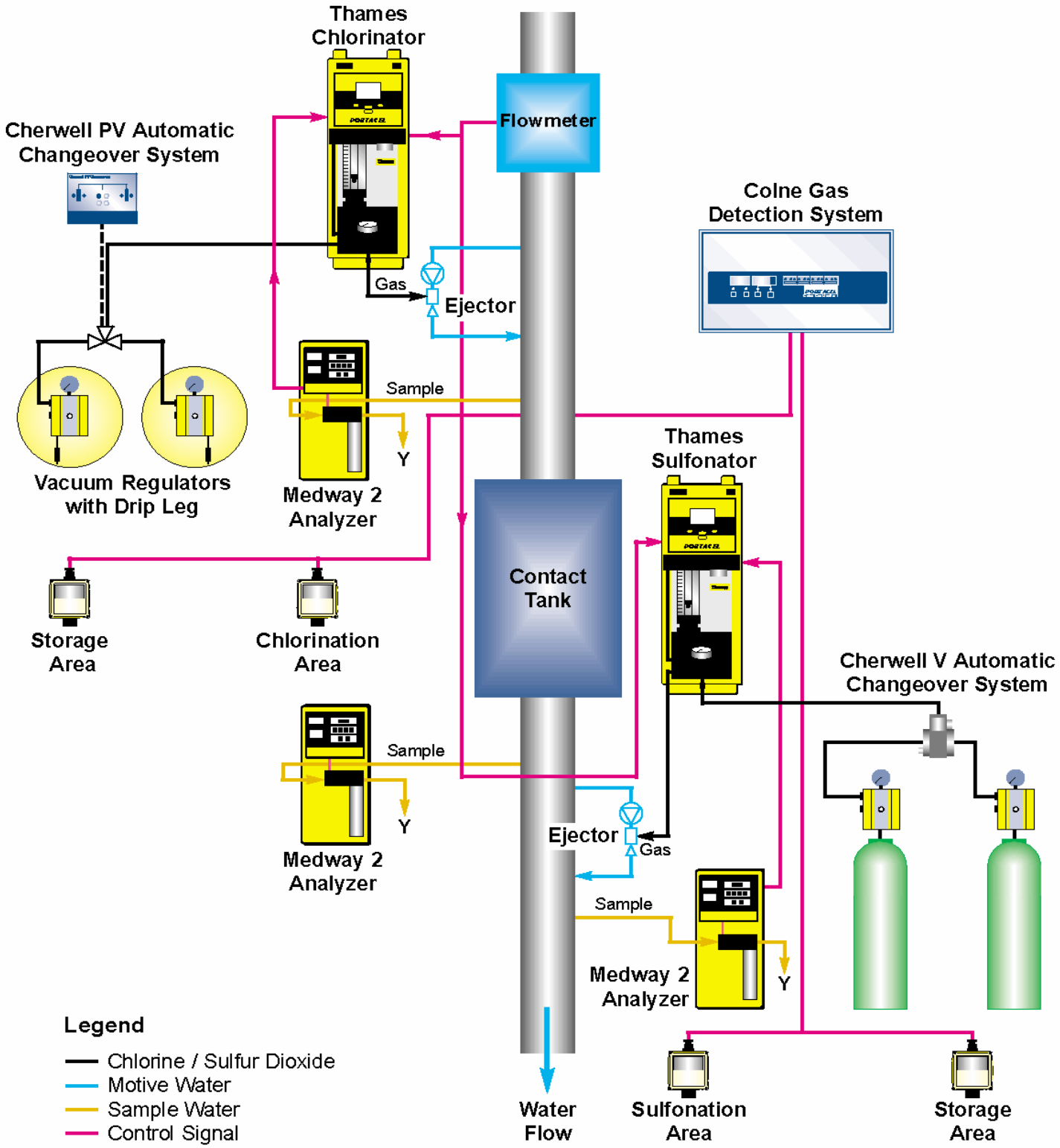

Vacuum Regulator

The Portacel Vacuum Regulator operates as a pressure reducing valve to transfer gas under pressure to gas under vacuum within the dosing system. The Regulator functions only when a vacuum is present and shuts off safely, in the event of a vacuum failure.

- A range of four units with capacities up to 200 kg/hr
- Shuts off the gas supply in the event of a vacuum failure
- Durable components
- Indication of state of gas supply
- Does not require an auxiliary pressure reducing valve
- Suitable for chlorine, sulphur dioxide or ammonia gas
- The units incorporate an integral pressure relief valve
- Low part count construction for low maintenance

Vacuum Regulator

HOW IT WORKS

The Portacel Vacuum Regulator consists of a sealed cavity with a diaphragm, gas inlet valve, vacuum outlet, high pressure vent and vacuum status indicator.

With a vacuum supplied to the cavity, the diaphragm is pulled towards the back of the Regulator and opens the gas inlet valve.

In the event of vacuum failure, an opposing spring returns the diaphragm to its original position and reseals the gas inlet valve.

If the supply of gas fails on the 5,12 and 60 kg/hr Regulators, the diaphragm pulls a sealing 'O' ring onto the back of the Regulator. This acts as a high vacuum shut off and prevents moisture from being pulled from the cylinder into the supply pipework. The vacuum status indicator shows the status of the unit if either of the above failures occur.

In the event of the gas inlet valve letting gas through when there is no vacuum, the excess gas passes to a vent which releases it safely to an external atmosphere.

Product Dimensions

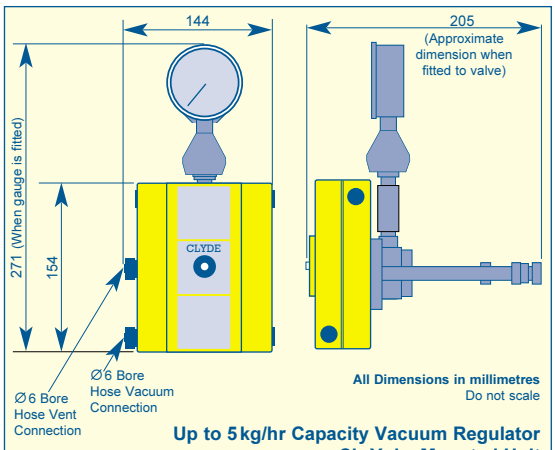

Up to 5 kg/hr Capacity Vacuum Regulator
Cl_2 Yoke Mounted Unit
(Dimensions also apply to SO_2 and NH_3 Units) **Weight: 2.4kg**

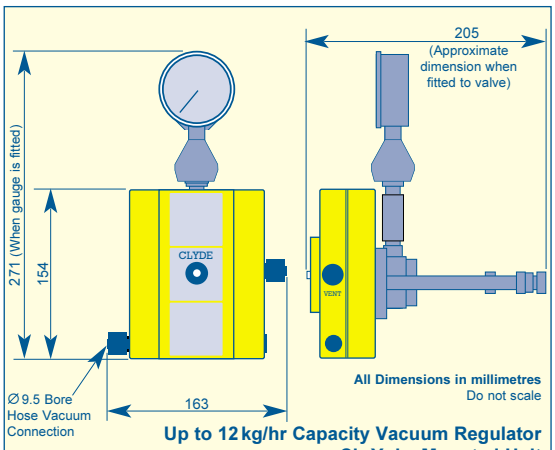

Up to 12 kg/hr Capacity Vacuum Regulator
Cl_2 Yoke Mounted Unit
(Dimensions also apply to SO_2 and NH_3 Units) **Weight: 2.75kg**

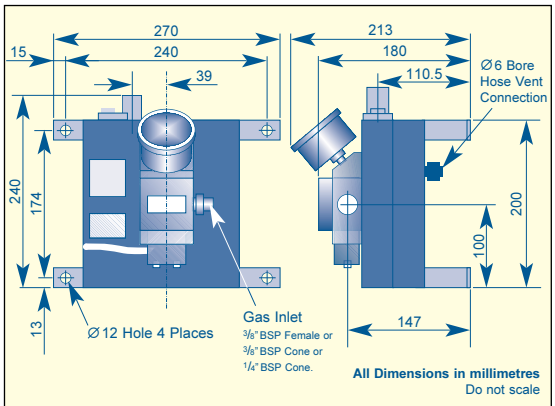

Up to 60 kg/hr Capacity Vacuum Regulator
Cl_2 Wall Mounted Unit
(Dimensions also apply to SO_2 and NH_3 Units) **Weight: 6.85kg**

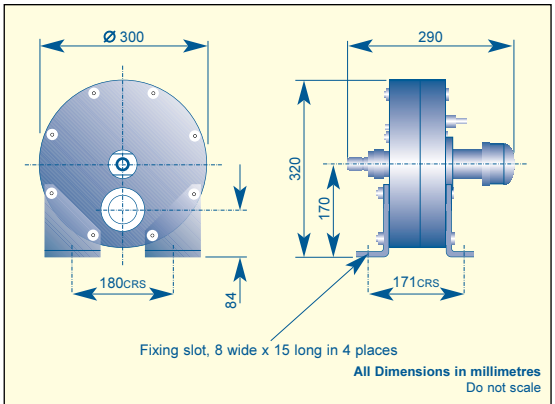

Up to 200 kg/hr Capacity Vacuum Regulator
Weight: 10.2kg

Vacuum Regulator

General Specification

The Portacel Vacuum Regulator will regulate the supply of pressurised; chlorine,* sulphur dioxide* or ammonia* gas into a vacuum dosing system at a rate of upto 5,* 12,* 60,* 200*kg/hr.

The Regulator consists of a sealed cavity, diaphragm and opposing return spring, gas inlet valve, vacuum outlet, high pressure vent and vacuum status indicator.

In the event of high vacuum caused by gas supply failure the Regulator will seal off the vacuum from the supply.

In the event of vacuum failure the return spring safely shuts off the gas supply inlet valve.

If gas pressure occurs in the vacuum cavity it will be vented safely to an external atmosphere.

Option 1: (5, 12, 60kg/hr versions)
A heater will ensure that the supply of gas does not condense in the dosing system.

Option 2: (5, 12, 60kg/hr versions)
A manual isolating valve will enable the Regulator to be shut off from the gas supply.

Option 3: (5, 12, 60kg/hr versions)
A pressure gauge will be fitted to the Regulator to indicate gas supply pressure.

Option 4: mounting options

Size (kg/hr)	Cylinder Mounted	Yoke Mounted	Wall Mounted
5	✓	✓	✓
12	-	✓	✓
60	-	-	✓
200	-	-	✓

Note: (200kg/hr version)
Must be used in conjunction with a vacuum and pressure relief valve.

*Delete as appropriate

Further Information

For further information concerning Portacel Vacuum Regulators or any other products offered by Portacel, please contact the Sales Department at the address and telephone number shown overleaf.

Technical Data

Up to 5kg/hr capacity (Basic build)

Capacity	Upto 5 kg/hr
Overall dimensions	120 mm deep **x** 165 mm wide **x** 155 mm high (230 mm high with pressure gauge)
Power requirements	240 v or 110 v 50/60 Hz for heater
Operating temperature	0 - 50° C
Pressure rating	16 bar
Connections	Vacuum 6 mm bore EVA tube; Vent 6 mm bore EVA tube
Colour	Yellow
Display	Loss of vacuum, loss of gas
Maximum gas inlet pressure	5 bar
Vacuum regulation	38 mm Hg - 28 mm Hg

Technical Data

Up to 12kg/hr capacity (Basic build)

Capacity	Upto 12 kg/hr
Overall dimensions	120 mm deep **x** 170 mm wide **x** 155 mm high
Power requirements	240 v or 110 v 50/60 Hz for heater
Operating temperature	0 - 50° C
Pressure rating	16 bar
Connections	Vacuum 8 mm bore EVA tube
Colour	Yellow
Display	Loss of vacuum, loss of gas

Up to 60kg/hr capacity

Capacity	Upto 60 kg/hr
Overall dimensions	225 mm deep **x** 277mm wide **x** 235 mm high
Weight	6.85 kg
Power requirements	240v or 110v 50/60 Hz for 6 w heater
Operating temperature	0 - 50° C
Pressure rating	16 bar max.
Connections	Vacuum - 3/4" solvent cement spigot, gas 3/4" BSP female
Colour	Black
Display	Pressure gauge

Up to 200kg/hr capacity

Capacity	Upto 200 kg/hr
Overall dimensions	560 mm deep **x** 190 mm wide **x** 320 mm high
Weight	10.2 kg
Power requirements	On applications
Operating temperature	0 - 50° C
Pressure rating	16 bar max.
Connections	Vacuum connection: 1.5" NB uPVC spigot
	Gas connection: 1 1/16" **x** 14 tpi Whitworth form
Colour	Grey

Portacel
Winnall Valley Road
Winchester, Hampshire
SO23 0LL U.K.
Tel: +44 (0) 1962 705200
Fax: +44 (0) 1962 705279
e-mail: portacel_sales@tmproducts.com
A part of T M Products

PORTACEL
DISINFECTION SYSTEMS

Visit the Portacel web site for further information on this and other Portacel products http://www.portacel.com

We reserve the right to change the design and specification without notice © T M Products Port DS. 009 5k 02.99

Vacuum Regulator – Yoke Mount – with Gauge
Method of Service Statement

The yoke mount vacuum regulator can be mounted on a header system with several cylinders connected, as shown, or it can be used to mount directly onto a cylinder valve. However the yoke mount vacuum regulator is used, the method of servicing this equipment is the same.

Before following this service procedure, all gas supply valves must be isolated and all gas pressure vented from any of the associated pipework. Even with this done, care should be taken since the vacuum regulator will still contain a certain amount of gas inside.

When servicing, lubricate O rings, inner and outer edges of diaphragm and plastic threads with chloroflurocarbon grease. ou will require the service kit below and specialist tools TE59, TE63 x2 & TE69.

Part Number – AAS1406 Spares Kit – 5kg Vacuum Regulator

Part Number		Description	uantity
DB32		Diaphragm	1
FA32		Strainer	1
OB124		O ring	1
OB136		O ring	2
OB157		O ring	1
OB44		O ring	3
OB46		O ring	1
OB91		O ring	1
OB92		O ring	1
WA45		O ring	1

Servicing Procedure – 5kg Vacuum regulator

1. Isolate gas cylinder of regulator to be worked on.
2. Run ejector until high vacuum is indicated on vacuum regulator.
3. Be aware that gas detection systems may alarm, as connections to the regulator are about to be broken.
4. Break all the pipe connections to the regulator by unscrewing nuts (NE117) and removing hoses.

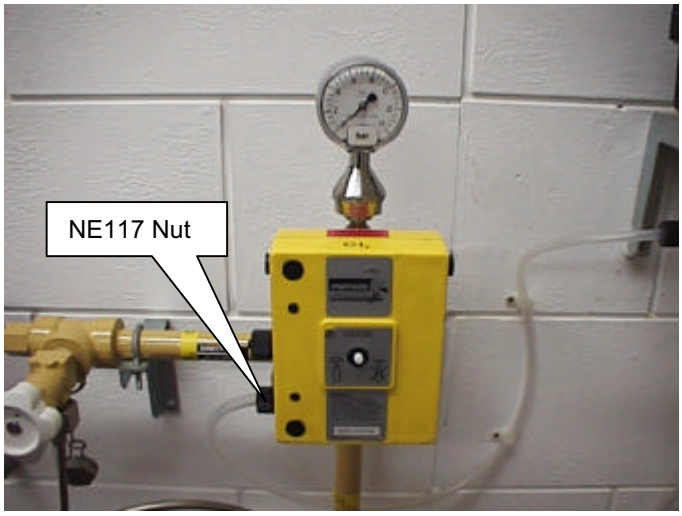

5. Undo the clamp screw (SM157) and remove regulator from gas cylinder manifold.

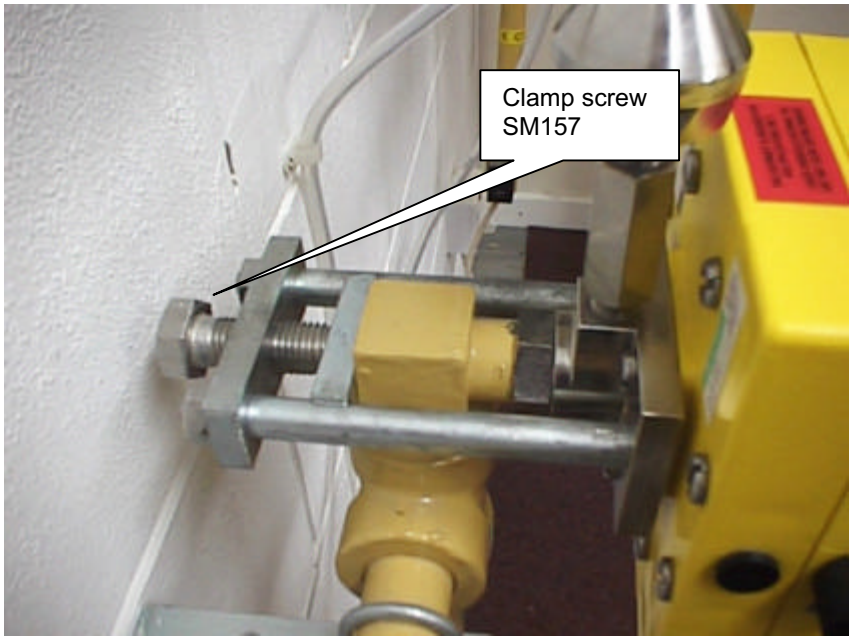

6. Continue with the rest of the serving procedure in a dry **well-ventilated** area or outside, as the regulator will still contain gas.

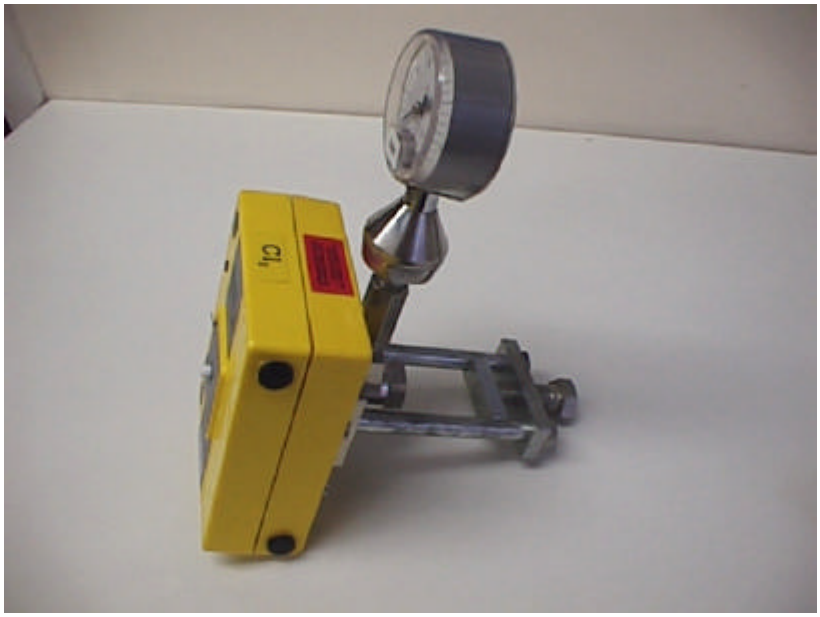

7. Remove the clamp nuts (ND77) and remove the backplate (BS4) and the yoke (BS5). Unscrew and remove the studs (SR31).

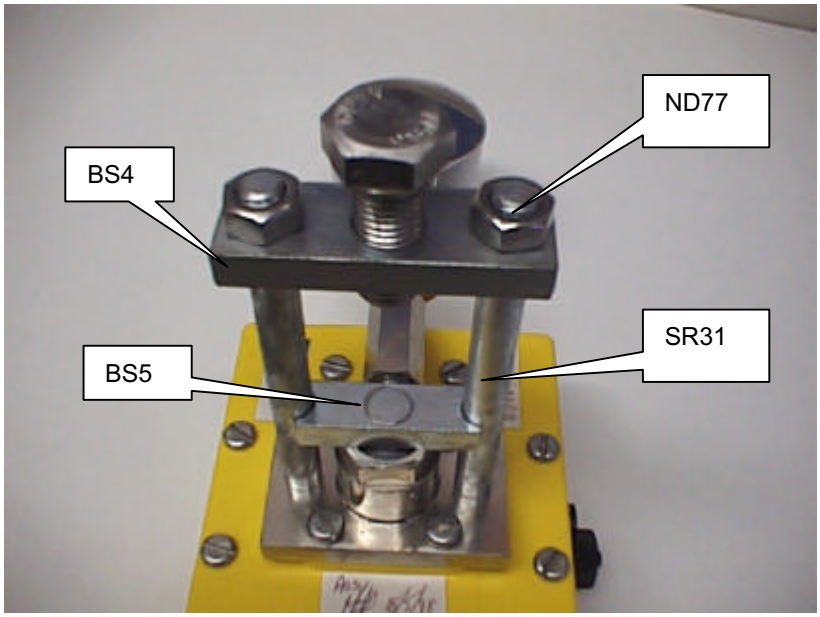

8. Unscrew and remove the adaptor (part no. varies according to gas).

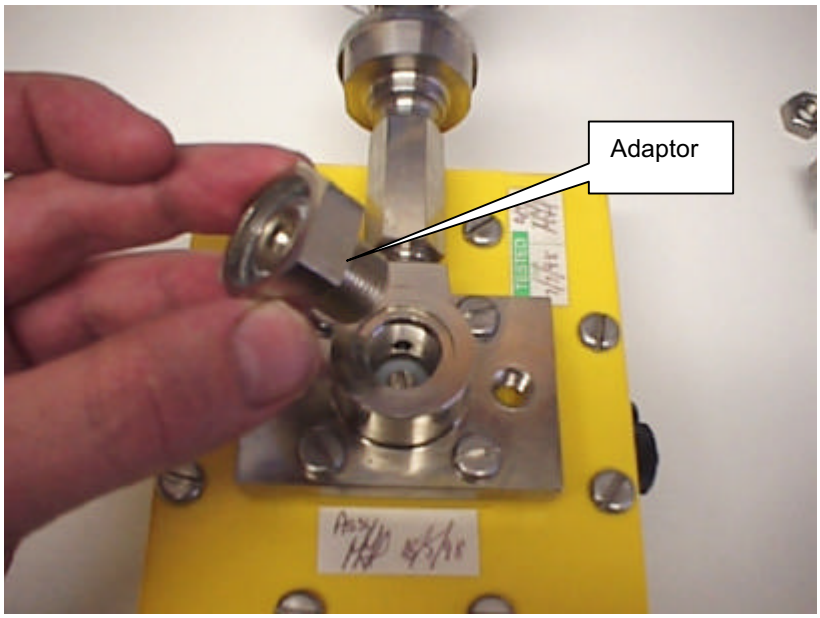

9. Replace the strainer (FA32) and washer (WA45) in the adaptor and put to one side.

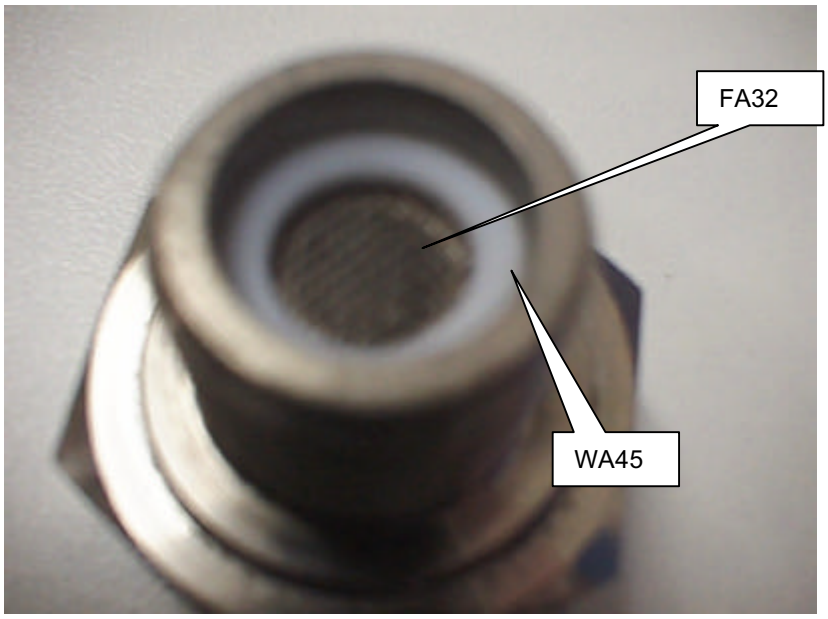

10. Remove the 8 screws (SM108), securing the front and back bodies together.

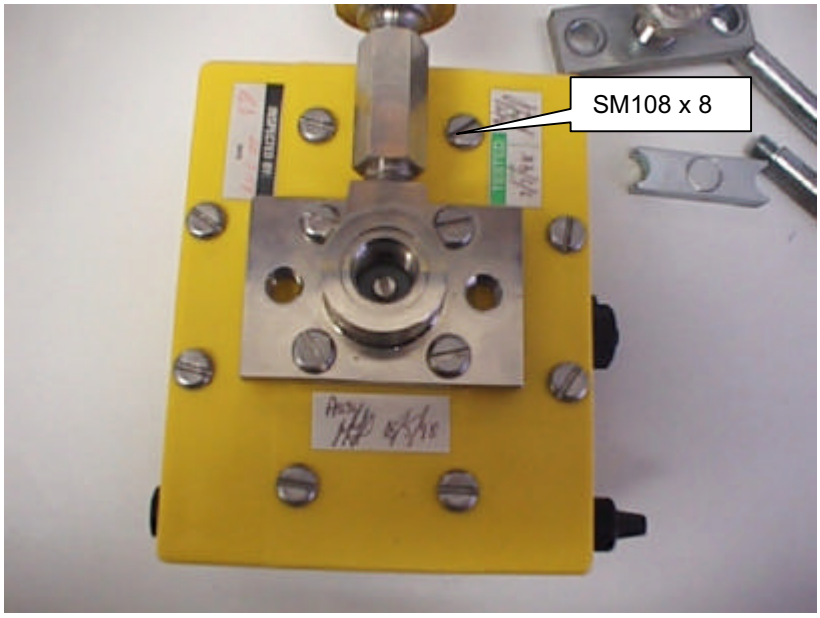

11. Separate the front body from the back body.

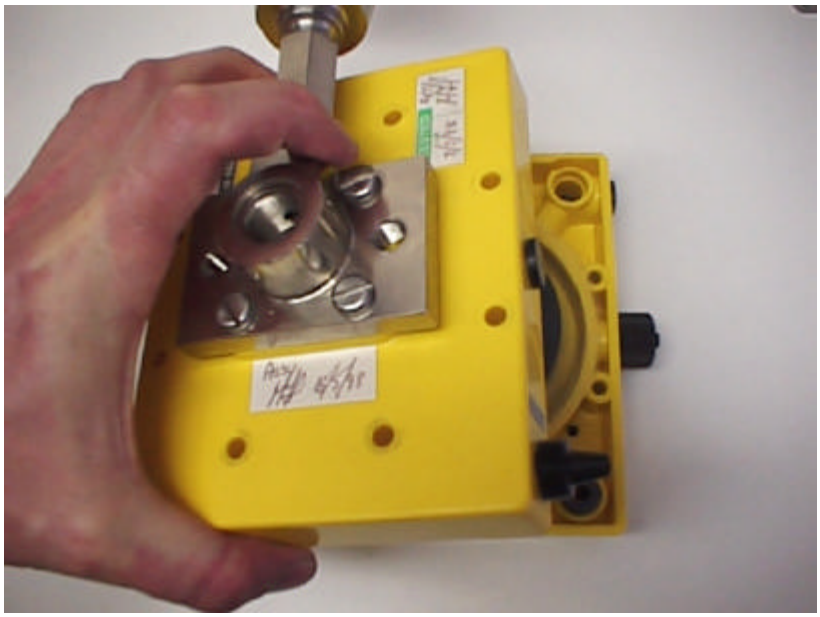

12. Remove the 4 screws (SM144), securing the manifold to the back body.

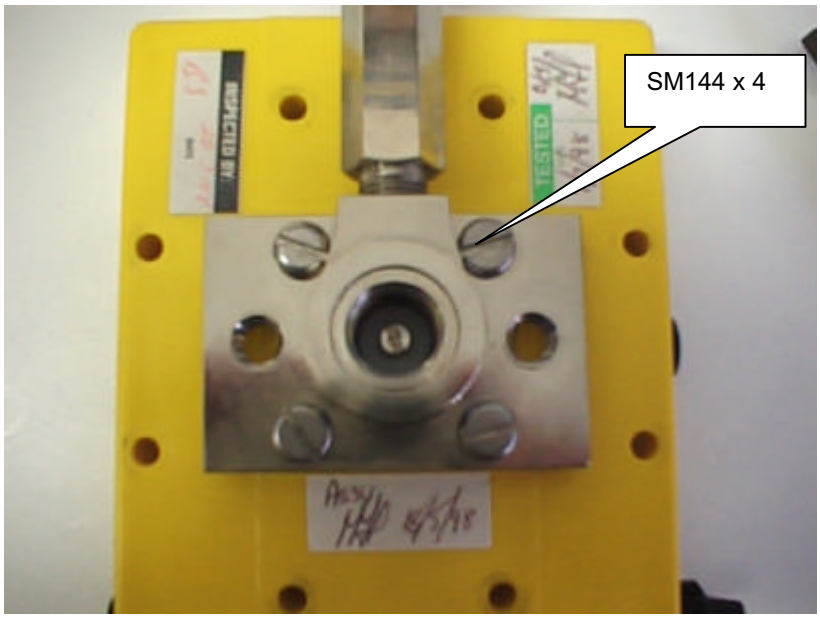

13. Remove the whole manifold assembly from the back body.

14. Using a suitable screwdriver in the slot of the gas valve (VA51), hold the gas valve still whilst turning the vent valve (VA52) counter clockwise by hand until they can be separated.

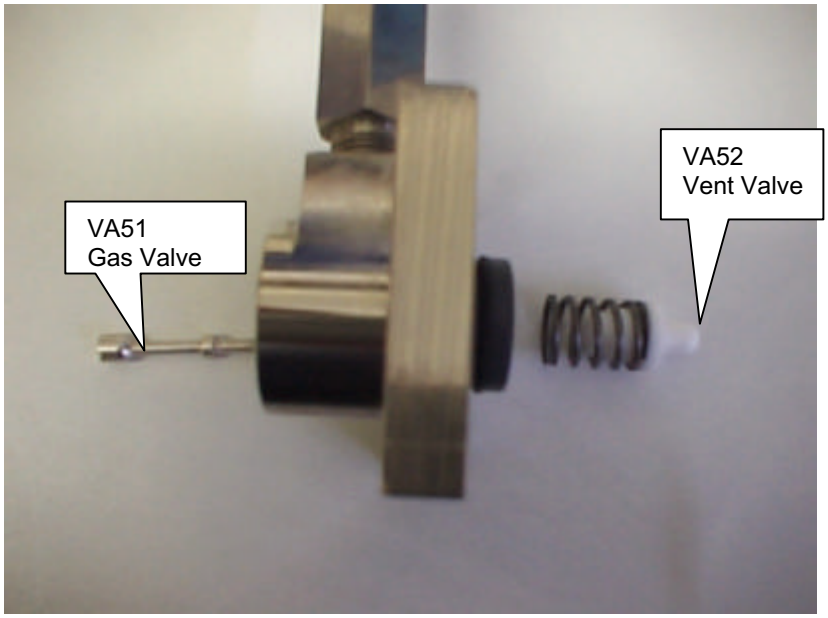

15. Inspect the gas valve for any damage or distortion. Replace if necessary. If no damage is evident, the valve should be cleaned and placed to one side.

16. On the manifold, pull to remove the bush (BP133) and replace O rings OB46 and OB124. Place the bush to one side.

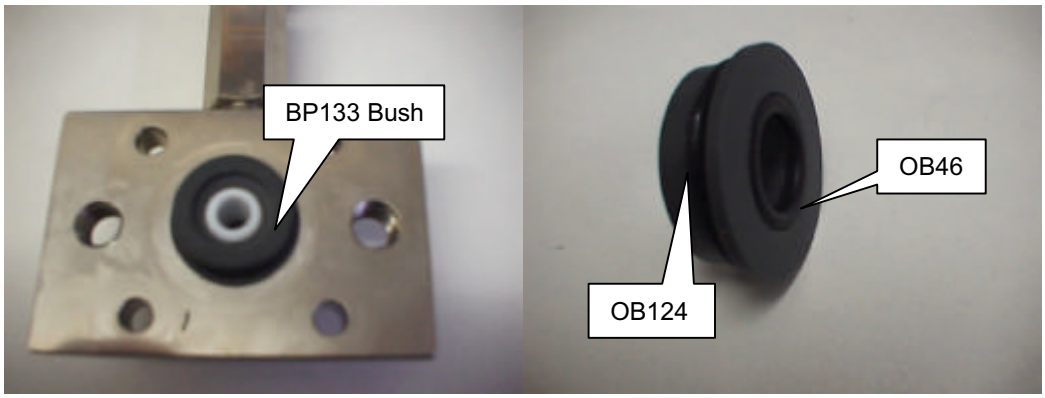

17. Holding the manifold, push the valve seat (SD107) out of the manifold. Change the O ring (OB 44). Place valve seat to one side.

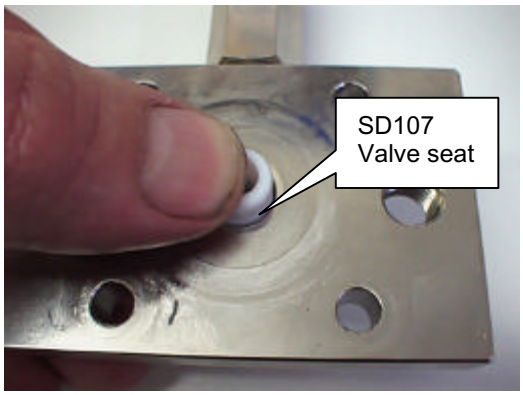

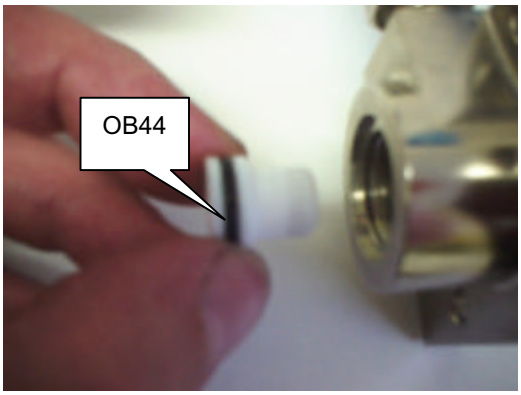

18. Change the O ring (OB91) on the outside of the back body and the O ring (OB92) on the inside of the back body.

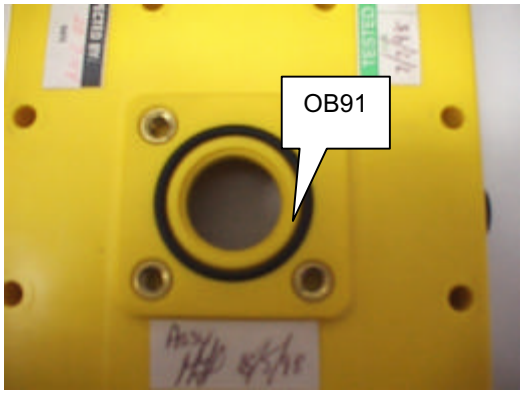

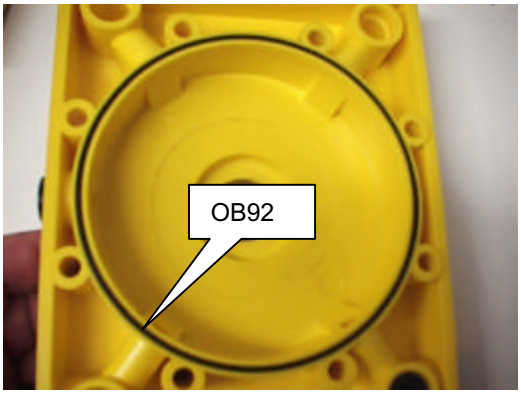

19. On the front body, take hold of the diaphragm assembly and pull to release it from the body. Change the O rings (OB157 & OB136)

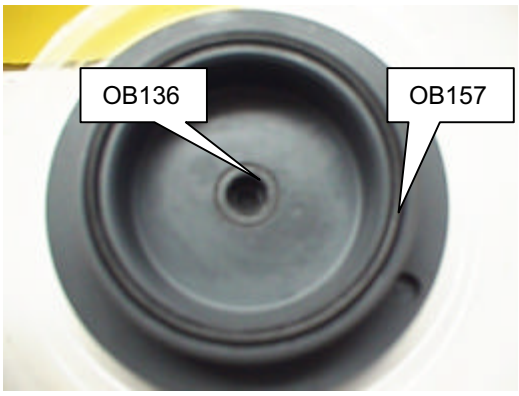

20. Using two special spanners (TE63) separate the diaphragm plate (AAS738) and the diaphragm ring (RB38). Remove and replace the diaphragm (DB32) and reassemble the diaphragm assembly.

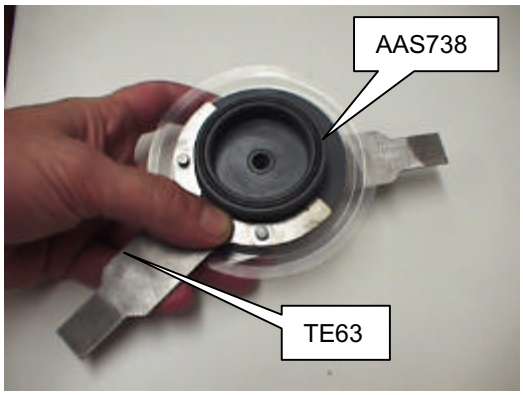

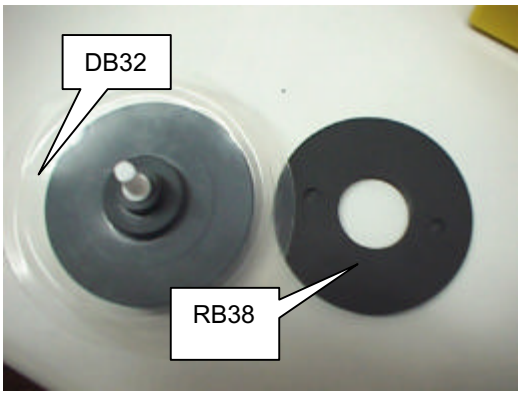

21. Replace O ring (OB136), located in the centre of the front body. Pull free the connector (CO20) from the corner of the front body. Change the 2 O rings (OB44) and refit the connector.

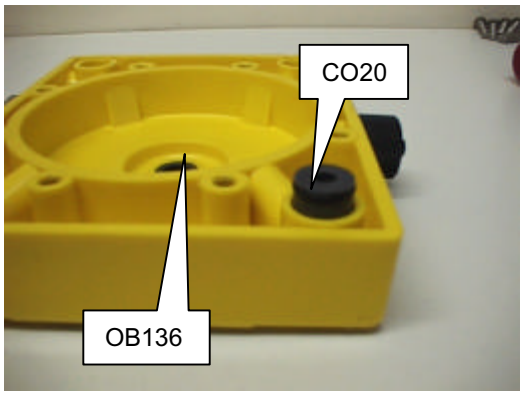

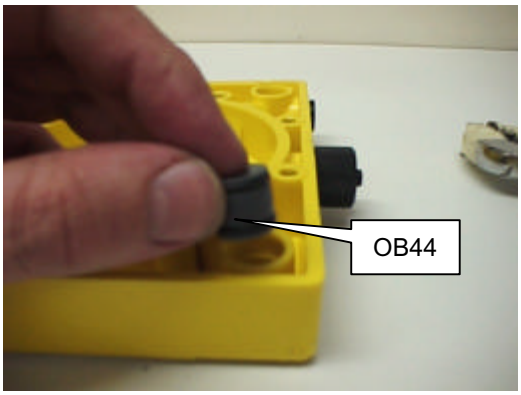

22. Reposition the diaphragm assembly into the front body, making sure that the spring (SL63) remains in position on the pin (P 48). Take the back body and offer up to the front body, trapping the diaphragm assembly in place.

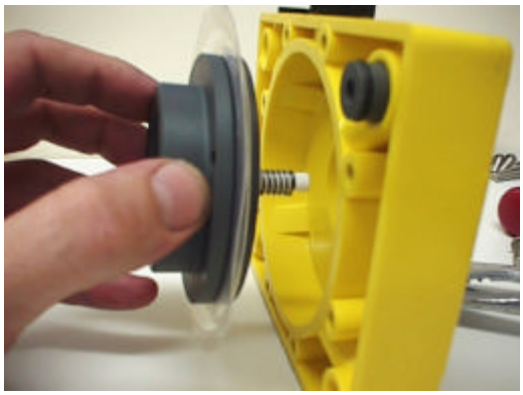

23. Insert special tool (TE59) into the back body to locate with the centre of the diaphragm assembly. Hold the front body, back body and alignment tool together whilst inserting and tightening the 8 retaining screws (SM108).

24. Insert the valve seat (SD107) into the manifold assembly and using press tool (TE69), push the valve seat in as far as it can go. It can be determined that the valve seat has seated correctly by a visual inspection inside the manifold assembly. The hole in the side of the threaded section and the end of the threaded section should be completely visible.

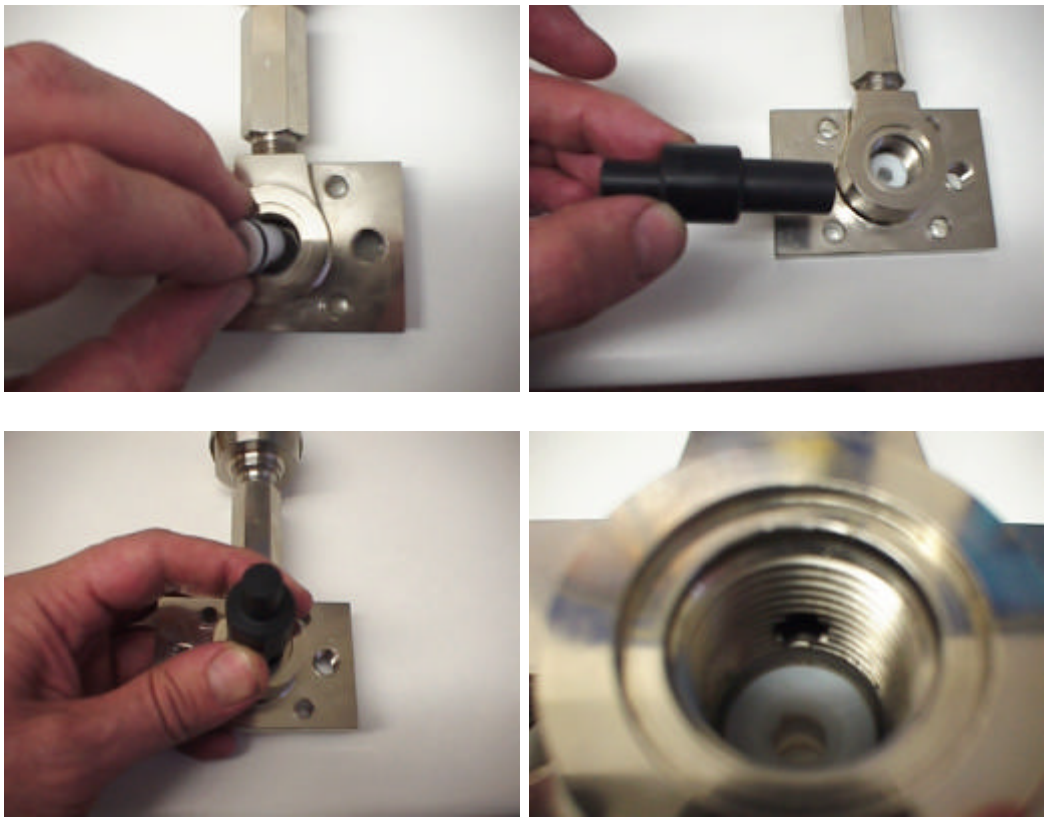

25. Place the bush (BP133) over the end of the valve seat (SD107).

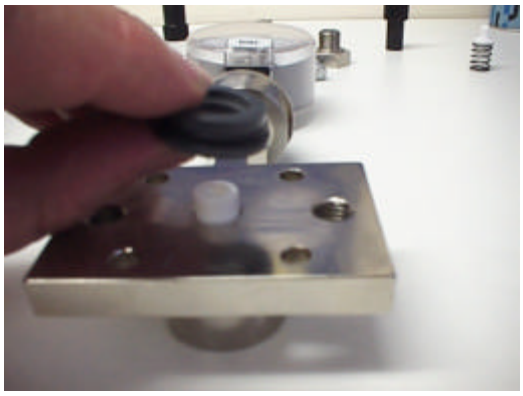

26. Insert the new or cleaned gas valve (VA51) through the valve seat from the back of the manifold. Holding the gas valve steady with a finger or screwdriver, align the vent valve (VA52) complete with spring (SL71) to the threads of the gas valve. Screw the vent valve onto the gas valve, finger tight only, but ensuring that they are screwed fully together. This can be determined by checking that the shoulder at the end of the thread on the silver gas valve is touching the flat face of the PTFE vent valve.

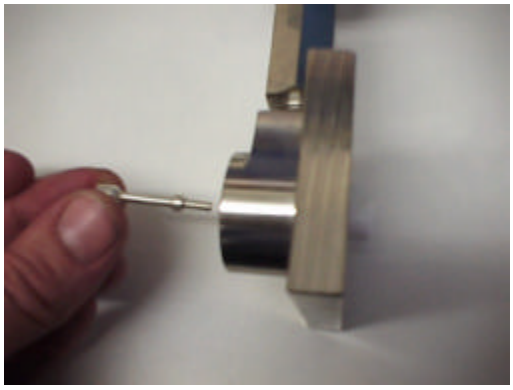

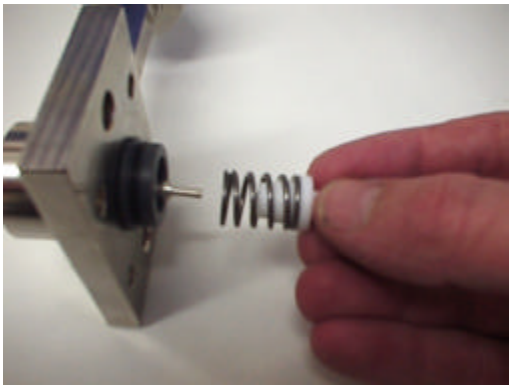

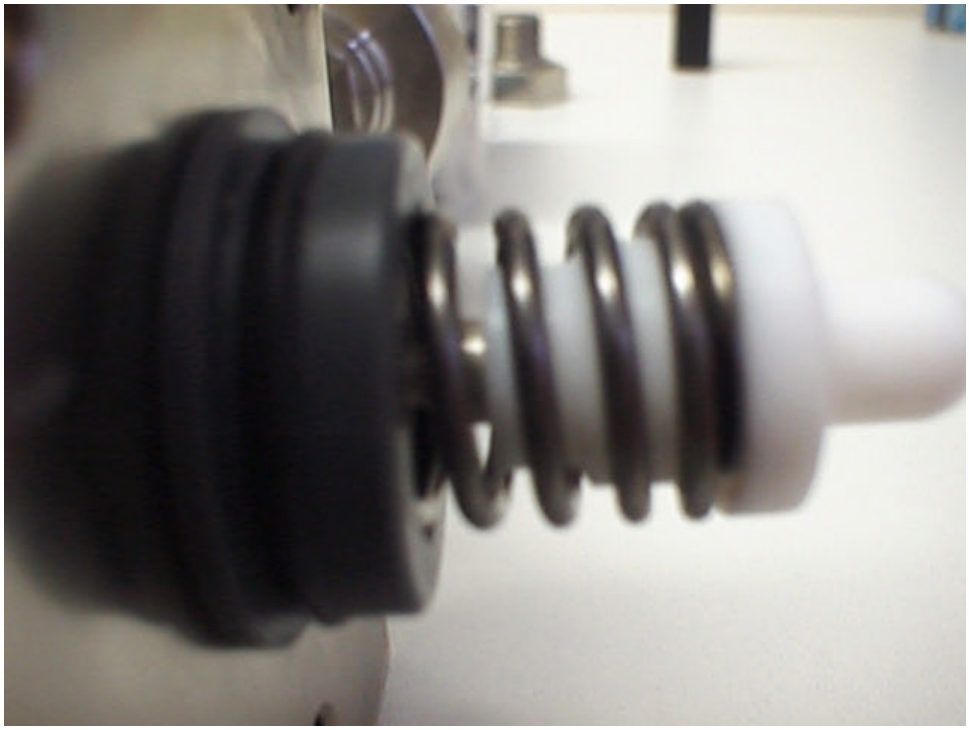

27. Position the manifold assembly, complete with valves, onto the back of the vacuum regulator and secure with the 4 screws (SM144).

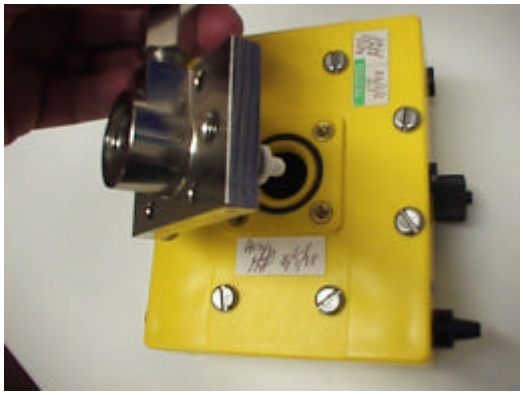

28. Replace the adaptor into the back of the manifold using a new copper washer (WB89).

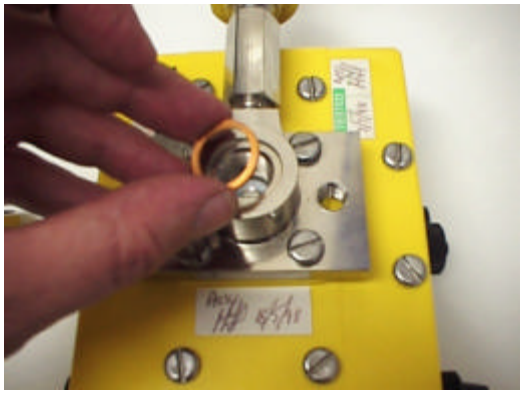

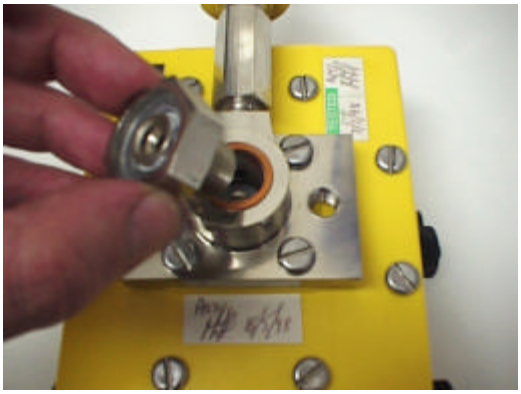

The adaptor will need to be tightened down sufficiently to ensure a gas tight seal between the adaptor and the manifold.

29. The studs (SR31) should be threaded into the back of the manifold and the yoke (BS5) placed onto between the studs. The backplate assembly (BS4)can now be placed onto the studs and tightened down with the nuts (ND77).

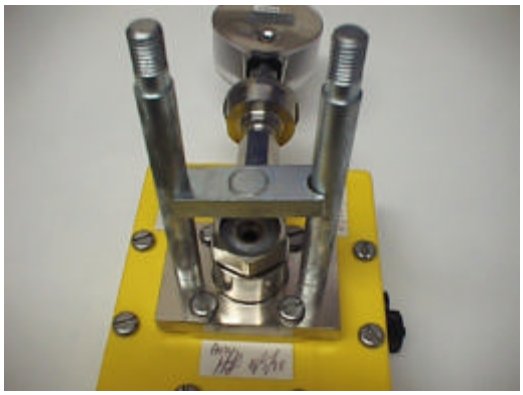

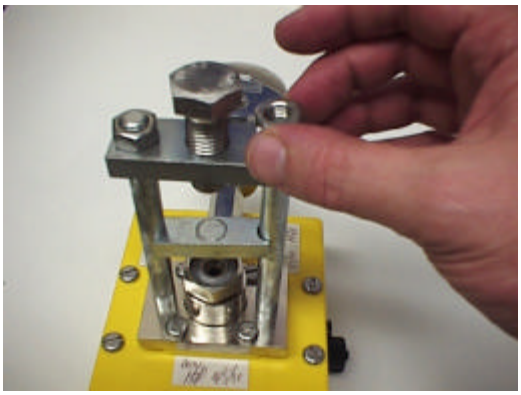

The vacuum regulator service is now complete and the unit can be re installed and put back into service, ensuring all safety procedures are followed for toxic gas installations.

Vacuum Regulator – 60kg/hr
Method of Service Statement

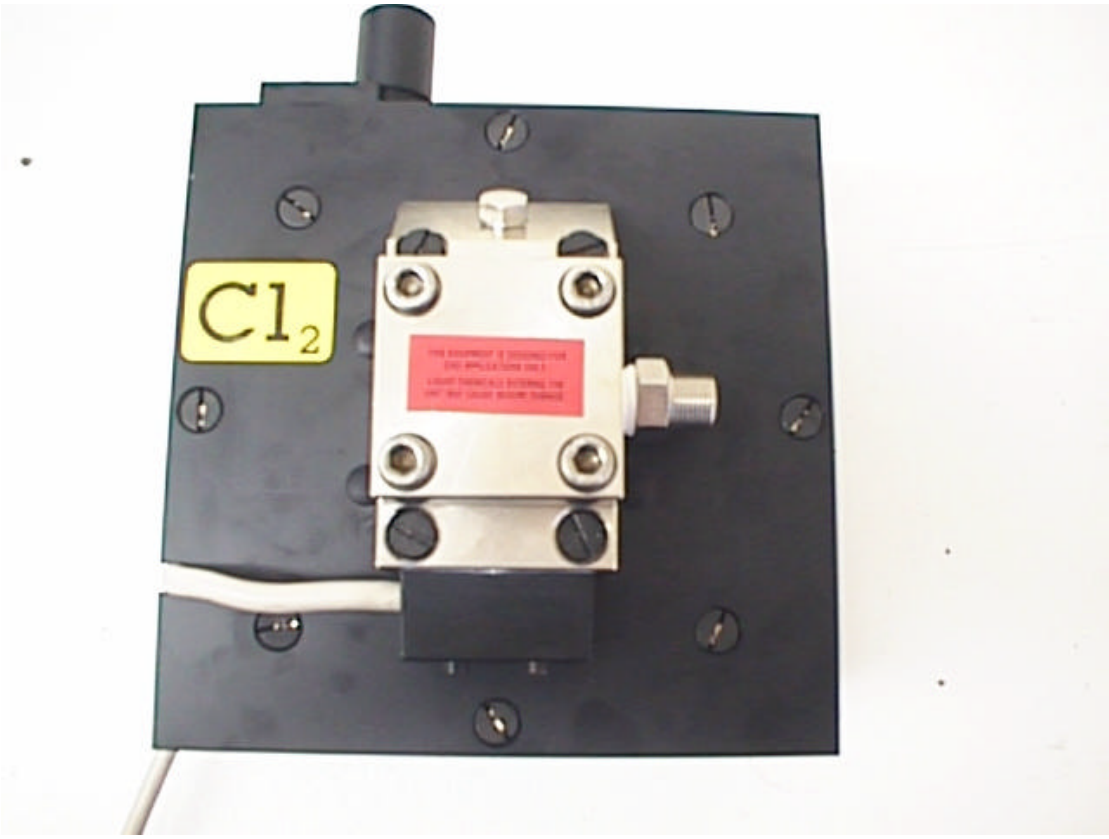

Before following this service procedure, all gas supply valves must be isolated and all gas pressure vented from any of the associated pipework. Even with this done, care should be taken since the vacuum regulator will still contain a certain amount of gas inside.

When servicing, lubricate O rings, inner and outer edges of diaphragm and plastic threads with chloroflurocarbon grease. ou will require the service kit below and specialist tools 2 x TE65.

Part Number – AAS1197 Spares Kit – 60kg Vacuum Regulator

Part Number	Description	Qty
41925	Washer	1
DB38	Diaphragm	1
FA44	Filter	1
OB100	O ring	2
OB101	O ring	1
OB106	O ring	1
OB107	O ring	1
OB110	O ring	1
OB111	O ring	1
OB112	O ring	1
OB116	O ring	1
WA64	Washer	1
WB64	Washer	1

Servicing Procedure

1. Isolate gas cylinders drums from regulator to be serviced.

2. Run ejector and dosing unit until gas pressure in vacuum regulator falls to zero.

3. Be aware that gas detection systems may alarm, as connections to the regulator are about to be broken.

4. Disconnect the gas inlet pipe from the inlet connection and the vacuum pipe from the vacuum connection.

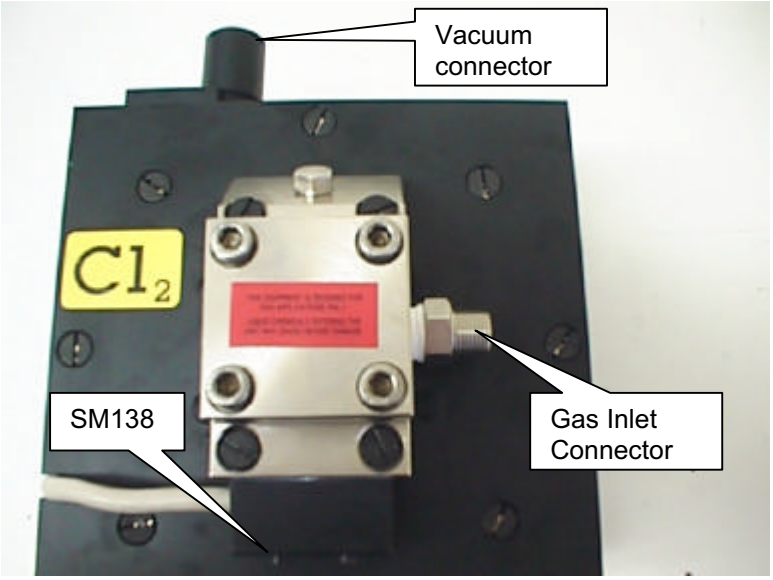

5. Remove the two heater block screws (SM138) and remove the heater block. Remove the four bolts securing the vacuum regulator to the wall and take the regulator to a clean, well ventilated area for servicing.

6. Remove the four screws (SM173) and spring washers (WB91) securing the filter cap (CC111). Remove filter cap.

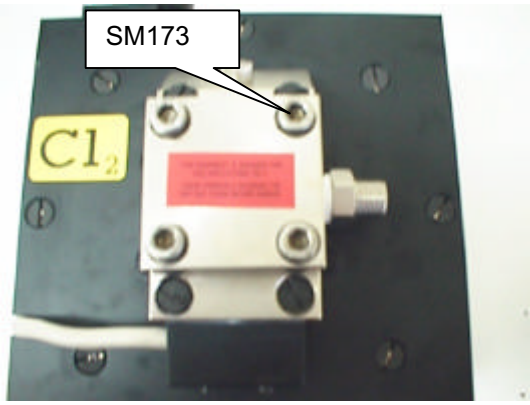

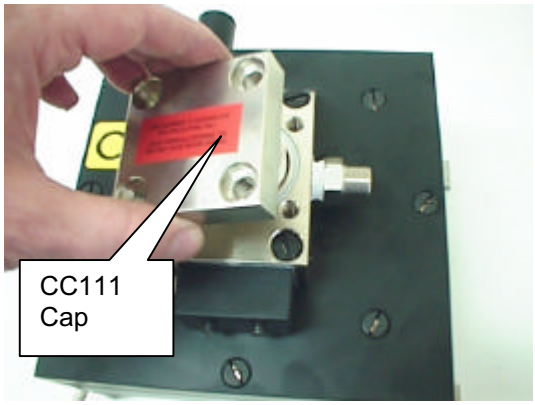

7. Remove and discard filter (FA44). Remove spring (SL75), retainer (RE82) and inlet valve (VA50) as an assembly. Inspect the inlet valve for damage. Clean or replace as necessary. Put valve assembly to one side.

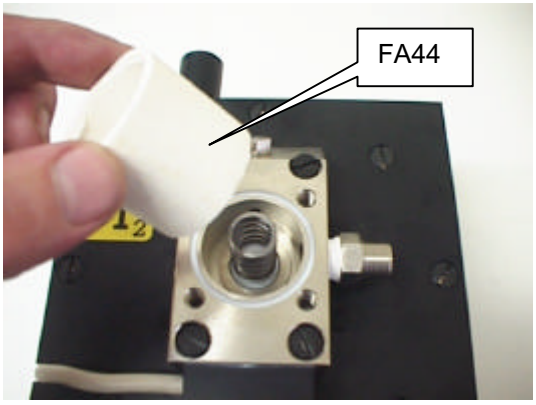

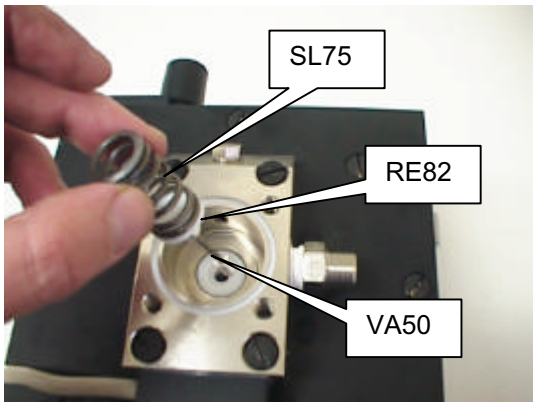

8. Remove four screws (SM133) from inlet block (BK83) and remove inlet block.

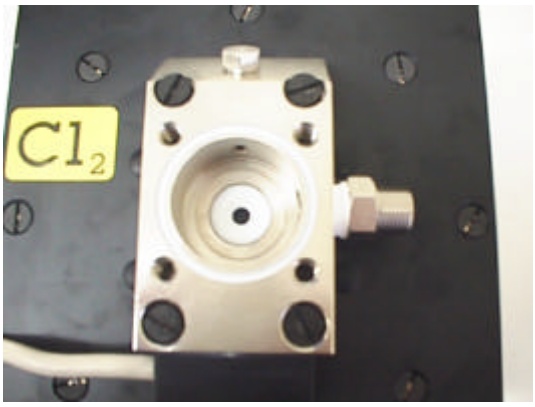

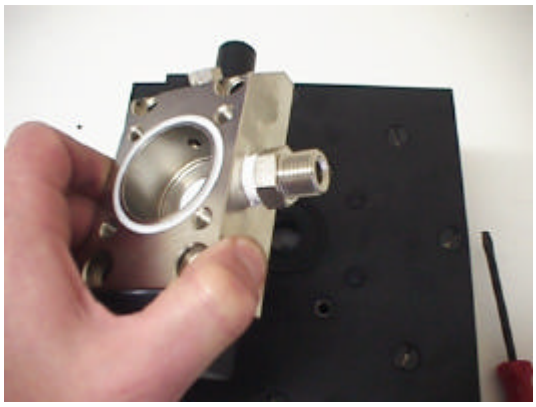

9. Push valve seat (SD104) out of inlet block. Replace O ring (OB107) and PTFE washer (WA64). Press seat back into inlet block and set aside.

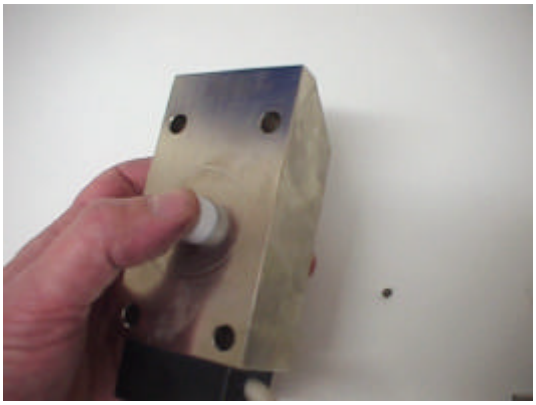

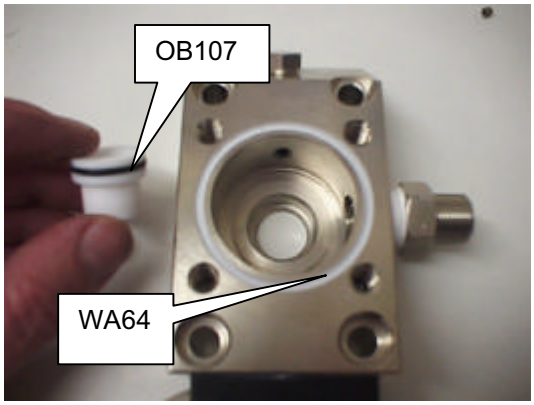

10. Unscrew and remove the eight nuts (NE128) securing front and back bodies. Remove front body.

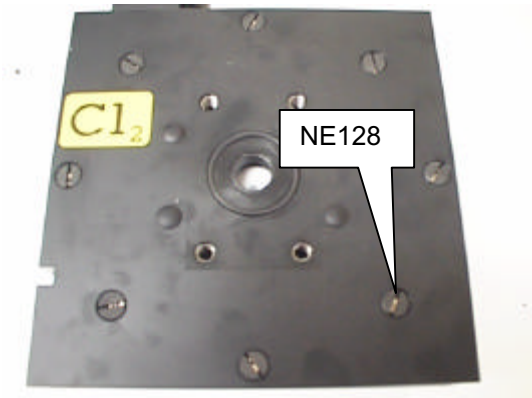

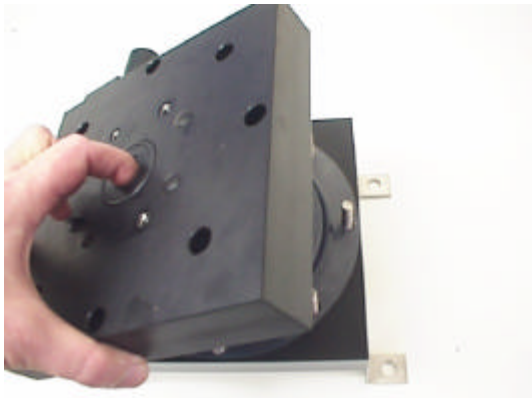

11. Replace O rings (OB112 and OB101) on the outside of the front body and O rings (OB111 and OB116) on the inside of the front body.

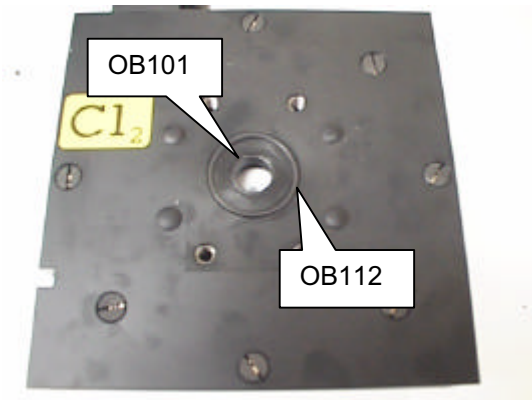

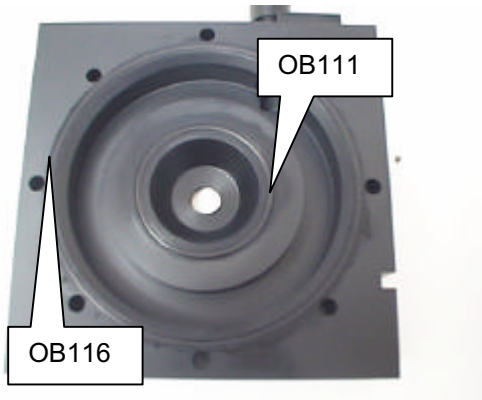

12. Lift the diaphragm assembly off of the eight studs. Press valve seat (SD103) out of the centre of the diaphragm assembly.

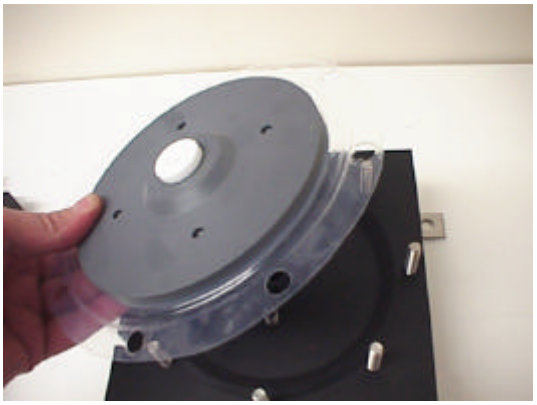

13. Replace O ring (OB106) on the valve seat. Using tools TE65, separate diaphragm plate (PF73) from diaphragm ring (RB45)

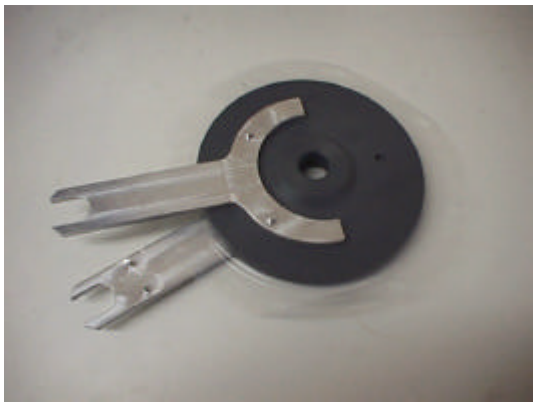

14. Replace diaphragm (DB38) and O ring (OB110). Rebuild diaphragm assembly. Do not over tighten diaphragm plate. Refit valve seat into diaphragm assembly and reposition onto eight studs in back body.

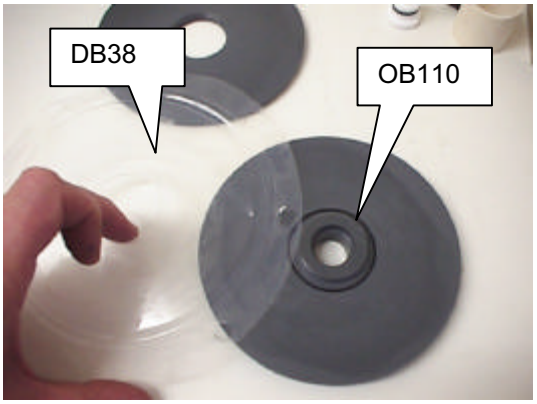

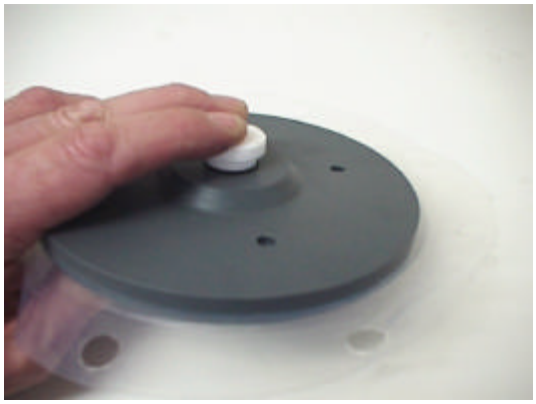

15. refit front body to back body, ensuring correct orientation, and secure with eight nuts. Refit inlet block and secure with four screws.

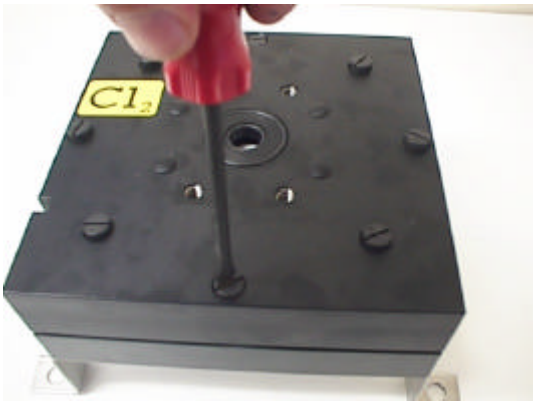

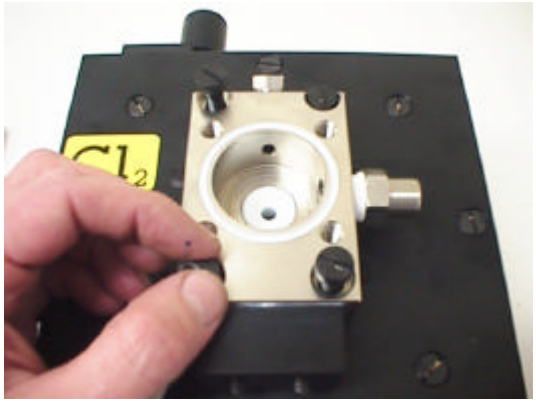

16. Refit gas valve assembly back into inlet block. Fit a new filter (FA44).

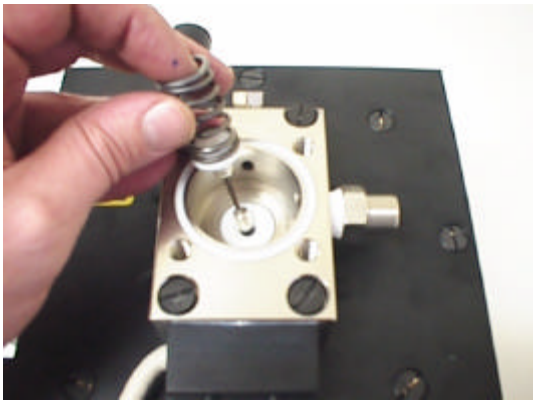

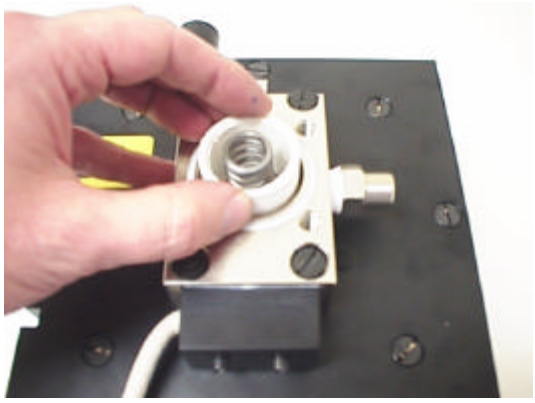

17. Fit filter cap onto inlet block and secure with four screws

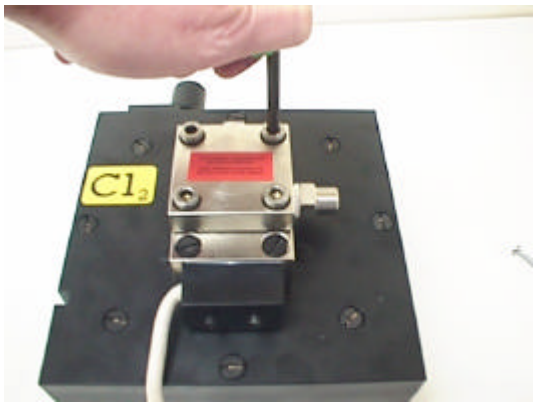

18. The vacuum regulator can now be secured to the wall and the gas inlet and vacuum pipes re connected.

CLYDE

Gas Dosing 25g - 12kg/hr

The Portacel Clyde is a manual, vacuum operated, gas doser. It is available as a wall or yoke mounted unit and has a dosing range from 25 g/hr to 4.0 kg/hr. The Clyde LC is also available in a yoke mounted form with a dosing range from 5.0 kg/hr to 12 kg/hr,
The Clyde is ideal for low demand applications as well as larger municipal installations.
Its simple operation offers optimum performance without the need for constant supervision.

- Safe operation, gases metered by vacuum principle
- Minimal maintenance - few moving parts
- A wide operating capacity of 25g to 12 kg per hour
- No constant supervision required
- Accurate, reliable dosing using proven technology
- Corrosion resistant materials ensure durability and reliability
- Modular design gives simple installation and operation

PORTACEL

CLYDE

HOW IT WORKS

The Clyde doser consists of a vacuum regulator and a gas meter tube. It is possible to either close couple or remote mount the meter tube. Operation of the regulator requires a vacuum which is generated by a high pressure water flow through a Portacel ejector.
The vacuum operates the diaphragm inside the vacuum regulator, opening the gas inlet valve, allowing the gas to enter the regulator. The gas is accurately metered through a manually operated, precision control valve and the flow is indicated on the meter tube.
Failure of the vacuum will result in the gas valve closing, this prevents any gas from escaping to the atmosphere so ensuring safe operation. Any excess build up of gas pressure is safely vented to atmosphere via the vent port. Visual indication is provided for the availability of gas and in the event of an exhausted gas supply, a secondary valve will shut down the Clyde to avoid excess vacuum being exerted upon the gas cylinder.

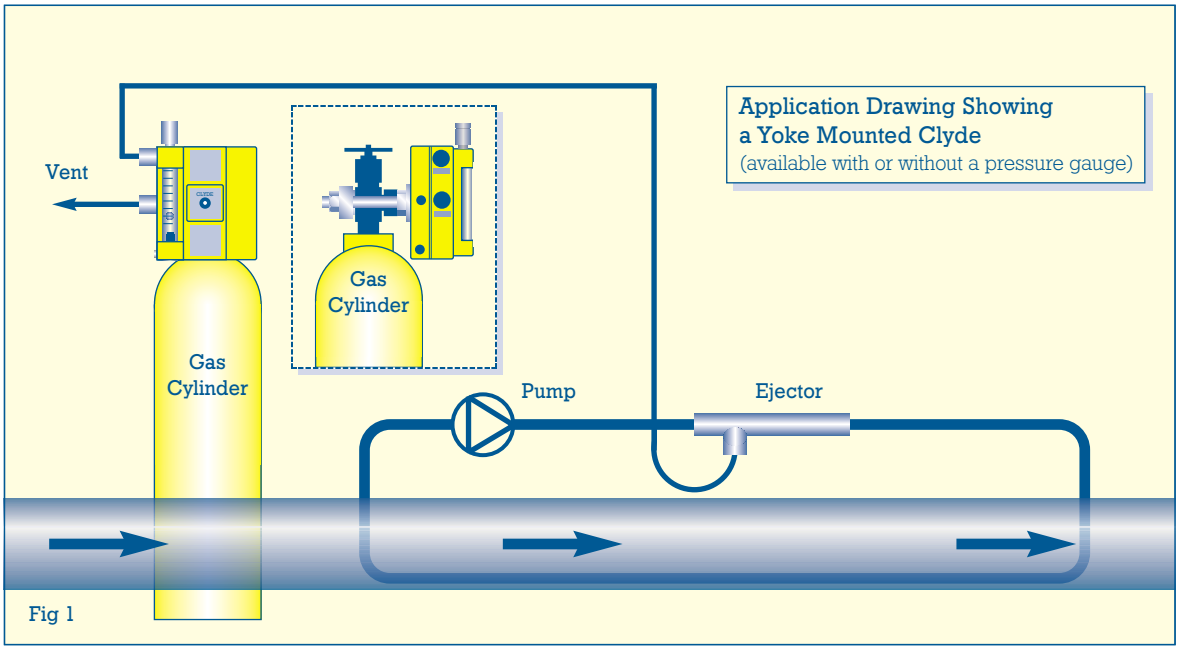

Fig 1

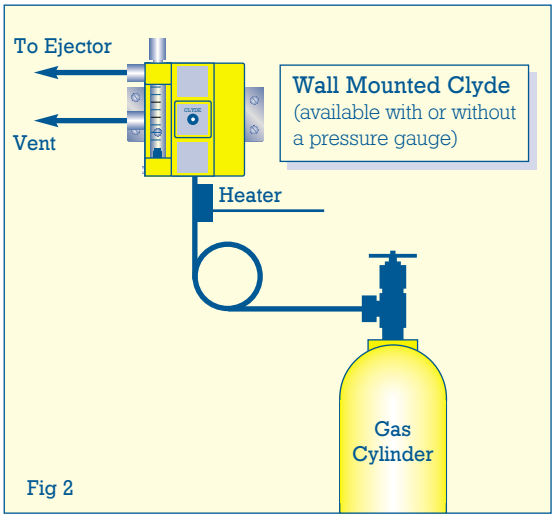

Fig 2

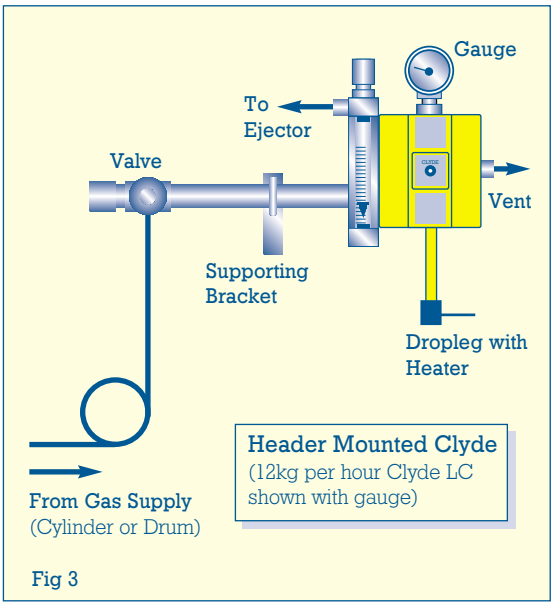

Fig 3

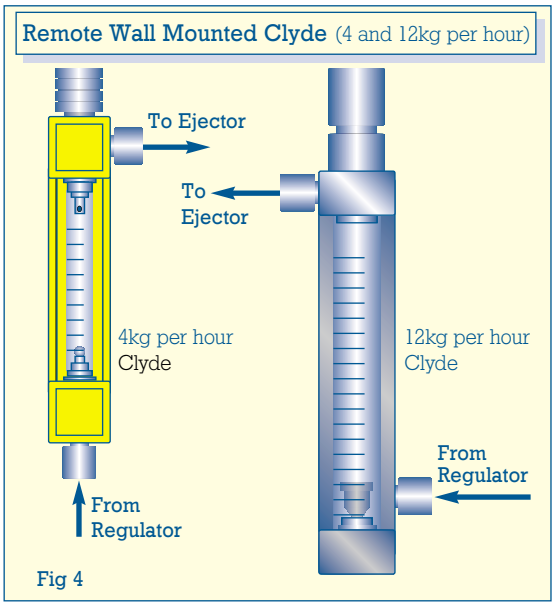

Fig 4

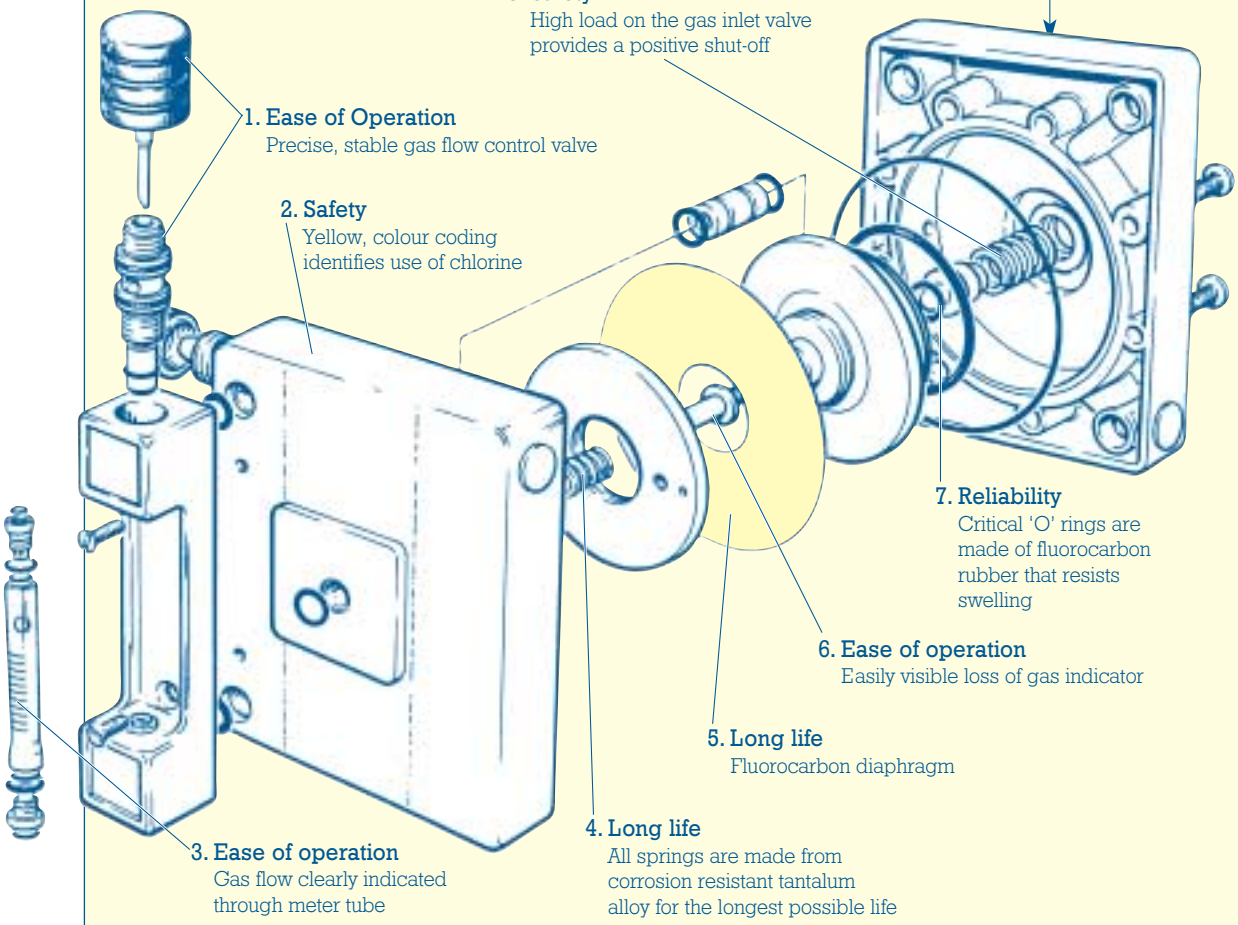

Fig 5

Technical Data

Chlorine Capacities	0.025, 0.08, 0.2, 0.5, 1.0, 2.0, 4.0, 5.0, 7.0, 10.0, 12.0 kg/hr	
Range	20:1 Manually adjusted. ± 4% at maximum flow	
Gas Design Pressure	20 Bar	
Max. Working Pressure	14 Bar	
Operating Temperature	0 - 45°C	
Connections	Wall Mounted	1/4" BSP
	Yoke Mounted	5/8", 1/2" and 3/4" BSP, 3/4" NGO and 1" BSW
	Vent Connections	3/8" O/D x 1/4" I/D EVA tubing
	Vacuum Connections	4kg - 3/8" O/D x 1/4" I/D EVA tubing 12kg - 1/2" O/D x 3/8" I/D EVA tubing
Heater	Supplied as standard on wall mounted models **Not** available on yoke mounted models	
Pressure Gauge (Optional)	60 mm dia. Bourdon Tube movement with monel diaphragm protective seal, calibrated 0 - 14 Bar	

Technical Specification

The chlorinator shall be a Clyde model manufactured by Portacel. The Clyde shall be vacuum operated with a capacity of (_____) kg/hr. The Clyde shall be (Wall/Yoke) mounted and connection to the ejector shall be by plastic tubing. A safety vent shall be provided to prevent excess pressure occurring within the Clyde. The feed range shall be manually adjusted over a 20:1 operating range and shall be indicated on a glass variable area flow meter. Chlorine supply status shall be indicated by means of a loss of gas indicator operated by the vacuum regulator.

Further Information

For further information concerning the Portacel Clyde Doser or any of the other products offered by Portacel please contact the address and telephone number shown below.

Product Weights & Dimensions

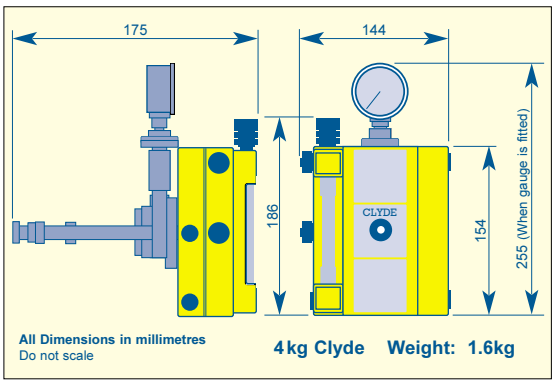

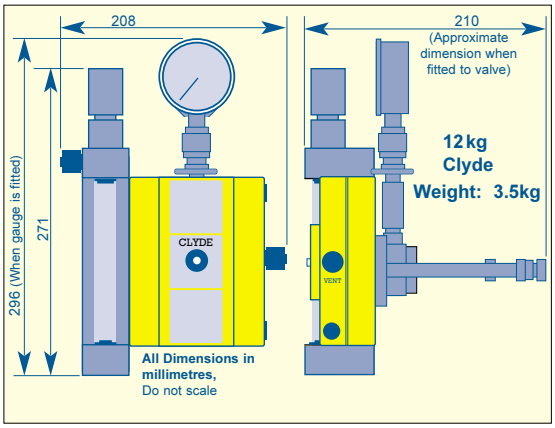

Portacel
Winnall Valley Road
Winchester, Hampshire
SO23 0LL U. K.
Tel: +44(0)1962 705200
Fax: +44(0)1962 705279
A part of T M Products Limited.

PORTACEL
DISINFECTION SYSTEMS

We reserve the right to change the design and specification without notice © T M Products Limited. Port DS. 001. 5k. 2.97

Chapter 1

Introduction

The **PORTACEL 'CLYDE CHLORINATOR'** is designed to control and meter the rate of flow of a supply of chlorine gas. A control valve provides simple manual adjustment which, once set, will provide a constant flow rate.

This instruction manual has been produced to enable the user to obtain maximum service from the instrument. It comprises installation, operation, maintenance and spare parts information.

Our guarantee is conditional upon the equipment being used in accordance with the contents of this instruction manual and we therefore invite particular attention to it and urge that it be rigidly followed.

WARNING:

THIS EQUIPMENT IS DESIGNED FOR USE WITH GASEOUS CHLORINE

CHEMICAL LIQUID CARRY OVER INTO THE UNIT WILL CAUSE SEVERE DAMAGE AND WILL INVALIDATE THE WARRANTY

COPYRIGHT

© Portacel Disinfection Systems 2001

All rights reserved. No part of this publication may be reproduced, stored in a retrieval system, or transmitted in any form or by any means, electronic, mechanical, photocopying, recording or otherwise, without the prior permission of Portacel Disinfection Systems.

Chapter 2

Chlorine

Contents

Para.		Page
1.	CHEMICAL & PHYSICAL PROPERITES	7
2.	CHLORINE CONTAINERS	8
3.	WITHDRAWL RATES	8
4.	HANDLING OF CHLORINE CONTAINERS	8
5.	CHLORINE LEAKS	8

2.1 CHEMICAL & PHYSICAL PROPERTIES

Chlorine is one of the chemical elements. Neither the gas or liquid is explosive or flammable both react chemically with many substances. Chlorine gas has a characteristic odour and greenish yellow colour. Chlorine gas is about two and one half times heavier than air and, therefore, if it escapes from a container or system it will seek the lowest level. Liquid chlorine is a clear amber colour and is about one and one half times heavier than water. At atmospheric pressures liquid chlorine boils at about -34 C (-30 F), and freezes at about -101 C (-150 F). One volume of liquid, when vaporised, will produce about 460 volumes of gas. Chlorine is extremely corrosive when in contact with moisture.

2.2 CHLORINE CONTAINERS

Chlorine is supplied in cylinders of 33 kg (72 lb) or 71 kg (157 lb) capacity for general use or in 864 kg (17 cwt) drums for large quantities.

The approximate dimensions of containers are: -

1.	33	kg	(72 lb) cylinder	1090mm x 230mm dia.
2.	71	kg	(157 lb) cylinder	1190mm x 270mm dia.
3.	864	kg	(17 cwt) drum	1730mm x 860mm dia.

The approximate gross weights of the above are: -

1.	72.5	kg	(159 lb) plus	1.kg (3 lb) for the dome
2.	101.5	kg	(224 lb) plus	1.5 kg (3 lb) for the dome
3.	1484	kg	(3271 lb) plus	8 kg (17 lb) for the dome

2.3 WITHDRAWAL RATES

Chlorine gas compresses into a liquid at comparatively low pressures. The gauge pressure varies according to the temperature and may be as much as 6 to 7 bar (90 to 100 p.s.i.) during hot weather and as low as 2.75 bar (40 p.s.i.) during cold weather. The temperature pressure curve gives an indication of the gauge pressure at temperatures within the chlorine container.

The pressure in the container keeps the chlorine in liquid form. Opening the container valve relieves the pressure causing the liquid to convert into a gaseous form. The chlorine gas then passes to the chlorinator.

The evaporation of chlorine from liquid to gas requires heat. The heat is obtained from the surrounding atmosphere through the walls of the container. When the container valve is opened, permitting liquid chlorine to change to gas, a cooling of the liquid occurs resulting in a lowering of the pressure within the container. If the gas is drawn of too rapidly, frost will appear on the outside of the container, thus retarding the passage of heat.

Chlorine containers are filled to suit the climatic conditions of the area in which they are to be used. In temperate climates the filling ratio is arranged so that 5 free space is available on a full container at a maximum temperature of 45 C (113 F).

In hot climates the filling ratio is reduced to ensure that 5 free space is available at a maximum temperature of 65 C (149 F).

The recommended withdrawal rates are as follows and are based on continuous withdrawal:

1.	33	kg	(72 lb) cylinder	-	0.9 kg hr (2.0 lb hr)
2.	71	kg	(157 lb) cylinder	-	1.4 kg hr (3.0 lb hr)
3.	864	kg	(17 cwt) drum	-	7.0 kg hr (15.0 lb hr)

If the withdrawal is intermittent a considerable increase in the above rates is permissible, depending on the room temperature, the period of operation and cycle of operation.

The number of cylinders required to give the correct withdrawal rate should be ascertained according to the figure shown in the above table, e.g. for a 2.0 kg hr instrument three 33 kg cylinders or two 71 kg cylinders should be used.

Always ensure that, when more than one container is in use, adequate precautions are taken to maintain all the containers at the same temperature. Unequal temperatures between cylinders will cause an unbalanced pressure condition resulting in reliquification of the gas in the cooler container.

A correct temperature relationship must be maintained between the chlorine containers, the conducting header pipework and the chlorinator itself. This relationship should always be equal, or on a rising temperature gradient, i.e. the chlorinator should always be at a higher temperature than the delivery pipework and the delivery pipework, in turn, should be at a higher temperature than the chlorine containers. Should a temperature drop occur between the container(s) and chlorinator it is possible for the gas to reliquify resulting in a corrosive attack on the components.

A necessary precaution should be taken within the chlorinating room itself, or container storage room, to prevent direct heat impinging upon the containers

and header pipework they must also be protected against cold draughts. The installation of cylinders must always be given careful consideration, ensuring that the direct rays of the sun do not at any time fall upon them. If a window is situated within the room, which will allow sunlight to fall upon the containers, it must be adequately screened. If heaters are used within the storage room ensure that the heat is not directed straight onto the containers, but provides an all round, even temperature. If it is unavoidable that there is a slight decrease in temperature between the containers and chlorinator, it is advisable to fit a pressure reducing valve adjacent to the containers within the header pipework.

The recommended minimum temperature for housing chlorine containers is 15 C (59 F), and heating should be provided to ensure that the temperature does not fall below this figure. As previously mentioned, the chlorinator pipework and header pipework must always be a degree or two above the room housing the containers. The maximum temperature at which the containers may be housed is 45 C (113 F) in temperate climates and 65 C (158 F) in hot climates. It must be stressed that, to ensure a trouble-free installation, an increasing temperature gradient between the containers and chlorinator must always be maintained.

WARNING:
NEVER *heat or stand in hot water chlorine containers in order to produce a greater withdrawal rate.*

2.4 HANDLING OF CHLORINE CONTAINERS

The following points provide a general guide in the safe handling of chlorine containers:

a) Always treat a chlorine container with the utmost care.

b) DO NOT drop containers or allow them to strike each other.

c) DO NOT use containers as rollers or supports, only use them for the purpose they were intended.

d) Open container valves slowly using the correct tool and without using undue force. Rather than use force on a resisting main valve placing a cloth soaked in boiling water over the valve will usually ease it.

e) Connect only those valves and connections supplied by the chlorinator manufacturer. The use of unauthorised fittings is dangerous.

f) DO NOT store chlorine containers where they will be subjected to temperatures in excess of the rated maximum or minimum or where a fire hazard exists. Cylinders must be stored vertically.

g) When returning empty containers ensure that the valves are closed, the caps are replaced on the valve outlets and the covering dome is screwed or bolted in position.

2.5 CHLORINE LEAKS

Chlorine can easily be detected by its sharp pungent odour, which is extremely irritating to the nose and eyes. The presence of this odour around an installation indicates a leak, which must receive immediate attention. A leak, which is allowed to persist, will increase rapidly in size, resulting in corrosion and possible destruction of the place in which it occurs. The method of tracing leaks is detailed under Gas Leaks Section 4.2.1 in the Operation Section.

Operating personnel should familiarise themselves with the first aid procedures necessary for persons overcome with chlorine gas, these being described on the chlorine manufacturer s instruction card.

NOTE:
Before coupling a fresh cylinder to the chlorinator remove the cap and operate the valve before unscrewing the blank hexagon nut. If there is any tendency for the valve to stick, tap the spindle lightly by means of a piece of hard wood or hammer. When the valve is working freely, it should be closed, tightly, the blank nut removed (emitting a slight puff or gas), and the thread and joint face thoroughly cleaned.

For information on chlorine cylinders and on chlorine gas refer to the manufacturer s instructions.

Chapter 3

Installation Instructions

Contents

Para.		Page
1.	**LOCATION REQUIRMENTS**	**12**
2.	**UNPACKING THE EQUIPMENT**	**12**
3.	**ASSEMBLING THE EQUIPMENT**	**12**
3.1	DIRECT C LINDER MOUNTING	
3.2	WALL MOUNTED	
3.3	CHLORINATOR WITH REMOTE VACUUM REGULATOR	
3.4	EJECTOR	
3.5	WATER SUPPL LINE	
3.6	SAFET VENT LINE	
3.7	VACUUM PIPE INTERCONNECTION	

A carefully considered and correct installation will do much toward ensuring the satisfactory performance of the equipment.

1. LOCATION REQUIREMENTS

When selecting a location for the Clyde Chlorinator the following criteria should be kept in mind:

a) That an adequate supply of clean water is necessary to operate the ejector.

b) That the solution discharge line, to the point of application, should be as short as possible with a minimum of obstacles to bypass (head loss).

c) That the safety vent line must be run to an external point where an exhaust of gas will not create a hazard to personnel safety. The end of the vent line should be turned down to prevent an ingress of moisture.

d) That ready access to the instrument is a necessity for its control of operation and routine maintenance.

e) That gas containers are heavy the equipment location should be chosen to give the shortest gas supply line, consistent with the safe handling of containers.

f) To avoid reliquification of the gas in the supply line the ambient temperature around the chlorinator should be as warm as, or warmer than, that around the gas containers. Interconnecting pipework should always be routed so that it is not subjected to draughts or direct sunlight which could cause excessively low or high temperatures at specific points.

2. UNPACKING THE EQUIPMENT

Whenever possible unpack the chlorinator and any accessories supplied, at the installation site, checking each item against the entries on the packing list. Ensure that the consignment is complete before discarding the packing material.

3. ASSEMBLING THE EQUIPMENT

3.1 DIRECT C LINDER MOUNTING

(a) Ensure that the cylinder is firmly secured in position using either a clamp unit or chain to secure the cylinder to a wall or when the gas used is monitored by the loss of weight secure the cylinder to the scale.

(b) Unscrew and remove the valve protection cap from the cylinder.

(c) Ensure that the cylinder valve is fully closed.

(d) Remove the protective cap from the cylinder outlet connection.

(e) Remove the plug from the desired manifold connection point.

(f) Screw the connector into the manifold.

(g) Keeping the instrument positioned vertically screw the connector union nut onto the cylinder outlet connection using the correct size of washer.

3.2 WALL MOUNTED

When wall mounting the chlorinator it should be located adjacent to the gas containers (cylinder or drum).

If the chlorinator is to be mounted more than one metre from the gas container then additional header pipework will be required. When the distance between the chlorinator and gas container exceeds four metres it is recommended that a suitable gas pressure reducing valve be fitted in the gas supply line close to the container(s).

3.3 CHLORINATOR WITH REMOTE VACUUM REGULATOR

a) Mount the vacuum regulator on to the cylinder as described in Section 3.3.1

b) Screw the remote mounted flowmeter and control valve assembly to the wall. Note that the arrow on the back plate should point upwards.

3.4 EJECTOR

Mount the ejector directly into a one inch BSP tapping in the pressurised water main or submerged into an open channel depending on the point of chlorine solution. It must be remembered that if the ejector is fitted directly into a pressurised water main then removal of the ejector for maintenance or replacement will necessitate isolating or shutting down the water main during the disconnection period. The alternative method is to fit a purpose made injection fitting into the main that permits withdrawal without the need to shut down supply. A solution hose or pipe is then connected between the injection fitting and the ejector, which is mounted on an adjacent wall.

3.5 WATER SUPPL LINE

The operating water supply must be connected to the ejector nozzle tube.

3.6 SAFET VENT LINE

Secure the 6mm bore vent tube to the vent connections.

The vent line MUST be run to a point OUTSIDE the building where a possible discharge of gas will not create a hazard to personnel.

DO NOT terminate the vent line in areas frequented by personnel (external work areas, footpaths) nor adjacent to windows or ventilation system intakes.

The vent line should be run without traps and the free end turned downwards to prevent an ingress of moisture. It is recommended that a suitable warning plate be affixed adjacent to the discharge point, e.g. WARNING – CHLORINE FUMES.

When more than one chlorinator has been supplied run each vent line separately to atmosphere. DO NOT use a common manifold for more than one vent line.

3.7 VACUUM PIPE INTERCONNECTION

When the chlorinator and ejector have been installed, as previously described, connect the plastic tubing as follow: -

a) Remove the tube nut on the chlorinator from the connection marked EJECTOR .

b) Place the tube nut over the 6mm bore plastic pipe.

c) Push the plastic pipe over the tapered spigot exposed by the removal of the tube nut.

d) Screw the tube nut back in place, hand tight.

e) Connect the other end of the plastic pipe to the top of the ejector as described in Steps (a) to (d).

NOTE:
If a remote regulator has been supplied, connect an additional length of 6mm bore plastic pipe between the connection on the regulator marked 'OUTLET' and the bottom inlet connection on the Remote Meter Tube assembly. The top side outlet connection is then on to the ejector.

Chapter 4

Maintenance

Contents

Para.		Page
1.	**THEORY OF OPERATION**	**16**
2.	**PREPARATION FOR OPERATION**	
2.1	GAS LEAKS	
2.2	POINT OF APPLICATION	
2.3	EJECTOR	
2.4	CHLORINATOR	
2.5	GAS SUPPL LINE	
3.	**ROUTINE OPERATION**	
3.1	TO START	
3.2	TO STOP FOR SHORT PERIODS	
3.3	TO STOP FOR EXTENDED PERIODS	

1. THEORY OF OPERATION

The chlorinator has been designed to control and indicate the rate of flow of gas, to provide a simple means of setting the flow rate at any value within the range of the unit, to mix the gas with water and to deliver the resultant solution to the point of application.

With the chlorinator, described in this manual, the function of the ejector is to produce a vacuum which draws the gas from the control unit and also to mix the gas with the water flowing through the ejector. A double check valve prevents a back flow of water into the chlorinator. Proper operation of the ejector is dependent upon the inlet pressure being sufficiently higher than the discharge pressure.

Gas under pressure from the cylinder(s) drum flows to the vacuum regulator this can be an integral part of the control unit or remote mounted. Either way the operation is the same. At this point the gas pressure is reduced to less than atmospheric because the valve will not open unless the ejector is creating a vacuum. This provides a controlled vacuum on the upstream side of the control valve. If, for any reason, the vacuum regulator should pass gas when a vacuum is not being created, the diaphragm assembly, acting against the relief valve, will be pushed to one side allowing gas to be exhausted out through the safety vent line.

The gas from the vacuum regulator passes through a flowmeter tube (feed rate indicator) causing the float to indicate the rate of gas flow on an easily read scale. The rate of flow of gas is controlled by the control valve stem.

In the event of a failure of the gas supply the ejector will create an over-vacuum situation which draws the diaphragm assembly until the O ring on the carrier seals off the gas inlet.

2. PREPERATION FOR OPERATION

When all connections specified in Section 3, Installation, have been made, the following pre-start checks must be carried out: -

2.1 GAS LEAKS

During the following procedures the operator is required o test the complete system for gas leaks to ensure that all connections are secure and that the equipment is safe.

WARNING: **It is recommended that breathing apparatus be worn during the gas leak testing operations.**

The recommended method of testing for gas leaks is to apply ammonia vapour to the area under test any escaping gas will combine with the ammonia to form dense white clouds of ammonium chloride. Ammonia vapour is obtained by

holding an unstoppered bottle of ammonia solution adjacent to the test joint. If the area to be tested is inaccessible to a bottle blowing across a small swab or pipecleaner soaked in ammonia solution will prove adequate.

WARNING: *DO NOT apply ammonia solution directly to the joint under test.*

2.2 POINT OF APPLICATION

If the point of application is in a main through a withdrawable injection fitting and gate valve, the valve must be open. The solution tube should be pushed in until the end is just short of the centre of the main. In the case of large mains the tube may be pushed in as far as it will go. With small mains it may be necessary to cut the tube to the required length.

2.3 EJECTOR

i. Turn on the water supply to the ejector and check it and the pipework for leaks.

ii. An indication of proper ejector operation can be obtained by removing the vacuum tubing from the ejector connection and placing a finger over the opening.

iii. If the ejector vacuum cannot be detected, check that the operating water pressure and back pressure (including the solution tube friction losses) are as per the original specification. Check that the ejector nozzle is not blocked.

2.4 CHLORINATOR

If the ejector check shows very little or no vacuum was detected and the ejector was found to be working properly, there is most probably a leak in the chlorinator. If the leak(s) is are upstream of the flowmeter (this may be indicated by movement of the float) tighten the gas inlet connection.

With no leaks upstream of the flowmeter the loss-of-gas indicator will read NO GAS and the float in the flowmeter will remain at the bottom.

Turn off the water supply to the ejector and disconnect the vacuum tubing at the chlorinator a slight hiss will be heard as air re-enters the chlorinator. Re-connect the vacuum tubing.

2.5 GAS SUPPL LINE

WARNING: *Before carrying out the gas supply line leak test ensure that the ejector is creating a vacuum so that in the event of a gas leak the chlorine in the pipe can be discharged.*

i. Open all gas line valves except the cylinder drum valve and the next valve in the line. This will ensure that if a gas leak is detected only one valve need be opened to discharge the gas to the point of application.

ii. Crack open and then close the main cylinder drum valve and check up to the next valve for leaks. If a leak is detected open the closed line valve and exhaust the gas. Rectify the leak.

iii. If no leaks were discovered in Step (ii) open the next valve in the line, if there is one, and then close it again and test for leaks to the next valve in the system.

iv. Repeat Step (iii) for each valve in the system.

3. ROUTINE OPERATION

3.1 TO START

i. Ensure that the point of application is open to receive solution.

ii. Turn on the water supply to the ejector.

iii. Open the cylinder drum valve(s) and any other gas line valves. The gas pressure gauge, supplied as an optional extra, will indicate the cylinder drum pressure.

iv. Set the chlorine dosage rate by adjusting the control valve. The reading is taken by lining the top of the float up with the graduation lines.

3.2 TO STOP FOR SHORT PERIODS

i. Turn off the water supply to the ejector.

NOTE: If the chlorinator is to be employed on intermittent stop start control this action can be performed via a solenoid valve fitted in the operating water supply line.

3.3 TO STOP FOR EXTENDED PERIODS

If the chlorinator is to be shut down for maintenance purposes, or any period exceeding 24 hours, the following procedure should be adopted: -

i. Close the main cylinder drum valve.

ii. Wait until the loss-of-gas indicator button retracts into the front body then shut off the water supply to the ejector.

WARNING: *If a gas pressure gauge is fitted, DO NOT rely on zero reading as an indication that the chlorinator is ready for removal from the gas supply.*

iii. Disconnect the solution delivery hose, if fitted, from the ejector and plug the open end.

WARNING: DO NOT *use the control valve to isolate the gas supply.*

Chapter 5

Maintenance Instructions

Contents

Para. **Page**

1. ROUTINE MAINTENANCE
1.1 GENERAL CARE OF E UIPMENT
1.2 GAS LEAKS
1.3 MOISTURE
1.4 PLASTIC PARTS
1.5 WATER LEAKS
1.6 CLEANING OF PARTS
1.7 TOOLS
1.8 GASKETS

2. SERVICE NOTES
2.1 EJECTOR CLEANING (DEMOUNTABLE T PE)
2.2 VACUUM REGULATOR
2.3 CONTROL VALVE & FLOW METER

3. FAULT FINDING
3.1 FLOW METER FAILS TO INDICATE GAS FLOW
3.2 INSUFFICIENT EJECTOR VACUUM
3.3 GAS FLOW CANNOT BE CONTROLLED
3.4 FLOW METER CONTINUES TO INDICATE WHEN EJECTOR WATER IS STOPPED

4. SPARES KITS
4.1 Spares Kit Annual Maintenance Clyde AAS1405
4.2 Spares Kit Annual Maintenance Clyde Remote Meter Tube Fame AAS1447
4.3 Spares Kit Annual Maintenance Clyde LC AAS1467
4.4 Spares Kit Annual Maintenance Clyde LC Remote Meter Tube Frame AAS1468
4.5 Spares Kit Annual Maintenance 1” & 1 ” Ejectors AAS1368

5. List of Product Drawings

1 ROUTINE MAINTENANCE

1.1 GENERAL CARE OF E UIPMENT

The maintenance of the gas control unit is simplified if certain general precautions are taken. These are usually easy to accomplish and will eliminate costly maintenance and repairs by providing good operating conditions. The suggested precautions are as follows: -

1.2 GAS LEAKS

Chlorine and sulphur dioxide, when moist, are extremely corrosive. ALL metal parts in the control unit which normally come into contact with moist gas are made from materials which will withstand this corrosive action. Common metals are used where the part is exposed to dry gas. All connections should be checked once a day for signs of leaks using an unstoppered bottle of ammonia. ALL LEAKS MUST BE RECTIFIED IMMEDIATEL THE ARE DISCOVERED.

1.3 MOISTURE

When any connection is broken, even for a short time, the opening(s) should be plugged to prevent the entrance of moisture. Moisture must be excluded from any part which is normally exposed to dry gases only.

1.4 PLASTIC PARTS

Whenever threaded plastic parts are assembled fluorocarbon type grease should be used on the threads to prevent the parts from locking together. In general tools should not be used to make up plastic connections this type of connection should be made up by hand only.

1.5 WATER LEAKS

As a matter of routine maintenance no water leaks should be tolerated. ALL water leaks should be stopped immediately they are discovered.

1.6 CLEANING OF PARTS

If the valve stems, seats, diaphragms, flowmeter, hoses, gaskets or O seals should become contaminated with impurities sometimes found in gases they should be removed and cleaned.

ALL CLEANING SHOULD BE CARRIED OUT IN AN OPEN AREA OR A WELL VENTILATED ROOM.

(a) Most of the residue that accumulates can usually be removed with warm water and a detergent

(b) If further cleaning is necessary, metal, glass and ceramic parts may be washed in methy-chloroform (1,1,1 – trichloroethane). Plastic parts should be cleaned only with warm water and a detergent followed by methylated spirits (if necessary).

Carbon tetrachloride and trichlorethylene are satisfactory cleaning agents but their use is NOT RECOMMENDED BECAUSE OF THE POSSIBLE TOXIC EFFECTS OF EXPOSURE TO THEIR FUMES. DO NOT USE WOOD ALCOHOL, ETHER, PETROL OR PETROLEUM DISTILLATES.

(c) All traces of solvent and moisture must be removed from parts which come into contact with gas before being returned to service. Do not use heat on plastic or hard rubber parts.

1.7 TOOLS

When working with screw, nuts, bolts and any hardware, use the correct size tool to avoid damage. This precaution will make it easier to remove the components when necessary. Always use two spanners when making gastight connections to avoid possible damage to pipelines.

1.8 GASKETS

A plentiful supply of gaskets should always be held in stock so that all gasket points may be maintained in perfect condition. A regular replacement programme of gaskets will do much to eliminate operating difficulties.

2. SERVICE NOTES

2.1 EJECTOR CLEANING (DEMOUNTABLE T PE)

In areas where the operating water supply has a high mineral content it is necessary, at regular intervals, to dismantle the ejector nozzle for cleaning. Failure to do so will result in a loss of ejector efficiency causing a reduction in the maximum obtainable flow through the chlorinator. To dismantle and clean the ejector proceed as follows: -

(a) Isolate the water supply to the ejector.

(b) Remove the ejector from the water supply line.

(c) Unscrew and remove the nozzle and throat clamping nuts, washers and bolts.

(d) Withdraw the nozzle from the nozzle tube.

(e) Using a small bristle brush or pipe cleaner remove the deposit from the nozzle DO NOT mark or damage the hole and never enlarge the size of the hole.

(f) Withdraw the throat from the main body and clean.

(g) Re-assemble the nozzle and throat ensuring that the O rings are in place and undamaged.

Method 2

i. Ensure the water and gas supplies are turned off.

ii. Unscrew and remove the plug and washer.

iii. Mark the back and front bodies so that when re-assembling the marks line up.

iv. Unscrew and remove the screws and separate the back body from the front body.

v. With soft jaws in a vice clamp the back body.

vi. Grip the valve and unscrew the valve inserting a screwdriver in the tapped hole exposed by the removal of the plug.

To dismantle the diaphragm assembly:

(a) With soft jaws in a vice clamp the diaphragm plate.

(b) Two holes have been drilled in the top of the diaphragm ring to facilitate the removal of the ring from the plate. The diaphragm can now be removed and inspected.

vii. Clean all parts as detailed in Section 5.1.6

Re-assembly

viii. When re-assembling valve do not attempt to screw the parts together under the spring load. The spring should be compressed by hand and the parts assembled with care.

ix. Use only fluorocarbon grease on moving parts.

2.3 CONTROL VALVE AND FLOWMETER

i. The control valve can be removed by unscrewing fully and withdrawing it from the threaded spigot

ii. The flowmeter is removed by unscrewing the adaptor.

(h) Gently tighten the retaining nuts and bolt. DO NOT over tighten.

(i) Re-connect the ejector into the water supply line and check its operation as detailed in Section 4.2.

2.2 VACUUM REGULATOR

The function of the vacuum regulator is to permit gas, at a positive pressure, to enter the instrument under a partial vacuum. It will also shut off the gas supply should the vacuum fail. Dependent upon which model has been supplied the regulator is either an integral part of the chlorinator or a separately constructed unit. No matter what arrangement is supplied the function and internal components are identical.

The vacuum regulator comprises a normally closed valve connected to a diaphragm, operated by the ejector vacuum downstream of the regulator. A spring is fitted to keep the valve closed and also to provide a load against which the diaphragm acts.

Should it become evident that the valve is not seating because of foreign matter or loss of spring tension the following procedure should be adopted for dismantling.

NOTE: All types of vacuum regulator chlorinator must be removed from the installation point prior to dismantling.

Modifications to the inlet assembly have been introduced to ease maintenance and assembly. Units supplied from January 1988 are likely to include this. Externally the inlet manifold, or universal adaptor assembly, looks the same for either model. If in doubt as to the method of disassembly the following check can be made: -

<u>Method 1</u>

i. Ensure the water and gas supplies are turned off.

ii. Unscrew and remove the screws holding the inlet manifold or universal adaptor to the regulator.

iii. Using gentle pressure try to separate the regulator from the inlet assembly. If the inlet will not separate, reassemble the fixing screws and use method two, otherwise continue.

iv. Grip the inlet assembly in a vice using soft jaws. Unscrew and remove the plug and washer.

v. Grip the valve and unscrew the valve by inserting a screwdriver in to the tapped hole exposed by the removal of the plug. The inlet valve assembly can now be dismantled.

3. FAULT FINDING

3.1 FLOWMETER FAILS TO INDICATE GAS FLOW

CAUSE	REMED
Gas supply valve(s) shut	Open supply valve(s)
Gas container(s) empty	Change container(s)
Strainer in gas inlet blocked	Clean or renew strainer
Control valve shut	Open control valve
Insufficient ejector vacuum	Refer to Section 5.3.2
Dirty flowmeter	Clean as detailed in Section 5.1.6
Vacuum regulator stuck	Refer to Section 5.2.2
Air leakage into system	Check all containers
Control valve blocked	Remove and clean

3.2 INSUFFICIENT EJECTOR VACUUM

CAUSE	REMED
Operating water valve shut	Open water valve
Solution line valve shut	Open solution valve
Dirty water strainer	Clean or renew strainer
Dirty ejector	Refer to Section 5.2.1
Blocked solution line	Clean or renew solution line
Incorrect hydraulic conditions	Increase operating water supply pressure or reduce back pressure

3.3 GAS FLOW RATE CANNOT BE CONTROLLED

CAUSE	REMED
Condensed gas vapours	Incorrect temperature
(Liquid Chemical) in instrument	Relationship between the container and instrument
Dirty vacuum regulator	Refer to Section 5.2.2

3.4 FLOWMETER INDICATES FLOW WHEN GAS IS TURNED OFF

CAUSE	REMED
Air leaking into instrument upstream of flowmeter	Check all connections

3.5 FLOWMETER CONTINUES TO INDICATE WHEN EJECTOR OPERATING WATER IS STOPPED

CAUSE	REMED
Vacuum equalising in instrument (Low capacity units only)	None required. This is permissible on low capacity Instruments
Vacuum regulator valve not closed	Refer in Section 5.2.2
Solution line draining back when back pressure is zero or below atmospheric	Fit a vacuum breaker or anti-syphon device or move the point of application

4. SPARES KIT

4.1 Spares Kit Annual Maintenance Clyde AAS1405

Description	Part Number	uantity
Diaphragm	DB32	1 off
Strainer	FA32	1 off

‘O ring	OB2	2 off
‘O ring	OB26	2 off
‘O ring	OB43	1 off
‘O ring	OB44	5 off
‘O ring	OB46	1 off
‘O ring	OB91	1 off
‘O ring	OB92	1 off
‘O ring	OB98	1 off
‘O ring	OB124	1 off
‘O ring	OB136	4 off
‘O ring	OB155	1 off
‘O ring	OB156	2 off
‘O ring	OB157	1 off
Washer	WA45	1 off
Washer	WA64	1 off

4.2 Spares Kit Annual Maintenance Clyde Remote Meter Tube Frame AAS1447

Description	Part Number	uantity
O Ring	OB2	2 off
O Ring	OB26	2 off
O Ring	OB43	1 off
O Ring	OB98	1 off
O Ring	OB136	2 off
O Ring	OB155	1 off

O Ring	OB156	2 off

4.3 Spares Kit Annual Maintenance Clyde L.C AAS1467

Description	Part Number	uantity
Diaphragm	DB32	1 off
Strainer	FA32	1 off
O Ring	OB44	1 off
O Ring	OB46	2 off
O Ring	OB67	2 off
O Ring	OB91	1 off
O Ring	OB92	1 off
O Ring	OB124	1 off
O Ring	OB136	2 off
O Ring	OB157	1 off
O Ring	OB158	4 off
Washer	WA45	1 off
Washer	WB89	1 off

4.4 Spares Kit Annual Maintenance Clyde L.C. Remote Meter Tube Frame AAS1468

Description	Part Number	uantity
O Ring	OB46	1 off
O Ring	OB67	2 off
O Ring	OB158	2 off

4.5 Spares Kit Annual Maintenance1” & 1½” Ejectors AAS1368

Description	Part Number	uantity
O Ring	OB80	1 off
O Ring	OB82	1 off
O Ring	OB94	1 off
O Ring	OB95	1 off

5. List of Product Drawings

PRODUCT	DRAWING NUMBER
Flow diagram	----------
Clyde Cl2 – Cylinder Mount	A1 7112
Clyde Cl2 – Cylinder Mount (with gauge)	A1 7113
Clyde Cl2 – Wall Mount	A1 7114
Clyde Cl2 - Wall Mount (with gauge)	A1 7115
Clyde Cl2 – oke Mount	A1 7116
Clyde Cl2 – oke Mount with gauge	A1 7117
Clyde Cl2 – Remote Meter Tube Frame	A2 5638
Clyde L.C. – oke Mount – Cl2 SO2	A1 7284
Clyde L.C. – oke Mount Cl2 SO2	A1 7291
Clyde L.C. Remote Meter Frame Assembly Cl2 SO2	A2 7283
1” Ejector	A2 6689
1 ” Ejector – Cl2 SO2	A2 6705
70mm Meter Tube Ends	A3 7004

The above drawings now follow in the remaining pages of this O&M Manual.

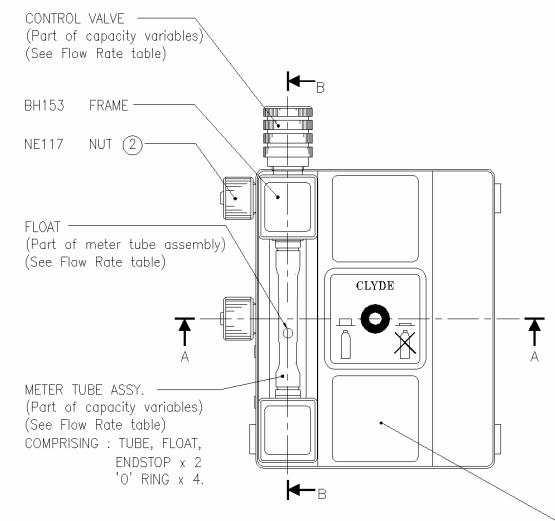

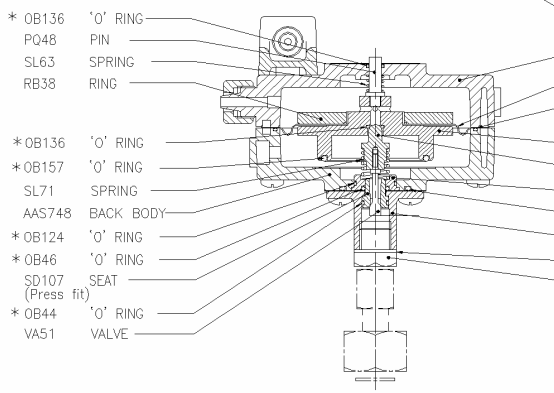

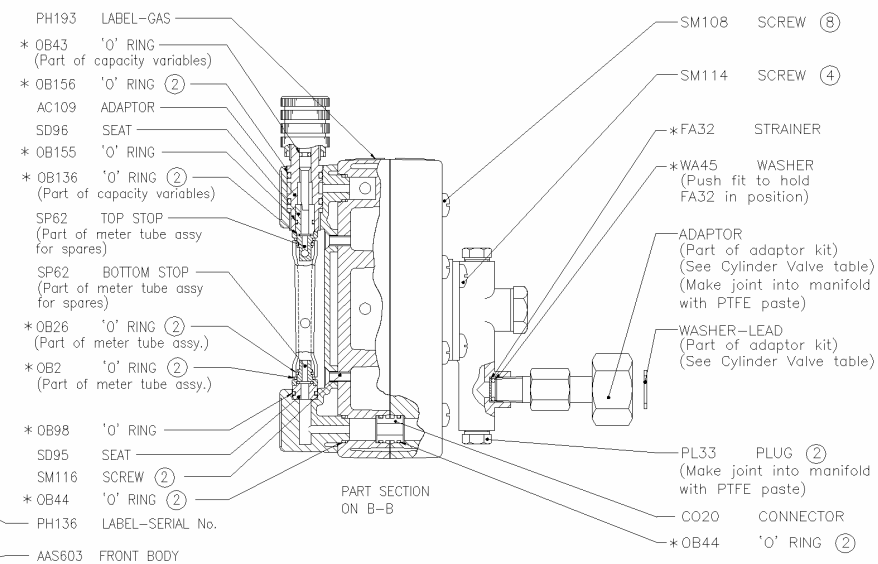

FLOW RATE g/h	CAPACITY VARIABLES PART No.
4000	AAS632
2000	AAS633
1000	AAS634
500	AAS635
250	AAS636
200	AAS637
80	AAS638
25	AAS639

METER TUBE ASSY.	CONTROL VALVE	FLOAT for spares
TK81	AAS285D	BB4
TK78	AAS285C	BA21
TK77	AAS285B	BA21
TK80	AAS285B	BA21
TK79	AAS285A	BA21
TK76	AAS285A	BA20
TK74	AAS285A	BA20
TK75	AAS285A	BA20

CYLINDER VALVE OUTLET	ADAPTOR KIT PART No.
5/8" BSP	AAS1039
3/4" BSP	AAS1040
3/4" NGO	AAS1041
1" BSW	41573

ADAPTOR for spares	WASHER –LEAD for spares
AB 89	WB 17
AB 91	WB 90
AB 94	WB 90
AB 93	WB 17

Note !

Special tools :

TE59 – Diaphragm alignment tool.

TE63 – Spanner for diaphragm plate & ring adaptor AC109 (2 required).

TE69 – Press tool for seat SD107.

Lubricate 'O' rings, inner & outer edges of diaphragm & plastic threads with chlorofluorocarbon grease.

Bench Tests :

Pressure test complete manifold assembly, before fitting to body, to 5 bar.– No leaks.

Vacuum test complete unit. Plug gas connection, evacuate unit through ejector & relief connection to 120mm Hg.–No leaks. Remove relief connection, re–evacuate to 120mm Hg. – No leaks.

Test Procedure – TP45

Instrument supplied with vent & vacuum tubing PB118 (20m).

Items marked * are in spares kit AAS1405.

Rev.	C.N.No.	Date	Drawn	Chkd./Authd.
3	P2096	13.4.00.	J.C.	A.W.C.
2	1620	22.10.97	TA	S.K.
1	ORIG	18.4.96.	R.E.S.	S.K.

CAD REF:– SERVER\ENGINEERING\DRAWINGS\CURRENT\7112_31

Material: –

Finish: –

THIRD ANGLE PROJECTION
DIMENSIONS IN mm UNLESS STATED.
REFER TO 'PORTACEL' ENGINEERING STANDARDS.
DRAWN GENERALLY IN ACCORDANCE WITH B.S.308
DO NOT SCALE. IF IN DOUBT – ASK.

PORTACEL DISINFECTION SYSTEMS ©

Portacel
Winnall Valley Road
Winchester
Hampshire
United Kingdom
SO23 0LL
A part of T M Products

Scale: 1;1

Title: 'CLYDE' CL2– CYLINDER MOUNT

Part No.: AAS1340

Drawing No.: A1 7112

Rev.: 3

© Copyright T M Products

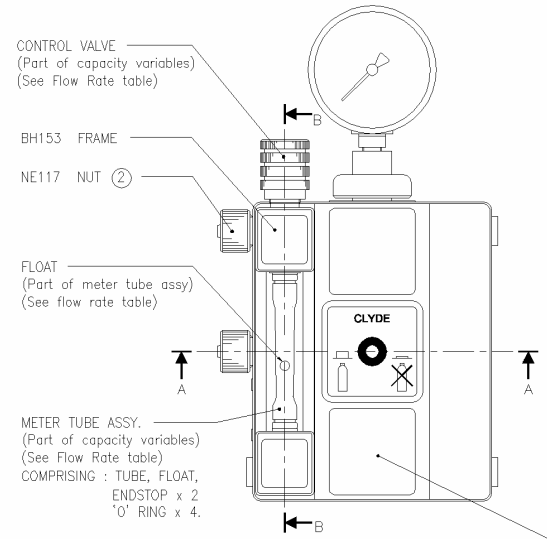

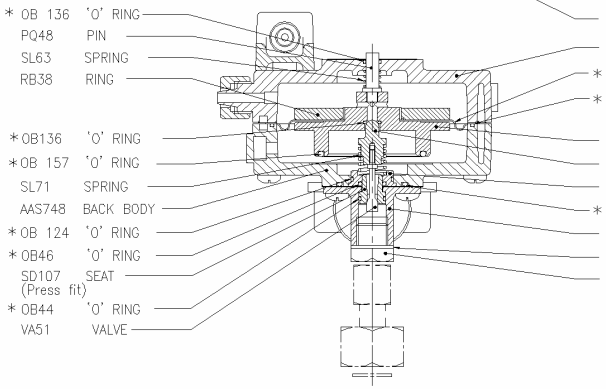

SECTION A–A

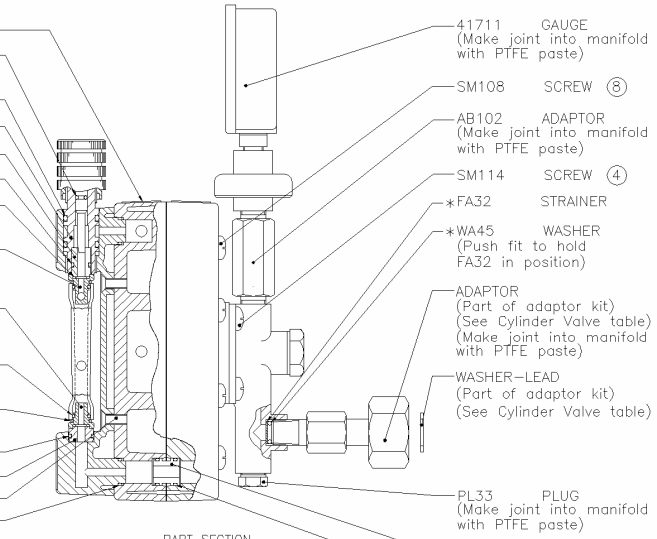

PART SECTION
ON B–B

FLOW RATE g/h	CAPACITY VARIABLES PART No.
4000	AAS632
2000	AAS633
1000	AAS634
500	AAS635
250	AAS636
200	AAS637
80	AAS638
25	AAS639

METER TUBE ASSY.	CONTROL VALVE	FLOAT for spares
TK81	AAS285D	BB4
TK78	AAS285C	BA21
TK77	AAS285B	BA21
TK80	AAS285B	BA21
TK79	AAS285A	BA21
TK76	AAS285A	BA20
TK74	AAS285A	BA20
TK75	AAS285A	BA20

CYLINDER VALVE OUTLET	ADAPTOR KIT PART No.
5/8" BSP	AAS1039
3/4" BSP	AAS1040
3/4" NGO	AAS1041
1" BSW	41573

ADAPTOR for spares	WASHER for spares
AB 89	WB 17
AB 91	WB 90
AB 94	WB 90
AB 93	WB 17

Note !

Special tools :

TE59 – Diaphragm alignment tool.

TE63 – Spanner for diaphragm plate & ring adaptor AC109 (2 required).

TE69 – Press tool for seat SD107.

Lubricate 'O' rings, inner & outer edges of diaphragm & plastic threads with chlorofluorocarbon grease.

Bench Tests :

Pressure test regulator–gauge union using dry air supply. Connect gas inlet to pressure source & open to 16bar. Isolate and observe no drop in pressure over 30 minute period.

Pressure test complete manifold assembly, before fitting to body, to 5 bar.– No leaks.

Vacuum test complete unit. Plug gas connection, evacuate unit through ejector & relief connection to 120mm Hg.–No leaks. Remove relief connection, re–evacuate to 120mm Hg. – No leaks.

Test Procedure – TP 45

Instrument supplied with vent & vacuum tubing PB118 (20m).

Items marked * are in spares kit AAS1405.

Rev.	C.N.No.	Date	Drawn	Chkd./Authd.
5	P2185	28.9.00.	J.C.	A.W.C.
4	P2096	13.4.00.	J.C.	A.W.C.
3	P1977	22.12.99	D.C.H.	A.W.C.
2	1620	22.10.97	TA	S.K.
1	ORIG	22.4.96.	R.E.S.	S.K.

CAD REF:– SERVER\ENGINEERING\DRAWINGS\CURRENT\7113_51

Material
–

Finish
–

THIRD ANGLE PROJECTION
DIMENSIONS IN mm UNLESS STATED.
REFER TO 'PORTACEL' ENGINEERING STANDARDS.
DRAWN GENERALLY IN ACCORDANCE WITH B.S.308
DO NOT SCALE. IF IN DOUBT – ASK.

PORTACEL DISINFECTION SYSTEMS ©

Portacel
Winnall Valley Road
Winchester
Hampshire
United Kingdom
SO23 OLL

A part of T M Products

Scale 1:1

Title 'CLYDE' Cl_2–CYLINDER MOUNT (WITH GAUGE)

Part No. AAS1341

Drawing No. A1 7113

Rev. 5

© Copyright T M Products

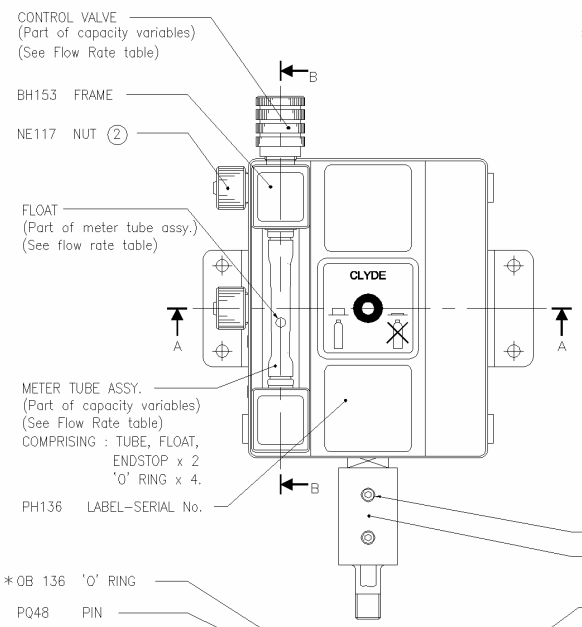

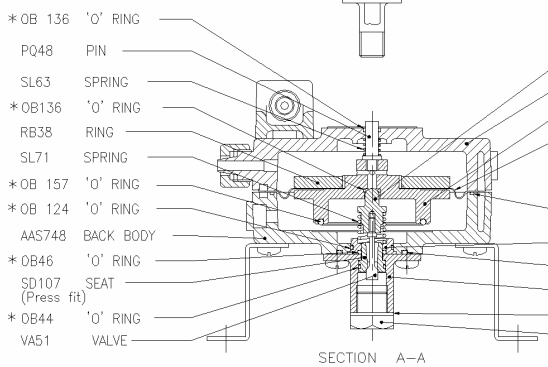

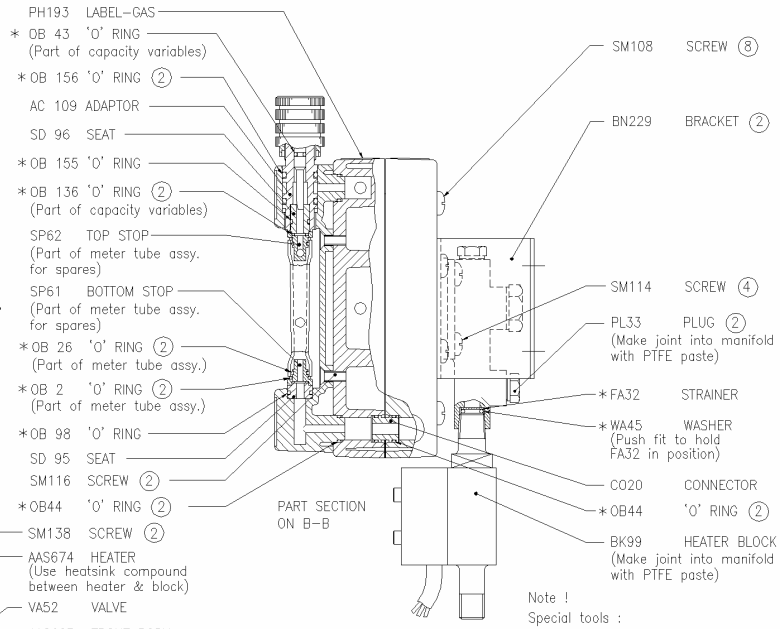

FLOW RATE g/h	CAPACITY VARIABLES PART No.	METER TUBE ASSY.	CONTROL VALVE	FLOAT for spares
4000	AAS632	TK81	AAS285D	BB4
2000	AAS633	TK78	AAS285C	BA21
1000	AAS634	TK77	AAS285B	BA21
500	AAS635	TK80	AAS285B	BA21
250	AAS636	TK79	AAS285A	BA21
200	AAS637	TK76	AAS285A	BA20
80	AAS638	TK74	AAS285A	BA20
25	AAS639	TK75	AAS285A	BA20

Note !

Special tools :

TE59 – Diaphragm alignment tool.

TE63 – Spanner for diaphragm plate & ring adaptor AC109 (2 required).

TE69 – Press tool for seat SD107.

Lubricate 'O' rings, inner & outer edges of diaphragm & plastic threads with chlorofluorocarbon grease.

Bench Tests :

Pressure test complete manifold assembly, before fitting to body, to 5 bar.– No leaks.

Vacuum test complete unit. Plug gas connection, evacuate unit through ejector & relief connection to 120mm Hg.–No leaks. Remove relief connection, re–evacuate to 120mm Hg. – No leaks.

Test Procedure – TP 45

Instrument supplied with vent & vacuum tubing PB118 (20m).

Items marked * are in spares kit AAS1405.

Rev.	C.N.No.	Date	Drawn	Chkd./Authd.
–				
2	1620	22.10.97	TA	S.K.
1	ORIG	24.4.96.	R.E.S.	S.K.

CAD REF:– SERVER\ENGINEERING\DRAWINGS\CURRENT\7114_21

Material: –

Finish: –

THIRD ANGLE PROJECTION
DIMENSIONS IN mm UNLESS STATED.
REFER TO 'PORTACEL' ENGINEERING STANDARDS.
DRAWN GENERALLY IN ACCORDANCE WITH B.S.308
DO NOT SCALE. IF IN DOUBT – ASK.

Portacel
Winnall Valley Road
Winchester
Hampshire
United Kingdom
SO23 0LL
A part of T M Products

Scale 1:1

Title: 'CLYDE' Cl_2–WALL MOUNT

Part No. AAS1342

Drawing No. A1 7114

Rev. 2

© Copyright T M Products

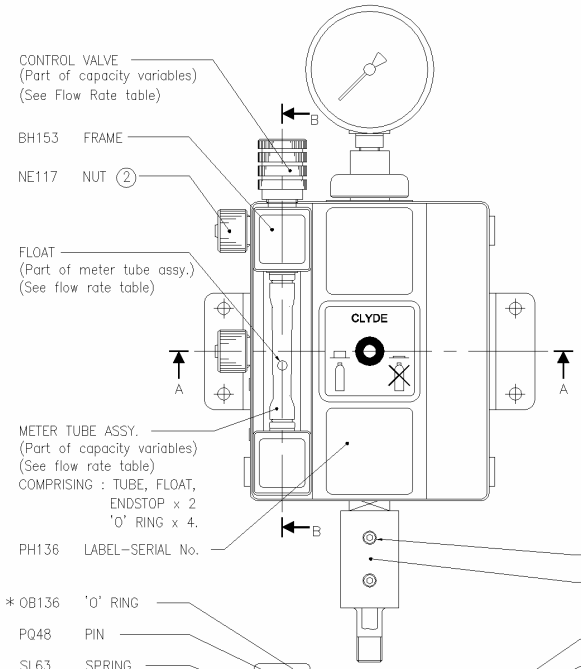

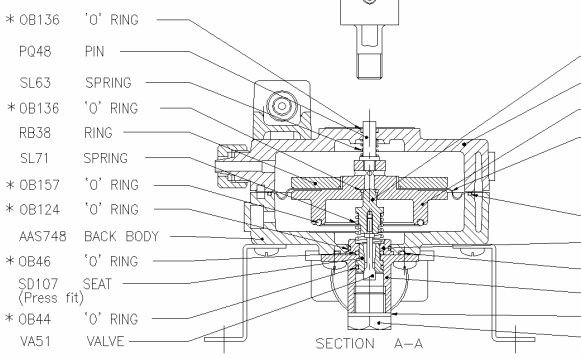

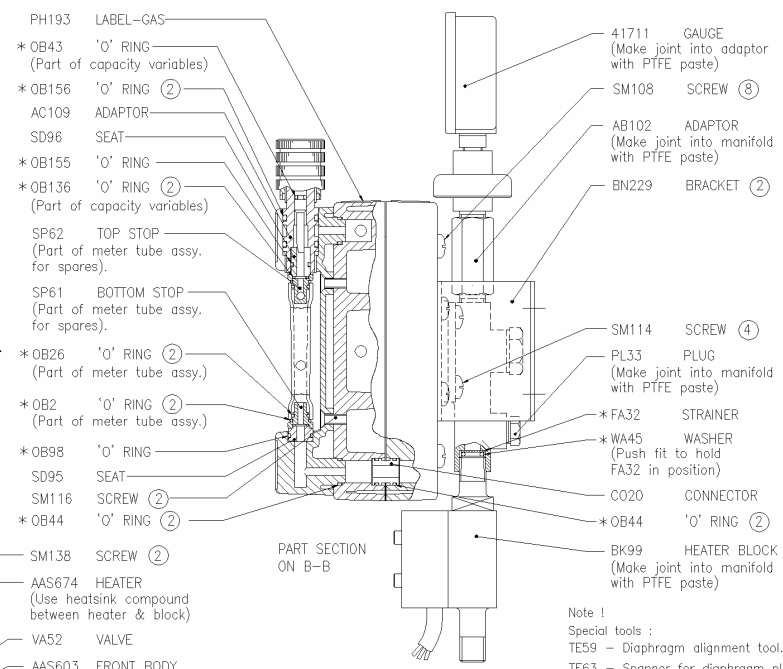

FLOW RATE g/h	CAPACITY VARIABLES PART No.
4000	AAS632
2000	AAS633
1000	AAS634
500	AAS635
250	AAS636
200	AAS637
80	AAS638
25	AAS639

METER TUBE ASSY.	CONTROL VALVE	FLOAT for spares
TK81	AAS285D	BB4
TK78	AAS285C	BA21
TK77	AAS285B	BA21
TK80	AAS285B	BA21
TK79	AAS285A	BA21
TK76	AAS285A	BA20
TK74	AAS285A	BA20
TK75	AAS285A	BA20

Note !

Special tools :

TE59 – Diaphragm alignment tool.

TE63 – Spanner for diaphragm plate & ring adaptor AC109 (2 required).

TE69 – Press tool for seat SD107.

Lubricate 'O' rings, inner & outer edges of diaphragm & plastic threads with chlorofluorocarbon grease.

Bench Tests :

Pressure test regulator–gauge union using dry air supply. Connect gas inlet to pressure source & open to 16bar. Isolate and observe no drop in pressure over 30 minute period.

Pressure test complete manifold assembly, before fitting to body, to 5 bar.– No leaks.

Vacuum test complete unit. Plug gas connection, evacuate unit through ejector & relief connection to 120mm Hg.–No leaks. Remove relief connection, re–evacuate to 120mm Hg. – No leaks.

Test Procedure – TP 45

Instrument supplied with vent & vacuum tubing PB118 (20m).

Items marked * are in spares kit AAS1405.

Rev.	C.N.No.	Date	Drawn	Chkd./Authd.
4	P2185	28.9.00.	J.C.	D.C.H.
3	P1977	22.12.99.	J.C.	A.W.C.
2	1620	22.10.97	T.A.	S.K.
1	ORIG	24.4.96.	R.E.S.	S.K.

CAD REF:– SERVER\ENGINEERING\DRAWINGS\CURRENT\7115_41

Material: –

Finish: –

THIRD ANGLE PROJECTION
DIMENSIONS IN mm UNLESS STATED.
REFER TO 'PORTACEL' ENGINEERING STANDARDS.
DRAWN GENERALLY IN ACCORDANCE WITH B.S.308
DO NOT SCALE. IF IN DOUBT – ASK.

PORTACEL DISINFECTION SYSTEMS ©

Portacel
Winnall Valley Road
Winchester
Hampshire
United Kingdom
SO23 0LL

A part of T M Products

Scale: 1:1

Title: 'CLYDE' Cl2–WALL MOUNT (WITH GAUGE)

Part No.: AAS1343

Drawing No.: A1 7115

Rev.: 4

© Copyright T M Products

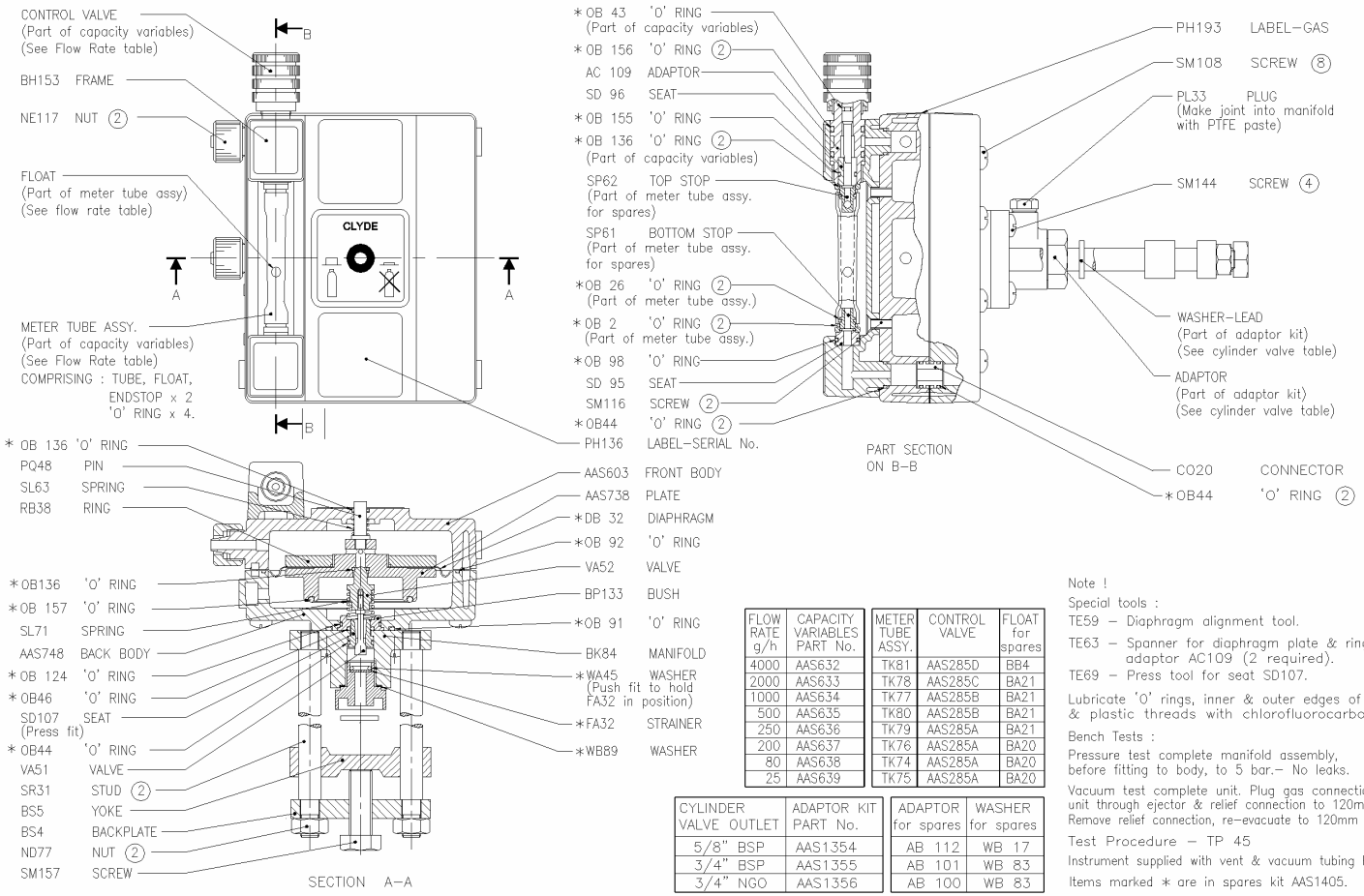

FLOW RATE g/h	CAPACITY VARIABLES PART No.
4000	AAS632
2000	AAS633
1000	AAS634
500	AAS635
250	AAS636
200	AAS637
80	AAS638
25	AAS639

METER TUBE ASSY.	CONTROL VALVE	FLOAT for spares
TK81	AAS285D	BB4
TK78	AAS285C	BA21
TK77	AAS285B	BA21
TK80	AAS285B	BA21
TK79	AAS285A	BA21
TK76	AAS285A	BA20
TK74	AAS285A	BA20
TK75	AAS285A	BA20

CYLINDER VALVE OUTLET	ADAPTOR KIT PART No.
5/8" BSP	AAS1354
3/4" BSP	AAS1355
3/4" NGO	AAS1356

ADAPTOR for spares	WASHER for spares
AB 112	WB 17
AB 101	WB 83
AB 100	WB 83

Note !

Special tools :

TE59 – Diaphragm alignment tool.

TE63 – Spanner for diaphragm plate & ring adaptor AC109 (2 required).

TE69 – Press tool for seat SD107.

Lubricate 'O' rings, inner & outer edges of diaphragm & plastic threads with chlorofluorocarbon grease.

Bench Tests :

Pressure test complete manifold assembly, before fitting to body, to 5 bar.– No leaks.

Vacuum test complete unit. Plug gas connection, evacuate unit through ejector & relief connection to 120mm Hg.–No leaks. Remove relief connection, re–evacuate to 120mm Hg. – No leaks.

Test Procedure – TP 45

Instrument supplied with vent & vacuum tubing PB118 (20m).

Items marked * are in spares kit AAS1405.

Rev.	C.N.No.	Date	Drawn	Chkd./Authd.
6	P1972	15.12.99	J.C.	A.W.C.
5	P1924	15.11.99	J.C.	A.W.C.
4	1818	9.06.99	T.A.	S.K.
3	1763	11.09.98	T.A.	S.K.
2	1620	22.10.97	T.A.	S.K.
1	ORIG	23.04.96.	R.E.S.	S.K.

CAD REF:– SERVER\ENGINEERING\DRAWINGS\CURRENT\7116_61

Material: –

Finish: –

THIRD ANGLE PROJECTION
DIMENSIONS IN mm UNLESS STATED.
REFER TO 'PORTACEL' ENGINEERING STANDARDS.
DRAWN GENERALLY IN ACCORDANCE WITH B.S.308
DO NOT SCALE. IF IN DOUBT – ASK.

PORTACEL DISINFECTION SYSTEMS ©

Portacel
Winnall Valley Road
Winchester
Hampshire
United Kingdom
SO23 0LL

A part of T M Products

Scale 1:1

Title: 'CLYDE' Cl_2–YOKE MOUNT

Part No. AAS1344

Drawing No. A1 7116

Rev. 6

© Copyright T M Products

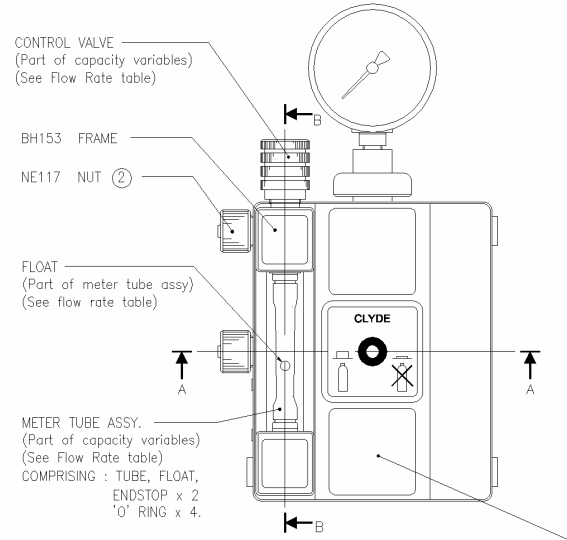

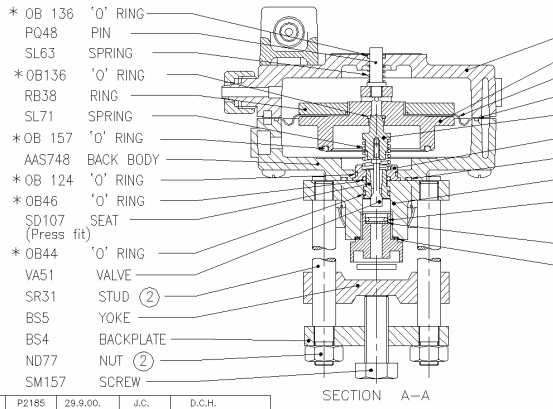

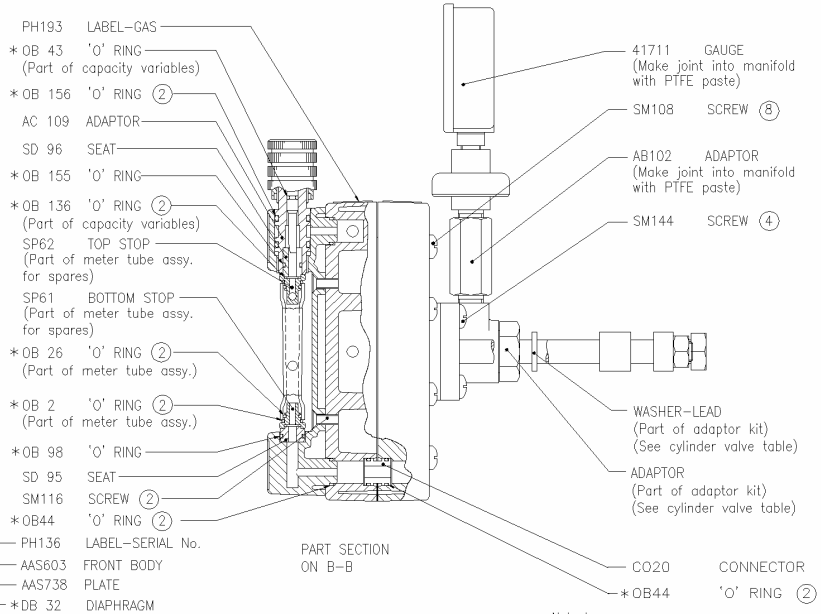

FLOW RATE g/h	CAPACITY VARIABLES PART No.
4000	AAS632
2000	AAS633
1000	AAS634
500	AAS635
250	AAS636
200	AAS637
80	AAS638
25	AAS639

METER TUBE ASSY.	CONTROL VALVE	FLOAT for spares
TK81	AAS285D	BB4
TK78	AAS285C	BA21
TK77	AAS285B	BA21
TK80	AAS285B	BA21
TK79	AAS285A	BA21
TK76	AAS285A	BA20
TK74	AAS285A	BA20
TK75	AAS285A	BA20

CYLINDER VALVE OUTLET	ADAPTOR KIT PART No.
5/8" BSP	AAS1354
3/4" BSP	AAS1355
3/4" NGO	AAS1356

ADAPTOR for spares	WASHER for spares
AB 112	WB 17
AB 101	WB 78
AB 100	WB 83

Note !

Special tools :

TE59 – Diaphragm alignment tool.

TE63 – Spanner for diaphragm plate & ring adaptor AC109 (2 required).

TE69 – Press tool for seat SD107.

Lubricate 'O' rings, inner & outer edges of diaphragm & plastic threads with chlorofluorocarbon grease.

Bench Tests :

Pressure test regulator–gauge union using dry air supply. Connect gas inlet to pressure source & open to 16bar. Isolate and observe no drop in pressure over 30 minute period.

Pressure test complete manifold assembly, before fitting to body, to 5 bar.– No leaks.

Vacuum test complete unit. Plug gas connection, evacuate unit through ejector & relief connection to 120mm Hg.–No leaks. Remove relief connection, re–evacuate to 120mm Hg. – No leaks.

Test Procedure – TP 45

Instrument supplied with vent & vacuum tubing PB118 (20m).

Items marked * are in spares kit AAS1405..

Rev.	C.N.No.	Date	Drawn	Chkd./Authd.
7	P2185	29.9.00.	J.C.	D.C.H.
6	P1977	22.12.99.	J.C.	A.W.C.
5	P1972	15.12.99.	J.C.	A.W.C.
4	1818	9.06.99	T.A.	S.K.
3	1620	11.09.98	T.A.	S.K.
2	1620	22.10.97	T.A.	S.K.
1	ORIG	23.4.96.	R.E.S.	S.K.

CAD REF:– SERVER\ENGINEERING\DRAWINGS\CURRENT\7117_71

Material: –

Finish: –

THIRD ANGLE PROJECTION
DIMENSIONS IN mm UNLESS STATED.
REFER TO 'PORTACEL' ENGINEERING STANDARDS.
DRAWN GENERALLY IN ACCORDANCE WITH B.S.308
DO NOT SCALE. IF IN DOUBT – ASK.

PORTACEL DISINFECTION SYSTEMS ©

Portacel
Winnall Valley Road
Winchester
Hampshire
United Kingdom
SO23 0LL

A part of T M Products

Scale: 1:1

Title: 'CLYDE' Cl_2–YOKE MOUNT (WITH GAUGE)

Part No.: AAS1345

Drawing No.: A1 7117

Rev.: 7

© Copyright T M Products

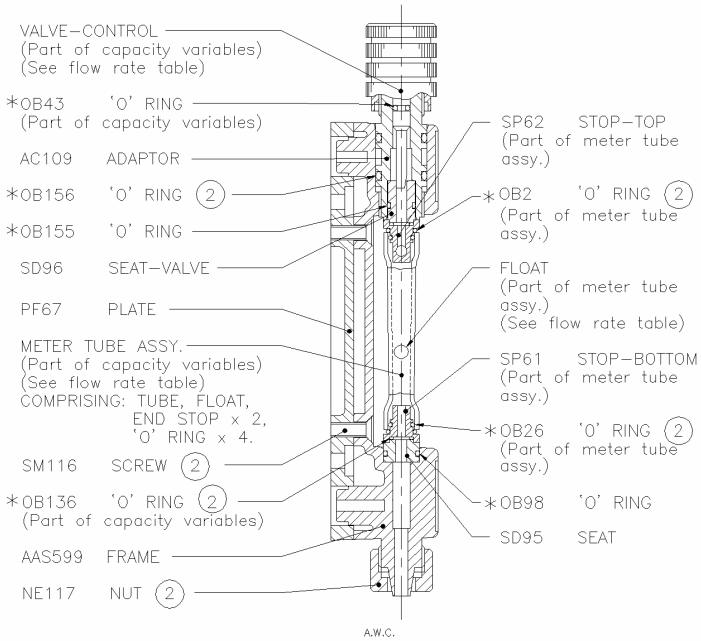

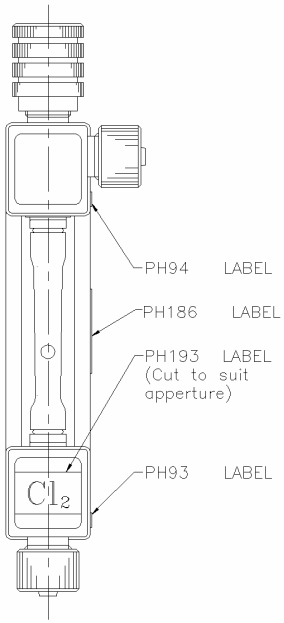

FLOW RATE g/h	CAPACITY VARIABLES PART No.
4000	AAS632
2000	AAS633
1200	41833
1000	AAS634
500	AAS635
250	AAS636
200	AAS637
80	AAS638
25	AAS639

METER TUBE ASSY.	CONTROL VALVE	FLOAT (SPARES ONLY)
TK81	AAS285D	BB4
TK78	AAS285C	BA21
TK152	AAS285B	BA21
TK77	AAS285B	BA21
TK80	AAS285B	BA21
TK79	AAS285A	BA21
TK76	AAS285A	BA20
TK74	AAS285A	BA20
TK75	AAS285A	BA20

Note !

Special tools :

TE62 – Adaptor AC109

Lubricate 'O' rings & plastic threads with chlorofluorocarbon grease.

Bench Test :

Vacuum test by plugging either connection & evacuate through other to 180mm Hg. No leaks.

Test Procedure : TP45.

Instrument supplied with vacuum tubing PB118 (15m).

Items marked * are in spares kit AAS1447.

Rev.	C.N.No.	Date	Drawn	Chkd./Authd.
6	P2174	21.8.00	D.C.H.	N.S.
5	P1874	13.10.99.	J.C.	A.W.C.
4	1457	22.3.96.	R.E.S.	S.K.
3		AUG. 86	D.R.	
2		JUNE 86	S.K.	
1	ORIG.	SEPT.84	S.K.	

CAD REF:– C:\DRAWINGS\CURRENT\5638_61

Material

Finish

THIRD ANGLE PROJECTION
DIMENSIONS IN mm UNLESS STATED.
REFER TO 'PORTACEL' ENGINEERING STANDARDS.
DRAWN GENERALLY IN ACCORDANCE WITH B.S.308
DO NOT SCALE. IF IN DOUBT – ASK.

PORTACEL DISINFECTION SYSTEMS

Portacel
Winnall Valley Road
Winchester
Hampshire
United Kingdom
SO23 0LL
© A part of T M Products.

Scale 1:1

Title CLYDE Cl_2 REMOTE METER TUBE FRAME

Part No. AAS608

Drawing No. A2 5638

Rev. 6

© Copyright T M Products Ltd.

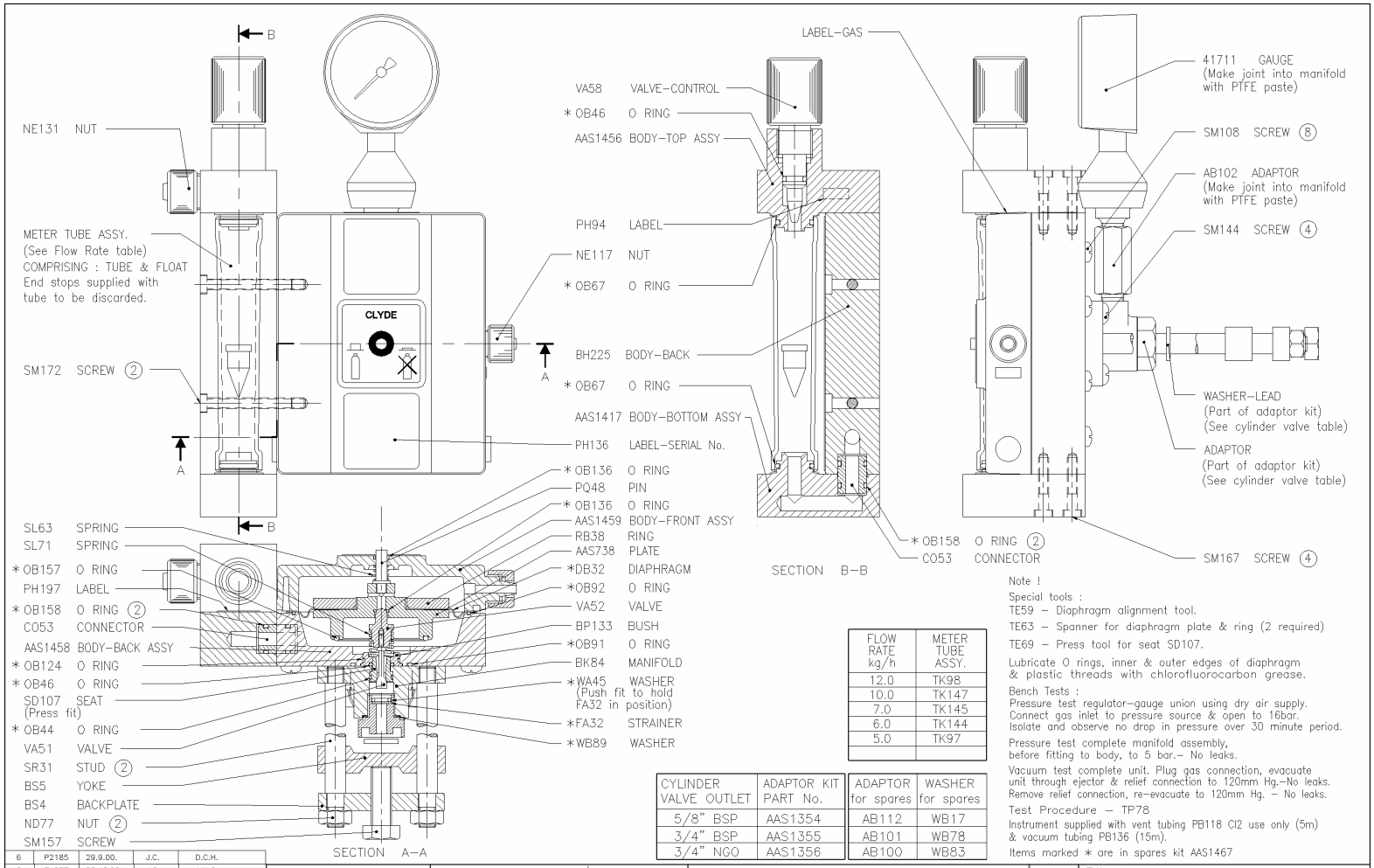

FLOW RATE kg/h	METER TUBE ASSY.
12.0	TK98
10.0	TK147
7.0	TK145
6.0	TK144
5.0	TK97

CYLINDER VALVE OUTLET	ADAPTOR KIT PART No.
5/8" BSP	AAS1354
3/4" BSP	AAS1355
3/4" NGO	AAS1356

ADAPTOR for spares	WASHER for spares
AB112	WB17
AB101	WB78
AB100	WB83

Note !

Special tools :
TE59 – Diaphragm alignment tool.
TE63 – Spanner for diaphragm plate & ring (2 required)
TE69 – Press tool for seat SD107.

Lubricate O rings, inner & outer edges of diaphragm & plastic threads with chlorofluorocarbon grease.

Bench Tests :
Pressure test regulator–gauge union using dry air supply.
Connect gas inlet to pressure source & open to 16bar.
Isolate and observe no drop in pressure over 30 minute period.

Pressure test complete manifold assembly, before fitting to body, to 5 bar.– No leaks.

Vacuum test complete unit. Plug gas connection, evacuate unit through ejector & relief connection to 120mm Hg.–No leaks. Remove relief connection, re–evacuate to 120mm Hg. – No leaks.

Test Procedure – TP78

Instrument supplied with vent tubing PB118 Cl2 use only (5m) & vacuum tubing PB136 (15m).

Items marked * are in spares kit AAS1467

Rev.	C.N.No.	Date	Drawn	Chkd./Authd.
6	P2185	29.9.00.	J.C.	D.C.H.
5	P1977	22.12.99.	J.C.	A.W.C.
4	P1972	15.12.99.	J.C.	A.W.C.
3	P1964	3.12.99	D.C.H.	A.W.C.
2	1545	9.10.96	R.E.S.	S.K.
1	ORIG	28.6.96.	R.E.S.	S.K.

CAD REF:– SERVER\ENGINEERING\DRAWINGS\CURRENT\7284_61

Material

Finish

THIRD ANGLE PROJECTION
DIMENSIONS IN mm UNLESS STATED.
REFER TO 'PORTACEL' ENGINEERING STANDARDS.
DRAWN GENERALLY IN ACCORDANCE WITH B.S.308
DO NOT SCALE. IF IN DOUBT – ASK.

PORTACEL DISINFECTION SYSTEMS ©

Portacel
Winnall Valley Road
Winchester
Hampshire
United Kingdom
SO23 OLL
A part of T M Products

Scale 1:1

Title CLYDE L.C.–YOKE MOUNT CL_2 (WITH GAUGE)

Part No. AAS1461

Drawing No. A1 7284

Rev. 6

© Copyright T M Products

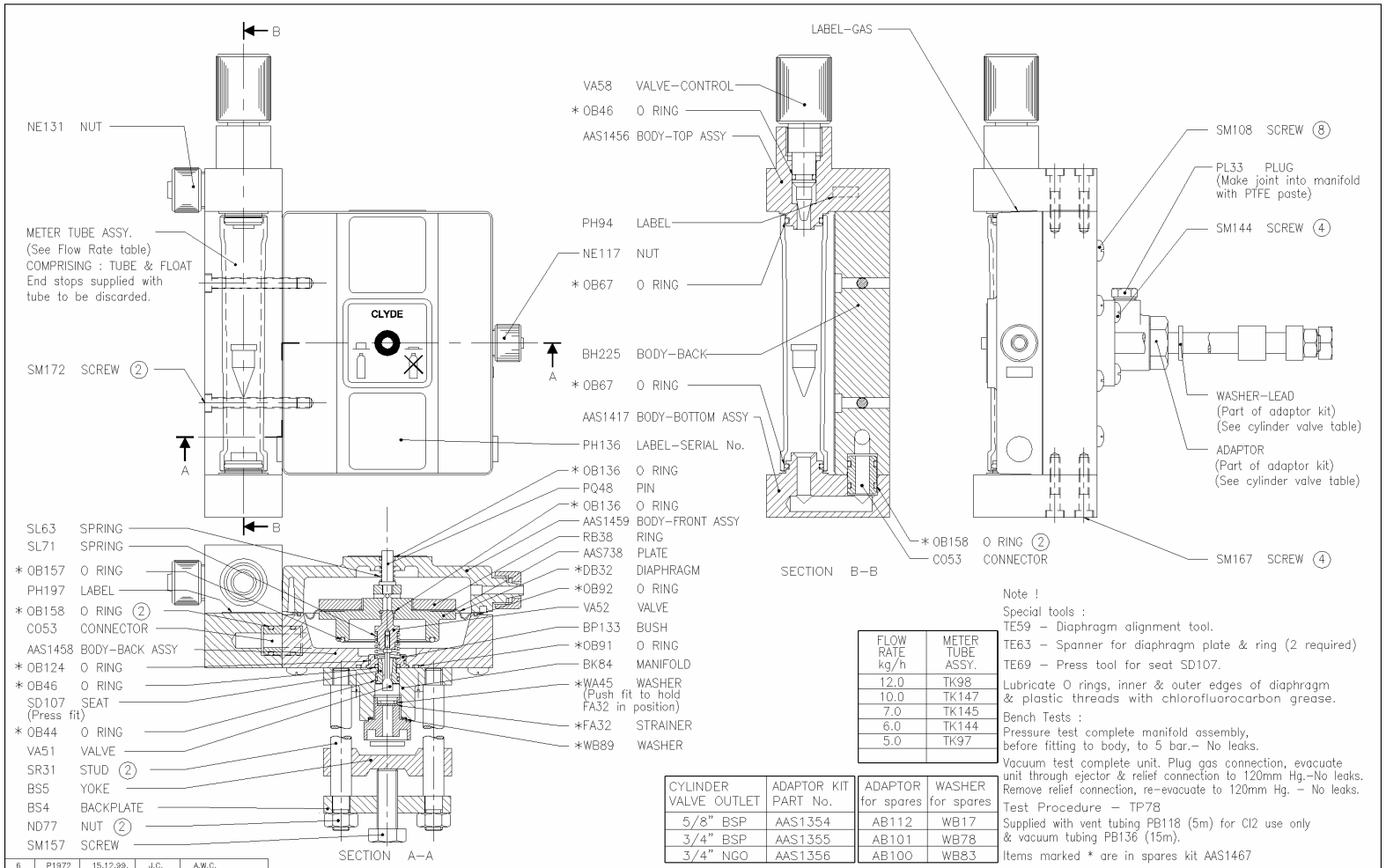

FLOW RATE kg/h	METER TUBE ASSY.
12.0	TK98
10.0	TK147
7.0	TK145
6.0	TK144
5.0	TK97

CYLINDER VALVE OUTLET	ADAPTOR KIT PART No.	ADAPTOR for spares	WASHER for spares
5/8" BSP	AAS1354	AB112	WB17
3/4" BSP	AAS1355	AB101	WB78
3/4" NGO	AAS1356	AB100	WB83

Note !

Special tools :

TE59 – Diaphragm alignment tool.

TE63 – Spanner for diaphragm plate & ring (2 required)

TE69 – Press tool for seat SD107.

Lubricate O rings, inner & outer edges of diaphragm & plastic threads with chlorofluorocarbon grease.

Bench Tests :

Pressure test complete manifold assembly, before fitting to body, to 5 bar.– No leaks.

Vacuum test complete unit. Plug gas connection, evacuate unit through ejector & relief connection to 120mm Hg.–No leaks. Remove relief connection, re-evacuate to 120mm Hg. – No leaks.

Test Procedure – TP78

Supplied with vent tubing PB118 (5m) for Cl2 use only & vacuum tubing PB136 (15m).

Items marked * are in spares kit AAS1467

Rev.	C.N.No.	Date	Drawn	Chkd./Authd.
6	P1972	15.12.99.	J.C.	A.W.C.
5	P1864	5.10.99	D.C.H.	A.W.C.
4	1818	9.06.99	T.A.	S.K.
3	1620	22.10.96	T.A.	S.K.
2	1545	9.10.96	R.E.S.	S.K.
1	ORIG	5.8.96.	R.E.S.	S.K.

CAD REF:– SERVER\ENGINEERING\DRAWINGS\CURRENT\7291_51

Material

Finish

THIRD ANGLE PROJECTION

DIMENSIONS IN mm UNLESS STATED.

REFER TO 'PORTACEL' ENGINEERING STANDARDS.

DRAWN GENERALLY IN ACCORDANCE WITH B.S.308

DO NOT SCALE. IF IN DOUBT – ASK.

PORTACEL DISINFECTION SYSTEMS ©

Portacel
Winnall Valley Road
Winchester
Hampshire
United Kingdom
SO23 0LL

A part of T M Products

Scale 1:1

Title CLYDE L.C.–YOKE MOUNT CL_2

Part No. AAS1465

Drawing No. A1 7291

Rev. 6

© Copyright T M Products

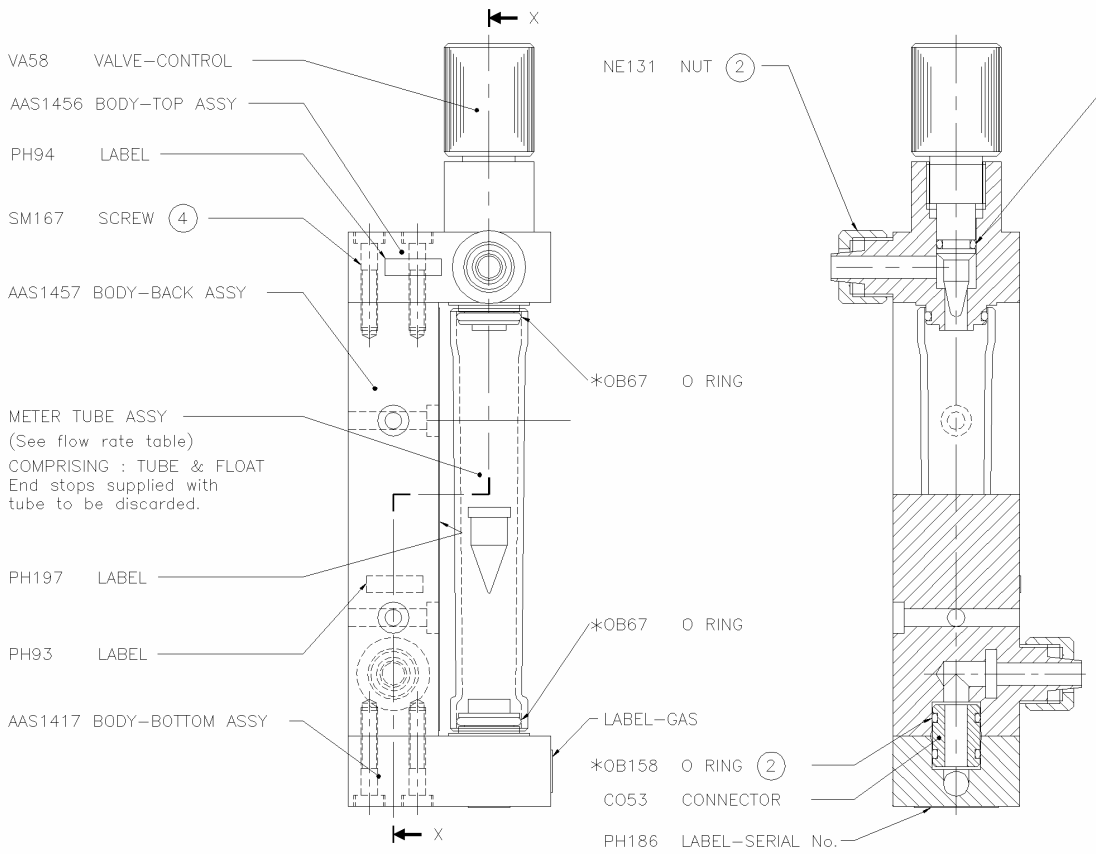

FLOW RATE kg/h	METER TUBE ASSY.
12.0	TK98
10.0	TK147
7.0	TK145
6.0	TK144
5.0	TK97

Note !

Lubricate O rings and plastic threads with chlorofluorocarbon grease.

Bench Tests :

Vacuum test by plugging either connection & evacuate through other to 180mm Hg No leaks.

Test Procedure – TP78

Instrument supplied with vacuum tubing

Items marked * are in spares kit AAS1468

Rev.	C.N.No.	Date	Drawn	Chkd./Authd.
2	P2236	05.01.01	D.C.H.	P.N.
1	ORIG	26.6.96.	R.E.S	S.K

CAD REF:– SERVER\ENGINEERING\DRAWINGS\CURRENT\7283_21

Material: AS STATED

Finish

THIRD ANGLE PROJECTION
DIMENSIONS IN mm UNLESS STATED.
REFER TO 'PORTACEL' ENGINEERING STANDARDS.
DRAWN GENERALLY IN ACCORDANCE WITH B.S.308
DO NOT SCALE. IF IN DOUBT – ASK.

PORTACEL DISINFECTION SYSTEMS

Portacel
Winnall Valley Road
Winchester
Hampshire
United Kingdom
SO23 0LL
© A part of T M Products

Scale: 1:1

Title: CLYDE REMOTE METER FRAME BASIC BUILD CL2/SO2 5–12KG/H

Part No.: AAS1460

Drawing No.: A2 7283

Rev.: 2

© Copyright T M Products

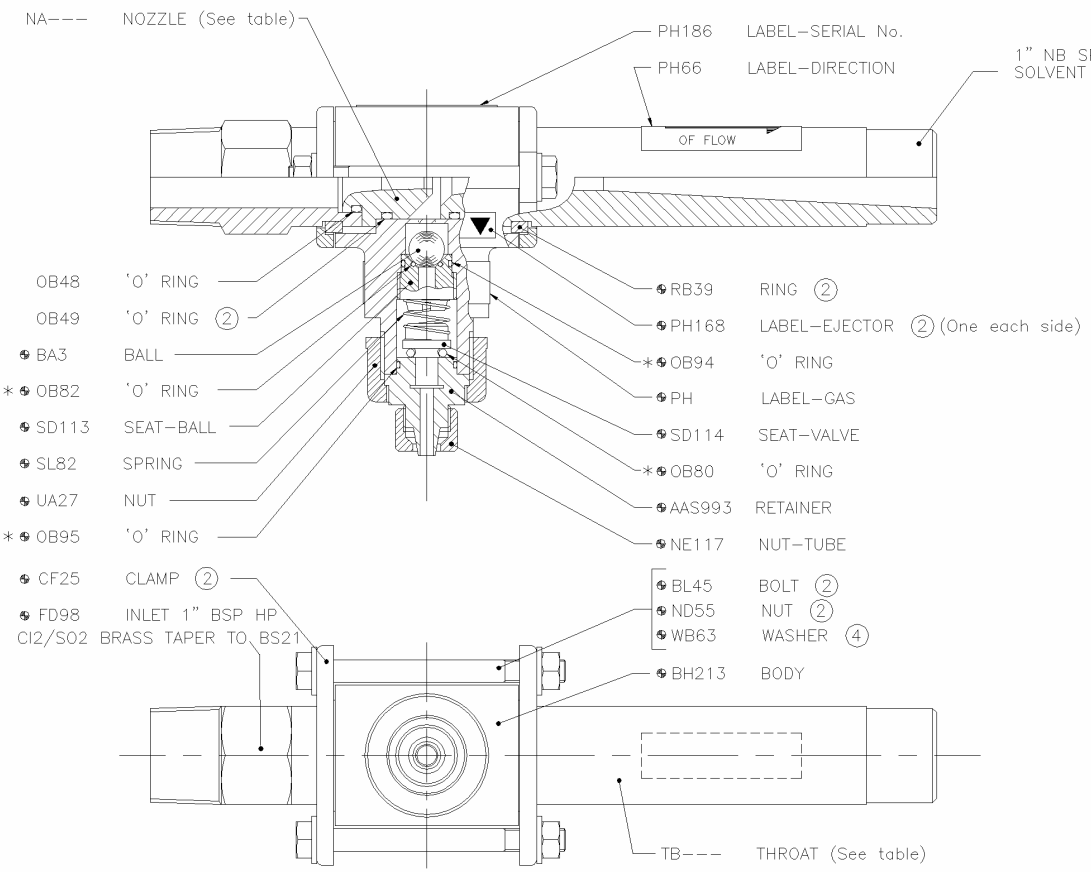

CAPACITY Cl_2/SO_2	PART No.	NOZZLE	THROAT
0–500gm	AAS1050	NA57	TB115
1–2kg	AAS1052	NA63	TB117
4kg	AAS1053	NA65	TB120
5kg	AAS1054	NA66	TB123

Note:

Lubricate 'O' rings (except OB80 & OB82) & plastic threads with chlorofluorocarbon grease.

Special tools:
TE63 for seat SD113.

This drawing to be read in conjunction with test procedure TP31.

Items marked ♣ form assembly AAS992 (For Portacel use only).

Items marked * are in spares kit AAS1368

For CL_2 use gas label PH175
For SO_2 use gas label PH176

Rev.	C.N.No.	Date	Drawn	Chkd./Authd.
6	P2022	2.2.00.	J.C.	A.W.C.
5	P1877	14.10.99	D.C.H.	A.W.C.
4	P1871	11.10.99	J.C.	A.W.C.
3	CN1319	OCT.94	C.R.	S.K.
2	CN951	JUL.92	R.E.S.	S.K.
1	ORIG	29.5.92	R.E.S.	S.K.

CAD REF:– SERVER\ENGINEERING\DRAWINGS\CURRENT\6689_61

Material

Finish

THIRD ANGLE PROJECTION
DIMENSIONS IN mm UNLESS STATED.
REFER TO 'PORTACEL' ENGINEERING STANDARDS.
DRAWN GENERALLY IN ACCORDANCE WITH B.S.308
DO NOT SCALE. IF IN DOUBT – ASK.

PORTACEL DISINFECTION SYSTEMS

Portacel
Winnall Valley Road
Winchester
Hampshire
United Kingdom
SO23 0LL
© A part of T M Products

Scale 1:1

Title EJECTOR 1" HP Cl2/SO2 DEMOUNT

Part No. SEE TABLE

Drawing No. A2 6689

Rev. 6

© Copyright T M Products

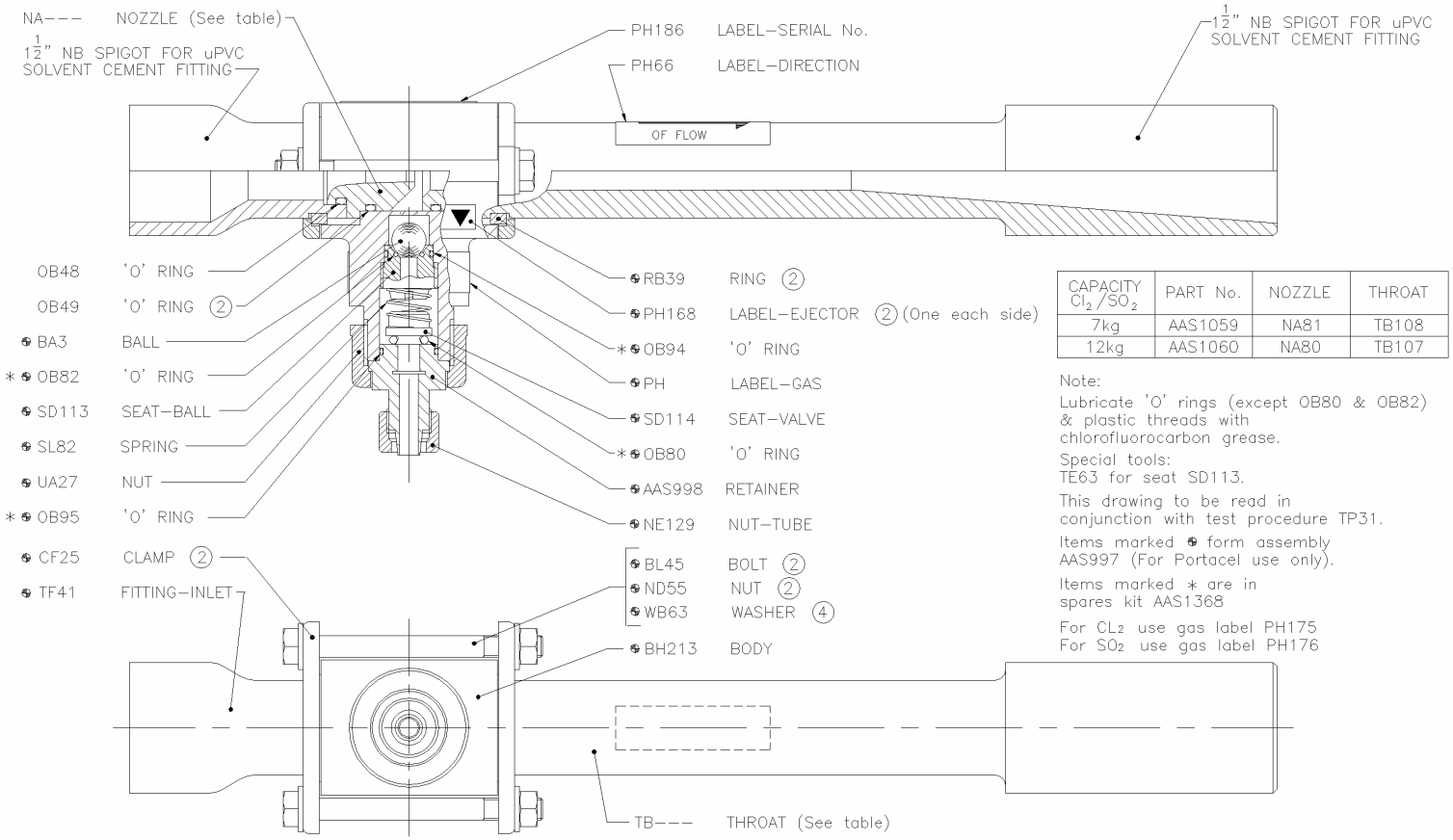

CAPACITY Cl_2/SO_2	PART No.	NOZZLE	THROAT
7kg	AAS1059	NA81	TB108
12kg	AAS1060	NA80	TB107

Note:
Lubricate 'O' rings (except OB80 & OB82) & plastic threads with chlorofluorocarbon grease.
Special tools:
TE63 for seat SD113.
This drawing to be read in conjunction with test procedure TP31.
Items marked ⊕ form assembly AAS997 (For Portacel use only).
Items marked * are in spares kit AAS1368
For CL_2 use gas label PH175
For SO_2 use gas label PH176

Rev.	C.N.No.	Date	Drawn	Chkd./Authd.
3	P1871	11.10.99	J.C.	A.W.C.
2	1320	OCT 94	R.E.S.	S.K.
1	ORIG	3.7.92.	R.E.S.	S.K.

CAD REF:– SERVER\ENGINEERING\DRAWINGS\CURRENT\6705_31

Material
Finish

THIRD ANGLE PROJECTION
DIMENSIONS IN mm UNLESS STATED.
REFER TO 'PORTACEL' ENGINEERING STANDARDS.
DRAWN GENERALLY IN ACCORDANCE WITH B.S.308
DO NOT SCALE. IF IN DOUBT – ASK.

PORTACEL DISINFECTION SYSTEMS
Portacel
Winnall Valley Road
Winchester
Hampshire
United Kingdom
SO23 0LL
A part of T M Products

Scale 1:1
Title EJECTOR–1½"–CL_2/SO_2
Part No. SEE TABLE
Drawing No. A2 6705
Rev. 3
© Copyright T M Products

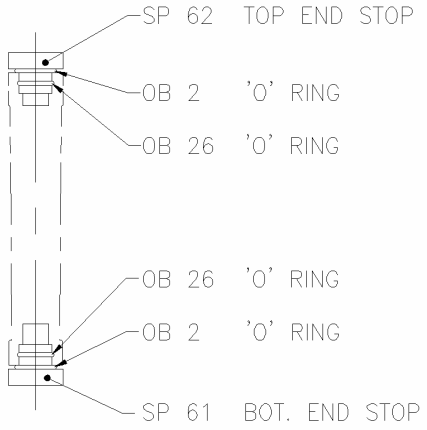

METER TUBE–MPB (GREY) END STOPS
ALL CAPACITIES UP TO 4 kg

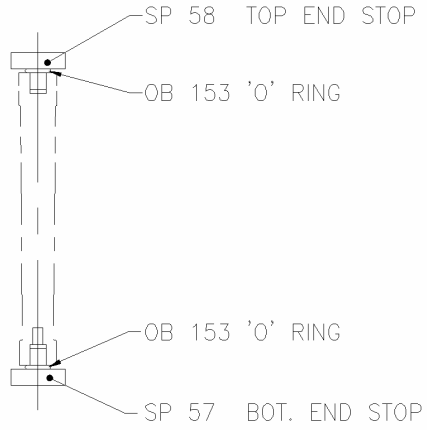

UP TO 250 g.

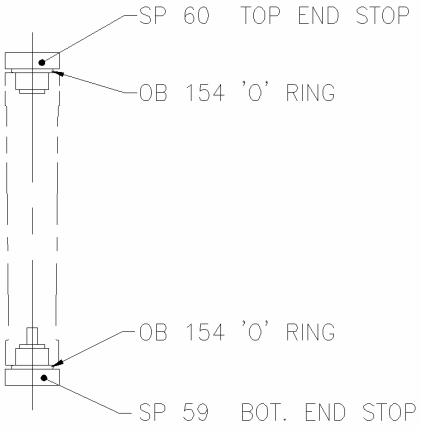

4 kg

METER TUBE–ROTA (WHITE) END STOPS
CAPACITIES AS SHOWN

USED ON FOLLOWING INSTRUMENTS : CLORETTA ; CLYDE ; SERIES 42 ; SUPERCLYDE.

Rev.	C.N.No.	Date	Drawn	Chkd./Authd.
–	–	–	–	–
–	–	–	–	–
–	–	–	–	–
2	1697	25.5.98.	T.A.	S.K.
1	ORIG	5.5.94.	R.E.S.	S.K.

CAD REF:– SERVER\ENG\DRAWING\CURRENT\7004_21

Material: AS STATED

Finish: SELF

THIRD ANGLE PROJECTION
DIMENSIONS IN mm UNLESS STATED.
REFER TO 'PORTACEL' ENGINEERING STANDARDS.
DRAWN GENERALLY IN ACCORDANCE WITH B.S.308
DO NOT SCALE. IF IN DOUBT – ASK.

PORTACEL DISINFECTION SYSTEMS
Portacel
Winnall Valley Road
Winchester
Hampshire
United Kingdom
SO23 0LL
A part of T M Products

Scale: 1:1

Title: 70mm METER TUBE ENDS

Part No.: –

Drawing No.: A3 7004

Rev.: 2

© Copyright T M Products

EJECTOR

Vacuum Drawing System

The Portacel Ejector is used to create the vacuum conditions under which the range of Portacel chemical dosing units operate. The safe simple operation of the Ejector eliminates the need for dosing pumps and allows a range of dosing chemicals and capacities to be catered for. Installed directly into a dedicated motive water line with the

option of a booster pump, the Ejector draws a chemical into the water. In conjunction with Portacel dosing and analysing equipment it forms part of a complete dosing system.

- Wide operating capacity - 0.25 kg - 200 kg per hour
- Suitable for a range of chemicals - Cl_2, SO_2, NH_3, CO_2, NaOCl
- Safe operation - Chemicals dosed under vacuum
- Double non-return valve for added security
- Minimal maintenance - low part count
- Eliminates the need for dosing pumps
- Corrosion resistant materials ensure durability and reliability
- Operates with the complete range of Portacel gas and liquid dosing units

PORTACEL

EJECTOR

HOW IT WORKS

Water is supplied to the Portacel Ejector at site pressure or via a booster pump. The water is passed through an internal orifice and into the nozzle of the ejector. A pressure differential is established across the nozzle to generate a vacuum and draw in the chemical from the dosing unit. The chemical is mixed with the operating water in the mixing tube of the Ejector body to form a concentrated solution. The solution is then injected at the point of application of the system.

If the water flow is stopped, two positive non-return valves (a ball valve and a spring loaded valve) prevent water from flowing back into the vacuum system.

1. Operating water pressure at ejector (bar) = 3 + Boost pressure
2. Back pressure at ejector (bar) = 3
3. Dynamic mains pressure (bar)
4. Water flow, Q (m^3/h)

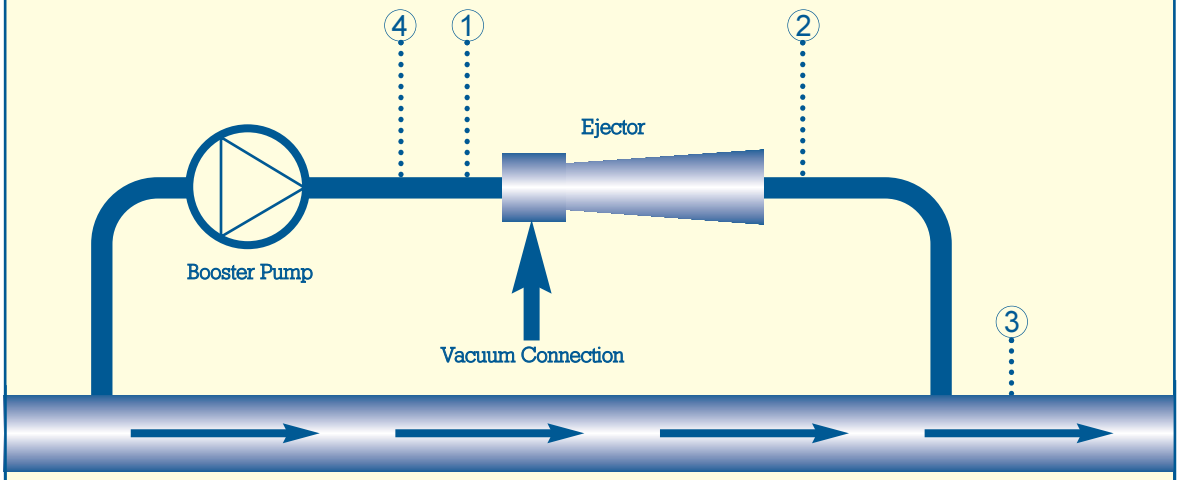

Fig 1

Fig 2 Typical Ejector Performance Graph

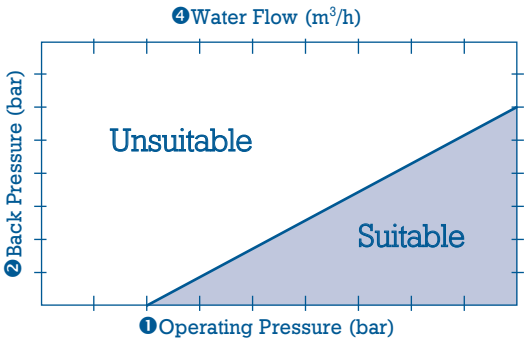

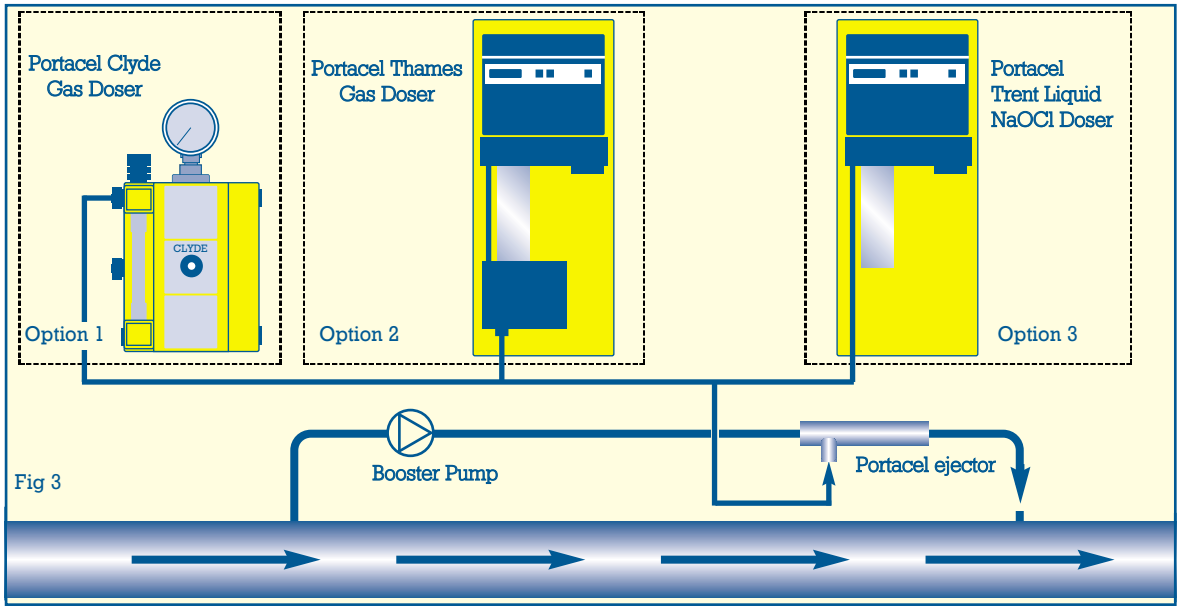

Fig 3

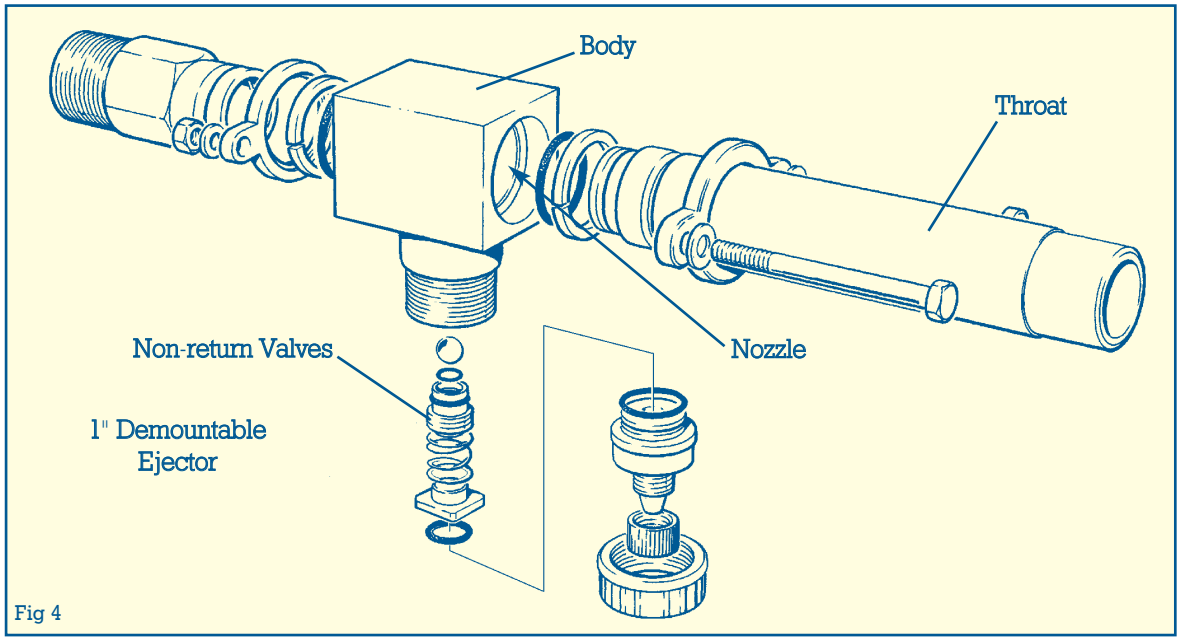

Fig 4

Further Information

For the complete solution to your disinfection requirements, Portacel offer a comprehensive range of products, among these products are:

Gas Dosing - Liquid Dosing - Analysers
Safety Monitors - Electro-chlorination
Cylinder Changeover

For full information concerning the Portacel range of products please contact the the address and telephone number shown on the back of this brochure.

Product Weights & Dimensions

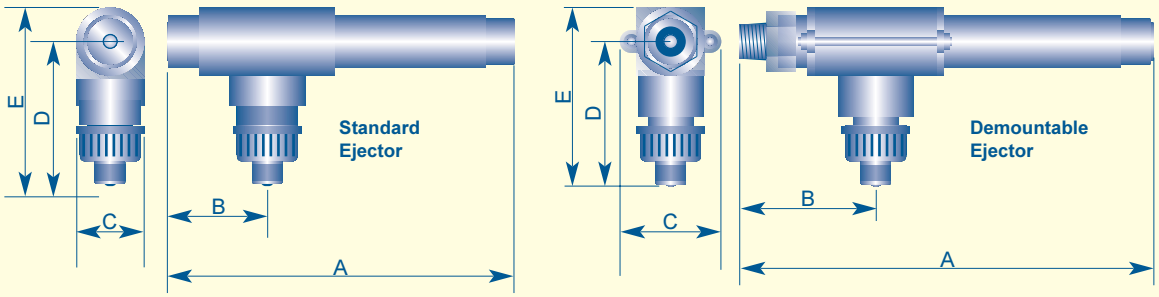

Ejector Size	Dimensions (all in mm) A	B	C	D	E
1" Standard	248	69	43	104.5	126
1.5" Standard	337	76	48	110	134

All Dimensions in millimetres
Do not scale

Ejector Size	Dimensions (all in mm) A	B	C	D	E
1" Demountable	310	97	78	100	125
1.5" Demountable	423	103	78	105	130
2" Demountable	635	106	140	195	236
3" Demountable	704	181	200	202	302

Fig 5

Technical Data

Sizes		1" Standard	1" Demountable	1.5" Standard	1.5" Demountable	2" Demountable	3" Demountable
Capacity	Cl_2	5 kg	5 kg	12 kg	12 kg	40 kg	80 kg
	SO_2	5 kg	5 kg	12 kg	12 kg	40 kg	80 kg
	NH_3	2.5 kg	2.5 kg	6 kg	6 kg	20 kg	40 kg
Connections	Inlet	1" uPVC Spigot	1" BSP Taper BS21	1.5" uPVC Spigot	1.5" uPVC Spigot	2" uPVC Spigot	3" Stub Flanges
	Outlet	1" uPVC Spigot	1" uPVC Spigot	1.5" uPVC Spigot	1.5" uPVC Spigot	2" uPVC Spigot	3" Stub Flanges
Max operating pressure		15 bar	25 bar	15 bar	15 bar	12 bar	15 bar
Max solution pressure		9 bar	15 bar	9 bar	9 bar	9 bar	9 bar
Operating temperature		20°C	20°C	20°C	20°C	20°C	20°C
Vacuum connection		6mm I/D hose or 3/8" BSP Par BS2779		8mm I/D hose or 3/8" BSP Par BS2779		3/4" BSP Par BS2779	1" BSP Par BS2779
Weight		0.45 kg	1.0 kg	0.65 kg	0.9 kg	2.95 kg	6.9kg

4" Ejector also available - Details available on application.

Technical Specification

The Ejector shall be a *1" - 1½" - 2" - 3" - 4" ** model manufactured by Portacel and shall be a *standard - demountable** type. The Ejector shall be operated by a specific water pressure and flow rate and generate a vacuum to ensure full capacity operation of the associated dosing unit at..... kg/hr. Connection shall be via a purpose made injection fitting.* The Ejector will incorporate double, positive non-return valves preventing back flow of any water into the vacuum system.

**Delete as appropriate*

Portacel
Winnall Valley Road
Winchester, Hampshire
SO23 0LL U. K.
Tel: +44(0)1962 705200
Fax: +44(0)1962 705279
A part of T M Products Limited.

PORTACEL
DISINFECTION SYSTEMS

We reserve the right to change the design and specification without notice © T M Products Limited. Port DS. 003. 5k. 10.97

EJECTORS

The ejector is used to generate the vacuum conditions under which the range of chemical dosing units operate.

How It Works

Water is supplied to the Portacel ejector at site pressure or via a booster pump. The water is passed through an internal orifice and into the nozzle of the ejector. A pressure differential is established across the nozzle to generate a vacuum and draw in the chemical from the dosing unit. The chemical is mixed with the operating water in the mixing tube of the ejector body to form a concentrated solution. The solution is then injected at the point of application of the system.

If the water flow is stopped, two positive non – return valves (a ball valve and a spring loaded valve) prevent water from flowing back into the vacuum system.

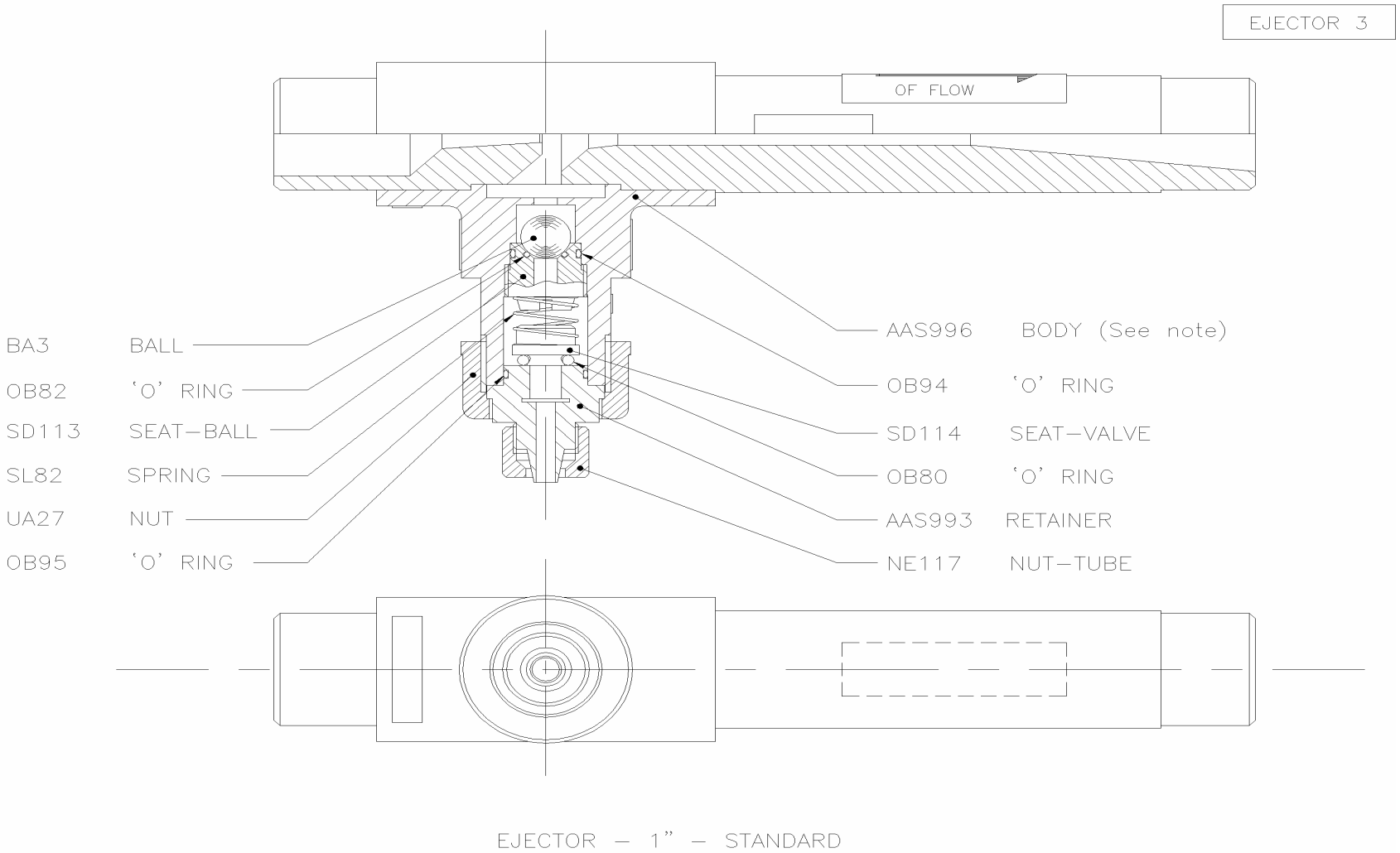

EJECTOR – 1" – STANDARD

1" & 1.5" EJECTOR

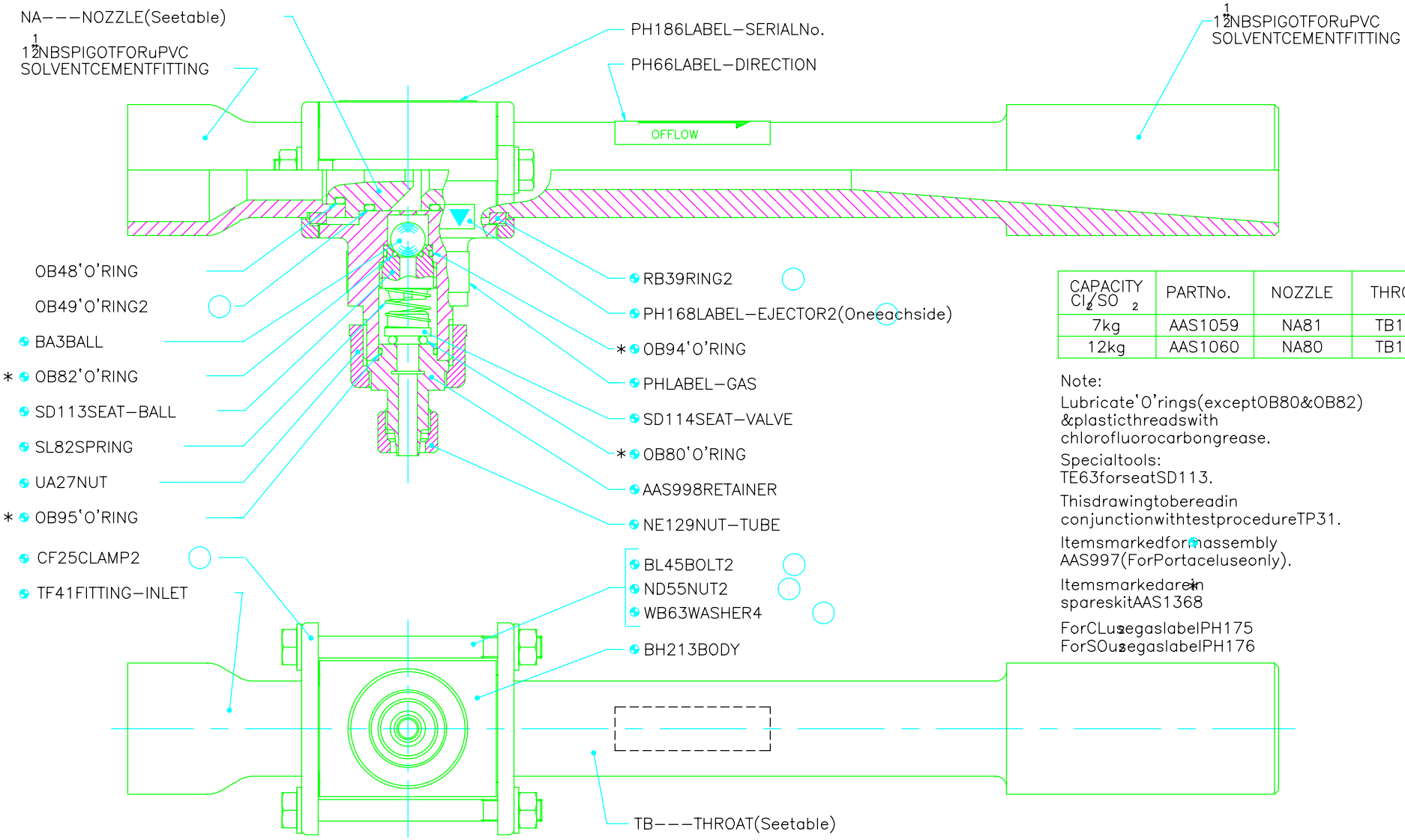

CAPACITY Cl_2/SO_2	PARTNo.	NOZZLE	THROAT
7kg	AAS1059	NA81	TB108
12kg	AAS1060	NA80	TB107

Note:

Lubricate'O'rings(exceptOB80&OB82) &plasticthreadswith chlorofluorocarbongrease.

Specialtools: TE63forseatSD113.

Thisdrawingtobereadin conjunctionwithtestprocedureTP31.

Itemsmarkedforassembly AAS997(ForPortaceluseonly).

Itemsmarkedare* in spareskitAAS1368

ForCLusegaslabelPH175
ForSOusegaslabelPH176

Rev.	C.N.No.	Date	Drawn	Chkd./Authd.
3	P1871	11.10.99	J.C.	A.W.C.
2	1320	OCT94	R.E.S.	S.K.
1	ORIG	3.7.92.	R.E.S.	S.K.

CADREF:-SERVER\ENGINEERING\DRAWINGS\ CURRENT\6705_31

Material

Finish

THIRDANGLEPROJECTION

DIMENSIONSINmmUNLESSSTATED.

REFERTO'PORTACEL'ENGINEERINGSTANDARDS.

DRAWNGENERALLYINACCORDANCEWITHB.S.308

DONOTSCALE. IFINDOUBT-ASK.

PORTACEL DISINFECTIONSYSTEMS

Portacel
WinnallValleyRoad
Winchester
Hampshire
UnitedKingdom
SO230LL

ApartofTMProducts

Scale 1:1

Title EJECTOR-1½-CL/SO2

PartNo. SEETABLE

DrawingNo. A2 6705

Rev. 3

© Copyright TMProducts

EJECTOR – 1”
METHOD OF SERVICE STATEMENT

To service a 1” ejector the following service kit will be required:

Part Number: AAS1368 – Spares kit 1” & 1.5” Ejector

Part Number	Description	Quantity
OB80	O-Ring	1
OB82	O-Ring	1
OB94	O-Ring	1
OB95	O-Ring	1

1. Isolate both ends of the ejector before starting and remove from the stream if required
2. Unscrew NE117 tube retaining nut and remove together with the vacuum hose.

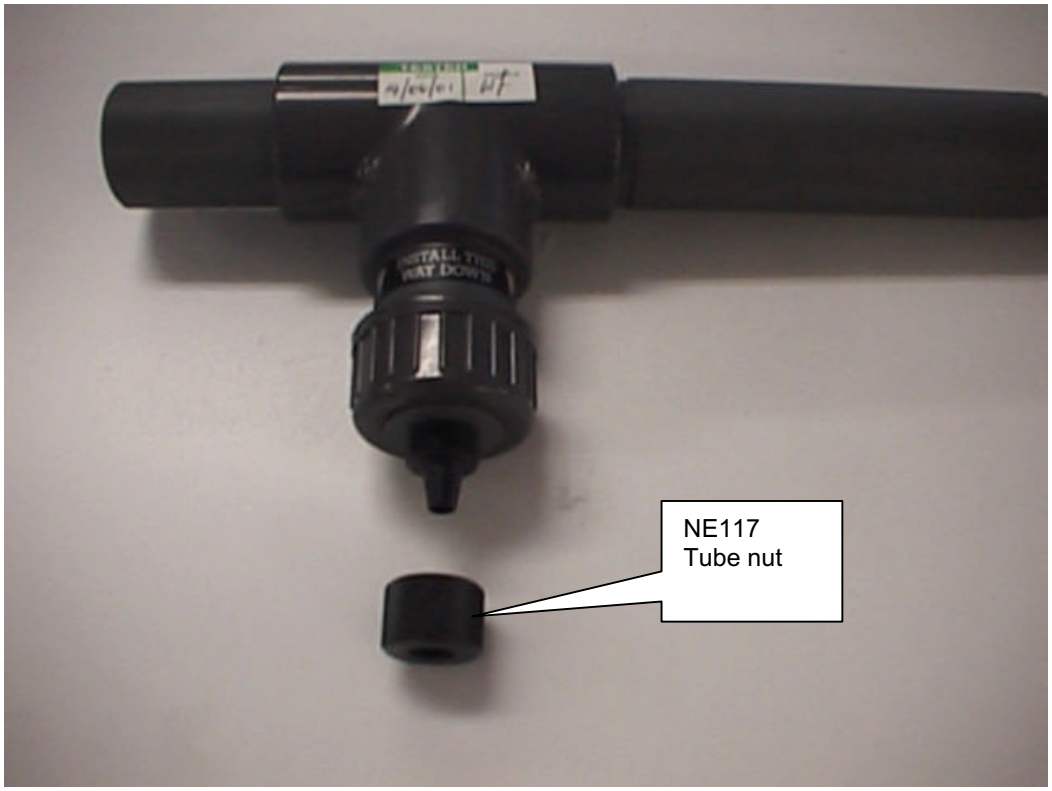

3. Unscrew UA27 nut.

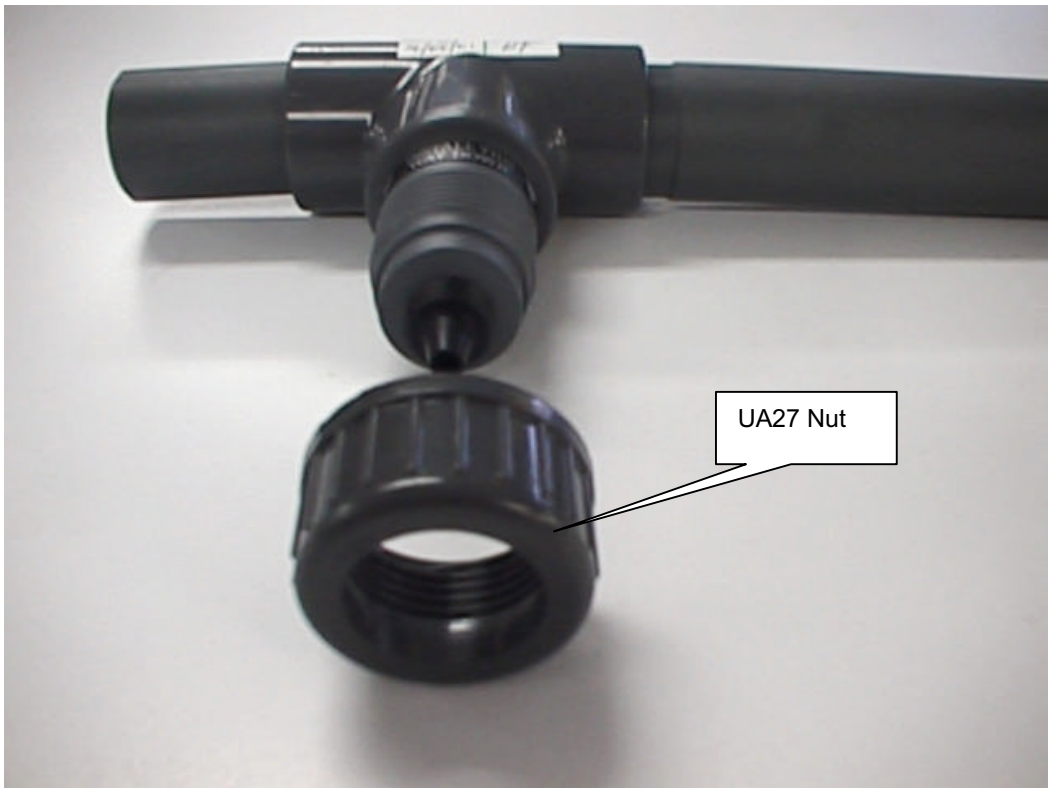

4. Pull out AAS993 retainer and replace O ringOB95.

5. Remove valve seat SD114, complete with spring SL82. Replace O ring OB80.

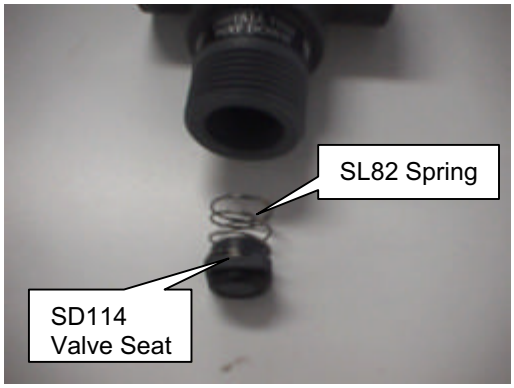

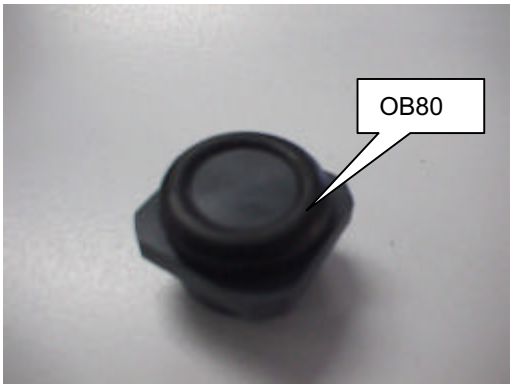

6. Using TE63 tool unscrew and remove SD113 ball seat

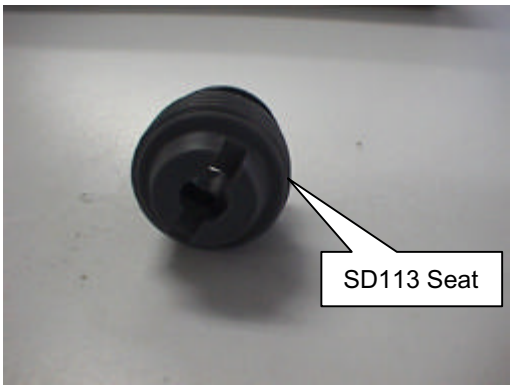

7. Replace OB94 and OB82 O rings

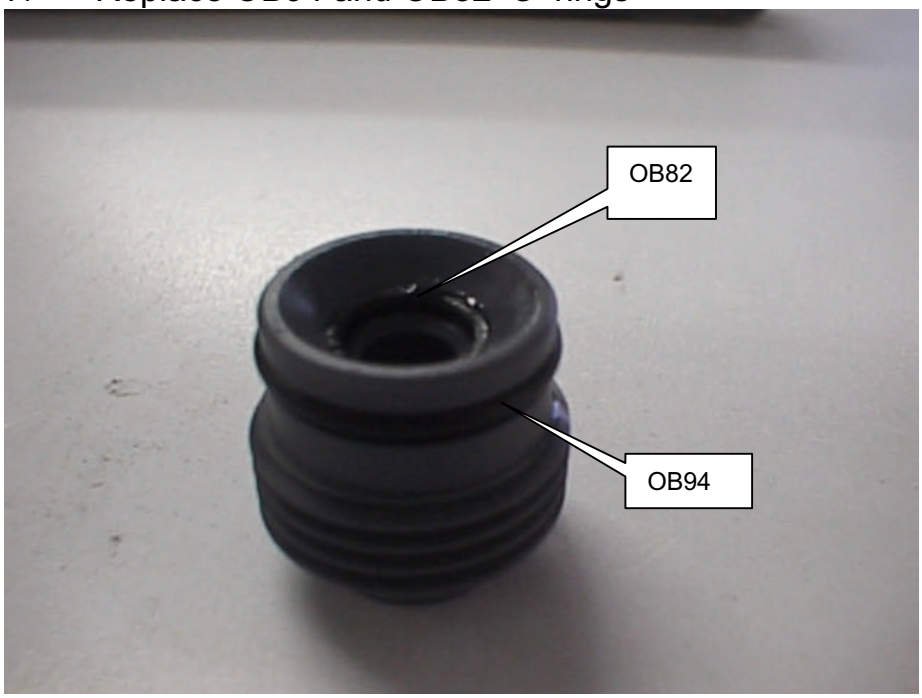

8. Reassemble in reverse order and replace in the stream
9. Reconnect tube and NE117 nut
10. Open isolation valves and test for leaks.

NOTE: OB94 and OB95 O rings and all plastic threads should be lubricated with chloroflourocarbon grease. OB80 and OB82 O rings should not be lubricated.

Cherwell PV

Changeover System

The Cherwell PV Changeover System is used to switch automatically from a duty to a standby gas supply. This ensures that the flow of gas used in a disinfection process is not interrupted when the duty supply is exhausted.
The Cherwell PV display panel has local indication of the system status and a manual changeover facility. Output contacts are provided to enable remote indication of the duty and standby gas supply status.

The Cherwell PV can also be linked to a gas detection system and will isolate the gas supplies in the event of a gas leak being detected.

- Pressure switch initiated changeover system
- Suitable for Chlorine, Ammonia, Sulphur Dioxide and Carbon Dioxide
- Drum or cylinder applications
- Local indication of status and contacts for connecting remote indicators
- Operates as part of a safe, vacuum dosing system
- Fail safe when both duty and standby gas supplies are exhausted
- Operates at exact preset levels
- Manual changeover facility
- Maintenance free

PORTACEL

Cherwell PV

HOW IT WORKS

The Cherwell PV system consists of a control panel, a three way motorised valve and two pressure switches. The valve is easily installed into a vacuum dosing system that has duty and standby gas supplies. The pressure switches are fitted on the header pipe work or vacuum regulator where they register the gas pressure in the duty and standby cylinders or drums.

When the gas supply pressure in the duty system has dropped to a pre-set level the pressure switch is activated and the signal sent to the control panel. The control panel then repositions the three way valve so that the standby gas supply is brought on-line.

The pressure switches are site adjustable and typically set to activate at 1 bar. This prevents a vacuum being created in the gas container.

Once the duty supply is exhausted and the standby supply is in use, the empty cylinders/drums can be safely replaced and the Cherwell PV reset. If the Cherwell PV is not reset in this way then on activation of the standby system pressure switch the valve closes to isolate the entire system.

Contacts are available for remote indication of the status of each gas supply and to provide an alarm in the event of a both supplies empty situation.

Technical Specification

Control Panel	Power supply	110 or 240 v AC 50/60 HZ
	IP Rating	IP 65
	Size	381 mm **x** 318 mm **x** 153 mm
	Weight	4.3 kg
Valve	Capacity	20 kg/hr, 40 kg/hr and 80 kg/hr are available
	Power supply	From control panel
	IP Rating	IP 65
	Connections	3/8" plain sockets supplied as kit. Fixing brackets part of kit
	Size	365 mm **x** 200 mm **x** 185 mm
	Weight	4.15 kg
	Materials in contact with gas	PVDF: Chlorine and Ammonia GRPP: Sulphur Dioxide
	Seals	Viton: Chlorine EPDM: Ammonia and Sulphur Dioxide
Pressure Switch	Connections	1/2" BSP parallel male gauge thread
	Size	120 mm **x** 80 mm **x** 100 mm
	Weight	0.9 kg

Fig. 1

Application drawing showing the Cherwell PV Drum Installation

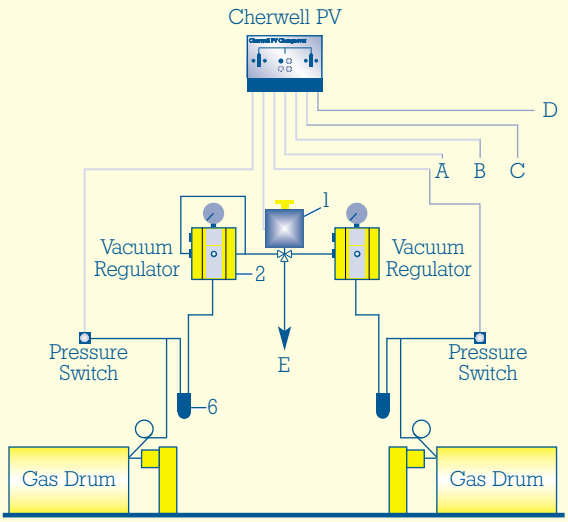

Fig. 2

Application drawing showing the Cherwell PV Cylinder Installation

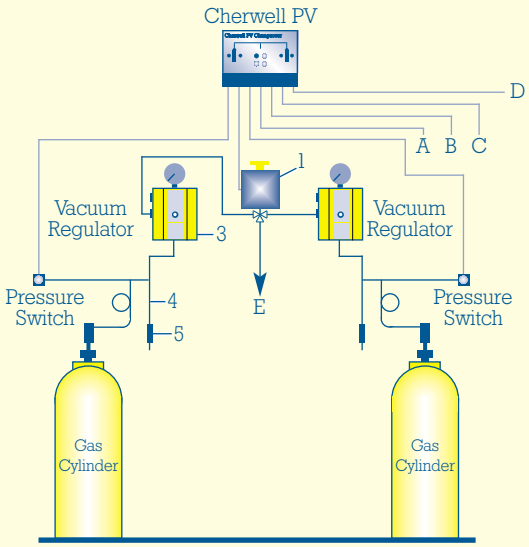

Key to Drum and Cylinder Application Drawings Above

1 Cherwell PV motorised 3 way valve
2 Wall mounted vacuum regulator
3 Yoke mounted vacuum regulator
4 Drop leg interceptor (cylinder only)
5 Heater (cylinder only)
6 Intercepting trap and filter (drum only)

A To remote indication (changeover has taken place)
B For plant shutdown
C From leak detector for shutdown on gas leak
D 110v or 240v power supply
E To gas doser

Electrical connections
Pipe connections

Product Dimensions

Fig. 3

Cherwell PV Changeover System
All Dimensions in millimetres
Do not scale

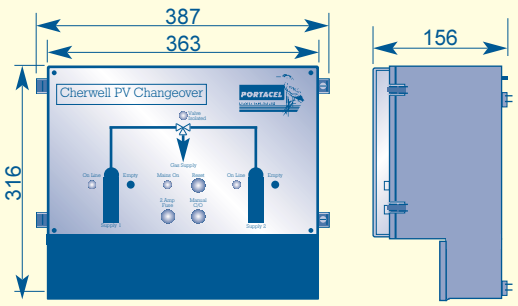

Fig. 4

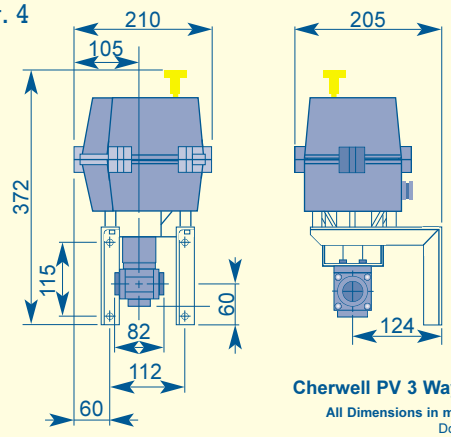

Cherwell PV 3 Way Valve
All Dimensions in millimetres
Do not scale

Cherwell V

HOW IT WORKS

The Cherwell V is connected to two vacuum regulators and a gas doser.
The vacuum created by an ejector opens the vacuum regulator and draws gas from the duty gas cylinder. This passes through the Cherwell V to the gas doser where the flow rate of gas is controlled.
At this stage a diaphragm valve within the Cherwell V is positioned such that only the duty supply of gas is being drawn through the unit. Once the duty gas cylinder is empty the vacuum inside the Cherwell V increases and acts on the diaphragm valve causing it to switch over and allow gas from the standby cylinder to flow.
This operation allows a continual flow of gas to the doser. Once the exhausted cylinder is replaced the Cherwell V is ready to carry out the next changeover of gas supply.

Fig. 5

Application drawing showing a typical installation

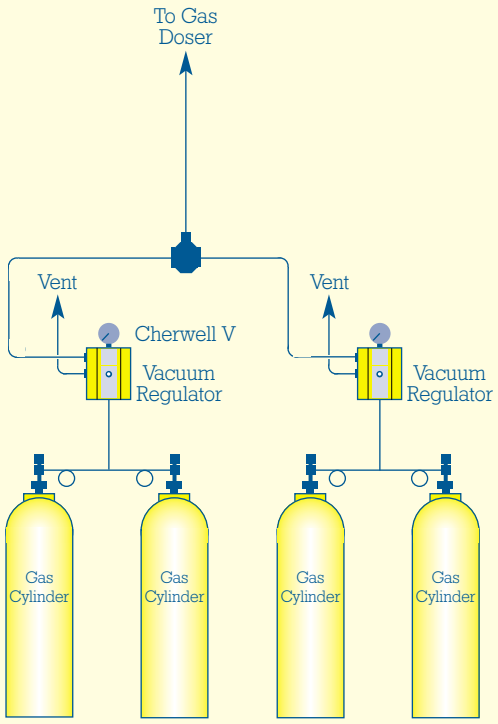

A visual indicator on the front of the Cherwell V shows which gas supply is in use.

Cherwell V Technical Data

Capacity	25 g/h - 4.0 kg/h, also 25 g/h - 12 kg/h
Weight	1.0 kg
Connections	1-outlet, 2 inlet compression couplings for 3/8" o/d x 1/4" i/d plastic tubing
Colour	Black
Materials of construction	Housings - uPVC
	Spring - Tantalloy
	Diaphragms & O-Ring seals - Special Viton cured rubber compound
	Screws - 316 Stainless steel
	Hinge pins - Tantalloy
	Indicator - PTFE
	Window - Borosilicate glass
Operating vacuum	20" wg working, 60" wg to operate changeover

Note: Information on the Cherwell P Pressure Changeover System is also available on request.

Cherwell V

Changeover System

The Cherwell V Changeover System is designed for vacuum dosing systems with flow rates from 25 g/h to 12 kg/h.
It is a safe, simple means of automating small disinfection plants by providing a changeover facility between duty and standby gas supplies.
The Cherwell V ensures that gas supply to the process is not interrupted either when the duty gas supply is exhausted or when the empty gas cylinders are replaced.

- Constructed from durable materials
- Reliable operation across a range of flow rates
- Safe changeover - automatic switching from duty to standby gas supplies ensures uninterrupted gas flow, even when plant is unattended
- Safe - system resets automatically when empty cylinder is replaced
- Safe - forms part of a vacuum operated dosing system
- Safe - specially treated Fluorocarbon rubber valve seats
- Compact design

PORTACEL

AN ISO 9001 ACCREDITED COMPANY

General Specification

Automatic:

A pressure switch on each supply gas header will monitor the cylinder/drum gas pressure. When the pressure in the duty system drops to the set point the switch will operate and signal the control panel to carry out a changeover.

The three way valve in the vacuum system will be repositioned to bring the standby gas supply on-line with no interruption to gas flow.

Indication of the status of each gas supply system is displayed locally on the control panel and can be displayed remotely using volt free contacts.

When the exhausted supply is replaced the reset push-button must be operated. Failure to replace the exhausted supply and operate the reset will lead to the valve isolating the system and sending a both supplies empty alarm once the standby supply is also exhausted.

Manual:

An integral push-button will be provided to initiate a manual changeover. The system will only perform the changeover if the selected gas supply is available.

External Shutdown:

There will be the facility to isolate the entire system via the three way valve in the event of receiving an external alarm signal such as from a gas leak detector.

On application of mains:

(i) 'Mains On' Lamp Illuminates

(ii) Supply 1 or 2 'On Line' Lamp Illuminates

Assuming both gas supplies are available, the Cherwell PV will select which supply to put on-line. Either supply can also be selected via the 'Manual C/O' push-button.

When one supply is empty:

(i) The 'Empty' lamp of the depleted supply will illuminate.

(ii) The 'On Line' lamp of the depleted supply, will extinguish.

(iii) The 'On Line' lamp of the standby supply will illuminate.

The depleted supply must now be replaced.

When the reset push-button is pressed:

(i) The 'Empty' lamp will extinguish.

Further Information

For the complete solution to your disinfection requirements, Portacel offer a comprehensive range of products:

Gas Dosing - Liquid Dosing
Analysers - Monitoring - Safety Monitors
Evaporators - Ejectors - Regulators
Electro-chlorination - Cylinder Changeover
Cylinder/Drum Shutdown

For further information concerning Portacel Cherwell Changeover Systems or any other products offered by Portacel please contact the Sales Department at the address and telephone number shown below.

Portacel
Winnall Valley Road
Winchester, Hampshire
U. K. SO23 0LL
Tel: +44(0)1962 705200
Fax: +44(0)1962 705279
e-mail: portacel_sales@tmproducts.com
A part of T M Products

PORTACEL
DISINFECTION SYSTEMS

Visit the Portacel website for further information on this and other Portacel products. http://www.portacel.co.uk

We reserve the right to change the design and specification without notice © T M Products Port DS. 007. 5k. 02.99

Thames

Gas Dosing Unit

The Thames Gas Dosing Unit doses a disinfecting gas into a water supply. This can be up to 60 kg/hr of chlorine or sulphur dioxide and 30 kg/hr of ammonia. In conjunction with an analyser the Thames will dose a gas under precise control.

The unit can be wall or floor mounted and is compact, easily maintained and an integral part of a Portacel package for water treatment.

The Portacel Auto Valve Positioner (AVP) or Flow Proportional Controller (FPC) are used for automatic control. Manual operation only versions are also available.

- Wide dosing range - up to 60 kg/hr
- Suitable for a range of disinfecting gases - Cl_2, SO_2, NH_3
- Precision control of gas flow using linear area control valve
- Safe operation - system works under vacuum
- Modular construction, wall or floor mounting
- Frontal access to unit ensures economic use of space and ease of maintenance
- High grade materials ensure reliability and durability
- Low part count

PORTACEL

AN ISO 9001 ACCREDITED COMPANY

Thames

HOW IT WORKS

The Thames dosing system operates under a vacuum which is generated by passing water through an ejector. For applications with a variable water flow through the ejector an optional differential regulator is available.

Gas is conveyed to the vacuum regulator which can be mounted either on a wall or for increased safety, directly to a header system. If the pressure in the regulator exceeds atmospheric pressure the excess gas is vented off safely. If the gas supply fails a high vacuum shut off valve isolates the regulator from pressurised pipework. A vacuum switch provides a continual indication of the status of the system.

The actual flow of disinfecting gas is controlled by a linear valve which can be driven by either a FPC or AVP. The flow is measured by a variable area meter which can be protected from high vacuum by an optional vacuum relief valve.

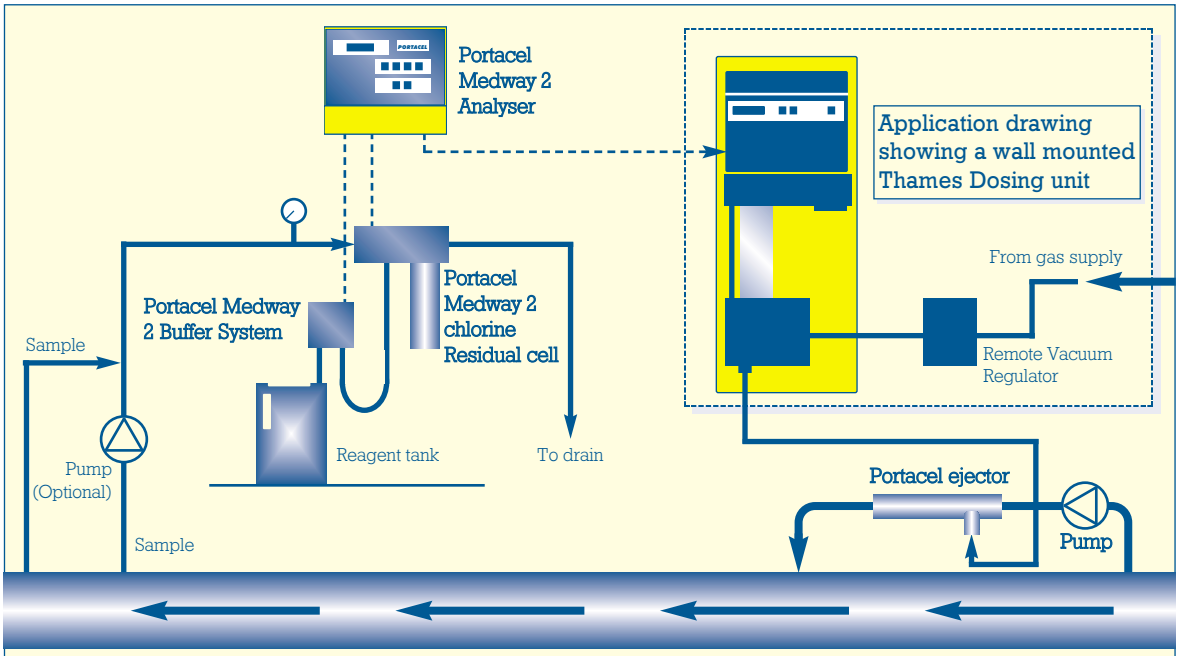

Fig 1

Product Dimensions

Fig 2

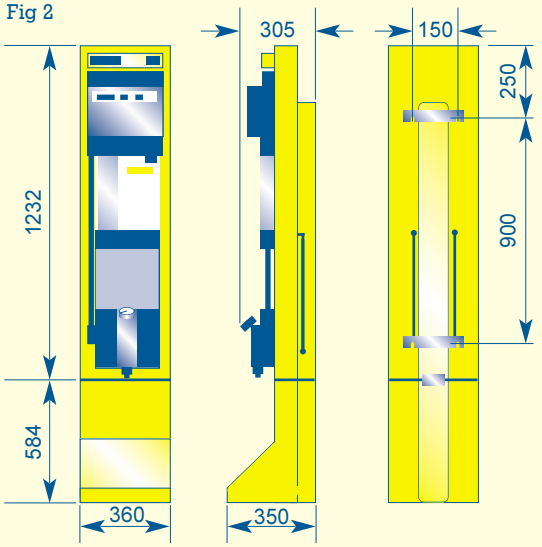

Floor Mounted Thames Dosing Unit
All Dimensions in millimetres. Do Not Scale

Fig 3

Wall Mounted Thames Dosing Unit

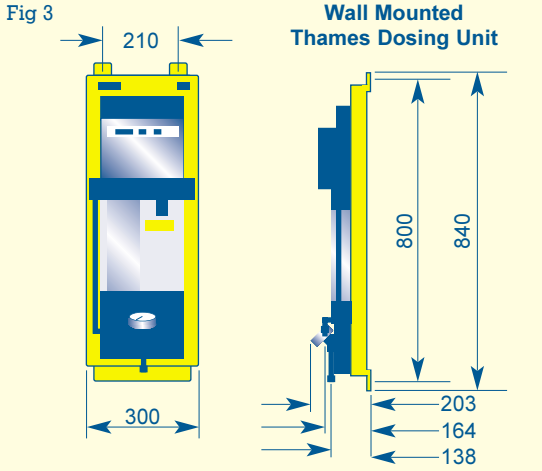

All Dimensions in millimetres. Do Not Scale

Fig 4

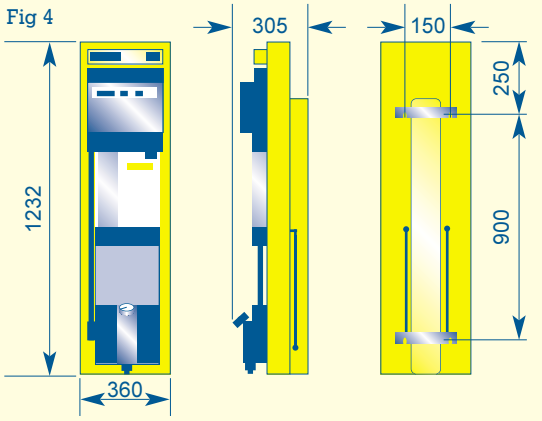

Wall Mounted Thames Dosing Unit (High Capacity)
All Dimensions in millimetres. Do Not Scale

General Specification

The Chlorinator* shall be a Thames model manufactured by Portacel. The Chlorinator* shall be vacuum operated by means of a Portacel Ejector. The Chlorinator* will be wall/floor mounted and provide for a gas flow of .... kg/hr. All mounted equipment shall be coupled together using O-ring joints and shall be accessible from the front to allow easy cleaning and maintenance.

A vacuum regulator mounted on the chlorinator or remote panel shall be provided with a gas pressure gauge, a gas inlet heater, a high vacuum shut-off facility and a pressure relief valve. The regulator shall feed gas to a variable area flow meter which shall be connected directly to a control valve. A vacuum relief valve can be provided as an option to protect the system should the vacuum become excessive. On capacities up to 40kg/hr an optional differential regulator can be provided in order to maintain a constant vacuum across the control valve and allow for pressure fluctuations at the ejector. To monitor the Chlorinator,* an optional vacuum switch and visual button shall be provided to indicate high or zero vacuum status.

Option 1: Automatic AVP

The Chlorinator,* shall be adapted to automatic control by the addition of an Auto Valve Positioner (AVP). A water flow signal and residual signal shall be used to set a gas flow rate by positioning a control valve.

Option 2: Automatic FPC

The Chlorinator* shall be adapted to automatic control by the addition of a Flow Proportional Controller (FPC). A water flow signal shall determine a proportional gas flow rate which shall be set by a control valve.

Option 3: Manual

* Sulphonator/Ammoniator

AVP Controller

HOW IT WORKS

The AVP Controller is used to vary the dose of disinfecting gas in response to two analogue signals. An input signal from a flowmeter is used to position a control valve and set a gas flow rate. This rate is precisely adjusted by measuring the residual levels of the disinfecting gas in the treated water. The system allows a time lag between the two inputs to ensure that a change in gas flow has time to register at the point of analysis.

Output terminals are provided so that valve position indication is possible.

AVP Technical Data

Range	5 to 200%, 1% steps
Overall Dimensions	250mm x 225mm x 115mm
Weight	2.5 kg
Service requirements	240v or 115v 50/60Hz or 24v DC internally selectable operation. Internal fuse at 0.5 amp (quick blow)
Operating temperature	-10° to 50° C
Enclosure protection	IP55
Power consumption	30 Watts
Connections	Remote call to service. Signal in: Typically from a flow meter Signal in: Typically from a residual analyser RS232 connection supplied to enable interrogation and calibration via a PC.

Flow Proportional Controller

HOW IT WORKS

The Flow Proportional Controller is used to vary the dose of disinfecting gas in response to a single analogue signal. This signal usually comes from a flow meter with gas flow being adjusted in proportion to water flow. The controller has the facility for proportional dosing over a range of 4:1 and 1:4. Gas flow is adjusted by a servo motor driving the control valve in the dosing unit. The valve position then provides an output signal which can give a direct indication of gas flow. Remote indication of controller status is possible in automatic mode using a relay contact provided.

Flow Proportional Controller Technical Data

Range	5 to 200%, 1% steps
Overall Dimensions	250mm x 225mm x 115mm
Weight	2.5 kg
Service requirements	240v or 115v 50/60Hz or 24v DC internally selectable operation. Internal fuse at 0.5 amp (quick blow)
Operating temperature	-10° to 50° C
Enclosure protection	IP54
Power consumption	6 Watts
Connections	Remote call to service Signal in: Typically from a flow meter RS232 connection supplied to enable interrogation and calibration via a PC
Enable/Disable	The FPC defaults to standby when remote volt free contacts are closed. The valve is closed
RFI/EMC	The FPC complies with current RFI and EMC regulations

AVP Controller

Automatic Residual Control

The Auto Valve Positioner (AVP) is a dedicated microprocessor used to precisely position a control valve in response to a flow signal and /or residual analysis.

- Precise flow and/or residual control
- Simple, menu driven programmer requires no software knowledge
- Suitable for control of Cl_2, SO_2, NH_3

Flow Proportional Controller

Automatic Flow Control

The Flow Proportional Controller (FPC) responds to a flow signal and positions a servo motor driving a control valve.

- Enhanced accuracy due to direct doser mounting
- Site calibration gives linearity and repeatability across operating range
- Suitable for control of Cl_2, SO_2, NH_3

PORTACEL

Thames Gas Dosing Unit Technical Data

Automatic Thames	Flow Proportional Thames	Manual Thames
40kg/hr (60kg/hr without differential Regulator)	40kg/hr (60kg/hr without differential Regulator)	40kg/hr
Mounted onto glass fibre back panel	Wall Mounted	Vacuum Gauge
AVP controller (Flow and Residual)	Differential regulator	Differential regulator
Differential regulator	Vacuum Gauge	Vacuum Switch
Vacuum Switch	Meter Tube	Meter Tube
Meter Tube	Control Valve Mounted on GRP Panel	Control Valve
Control Valve	Vacuum Tubing	
Vacuum Tubing		

Weight - Floor Standing	24kg
Weight - Wall Mounted	(High Capacity)19kg (Standard)11.5kg
Operating Temperature	0 - 50°C
Connections	3/4"uPVC
Enclosure Protection	AVP IP55 FPC IP54
Colour	Black components mounted on an integrally coloured yellow GRP panel
Displays	Meter Tube
Vacuum Gauge	1-800 mbar, 63mm diameter mechanical movement with silver diaphragm, protective seal
Fire Resistance	Self Extinguishing
Construction Materials	uPVC housing and plastic parts, silver and Tantalum alloy inlet valve. Teflon seats, FEP diaphragms, tantalloy springs, copper alloy inlet manifold (nickel coated), Flurocarbon rubber special compound 'O' rings, 316 stainless steel, chemical blackened screws. Lubricant - Chloroflucarbon grease.
Gas Flow Indicator	Variable area borosilicate glass flow meter with black rotating float or ball and graduated scale calibrated in grams per hour, kilograms per hour or pounds per day. Meter tube length - 150mm or 300mm depending on capacity

Further Information

For the complete solution to your disinfection requirements, Portacel offer a comprehensive range of products:

Gas Dosing - Liquid Dosing
Analysers - Monitoring - Safety Monitors
Evaporators - Ejectors - Regulators
Electro-chlorination - Cylinder Changeover
Cylinder/Drum Shutdown

For further information concerning Portacel Thames Gas Dosers or any other products offered by Portacel please contact the Customer Service department at the address and telephone number shown below.

Portacel
Winnall Valley Road
Winchester, Hampshire
United Kingdom,SO23 0LL
Tel: +44(0)1962 705200
Fax: +44(0)1962 705279
A part of T M Products Limited.

PORTACEL
DISINFECTION SYSTEMS

We reserve the right to change the design and specification without notice © T M Products Limited. Port DS. 005. 5k. 10.97

Thames Doser – 12KG
Method of Service

Before servicing can be carried out on the Thames doser, it should be flushed through with air for several minutes to evacuate as much gas as possible. With the vacuum running, the gas should be isolated and, with the doser valve open, disconnect the gas inlet pipe below the bottom meter tube block.

After flushing, turn off the vacuum source and disconnect the vaccum pipe from the bottom of the differential regulator.

Spares kit AAS1411 is required in order to service a Thames automatic doser. AAS1411 spares kit comprises of the following:

Part No.	Description	Qty
DB36	Diaphragm	2
DB32	Diaphragm	1
FA41	Filter	1
OA30	Orifice	1
OB100	O Ring	5
OB101	O Ring	3
OB102	O Ring	1
OB103	O Ring	1
OB104	O Ring	2
OB106	O Ring	1
OB109	O Ring	1
OB114	O Ring	2
OB115	O Ring	2
OB125	O Ring	2
OB126	O Ring	4
OB133	O Ring	1
OB141	O Ring	1
OB142	O Ring	2
OB15	O Ring	1
OB46	O Ring	1
OB52	O Ring	1
OB58	O Ring	1
OB68	O Ring	2
OB80	O Ring	1
OB89	O Ring	3
OB92	O Ring	1
SD117	Seat	1
SM159	Grub Screw	2

This spares kit covers all variations of the automatic Thames 12kg doser so when the service is complete there will be unused parts left over.

1. Unscrew and remove the cover retaining screws (SM54) and remove the cover (CP108).

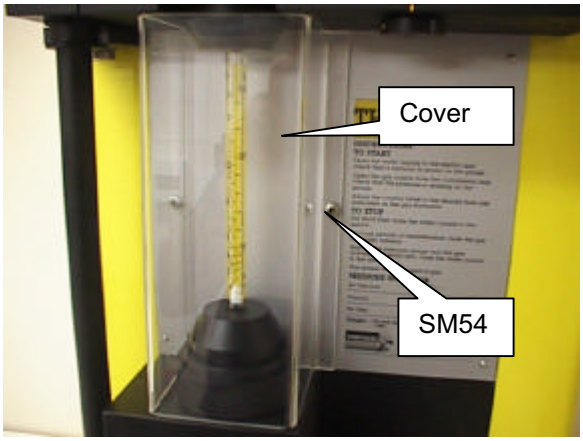

2. Turn the knurled ring of the meter tube connector counter clockwise as far as it will go and then push down on the meter tube connector assembly until the meter tube becomes loose. Remove the meter tube.

Care should be taken when carrying out this procedure to avoid damage to the meter tube and possible injury if the glass should break.

3. Pull to remove the adaptors from both ends of the meter tube. Replace the O rings on the inside of the adaptors. The part numbers for the adaptors and O rings are dependant on the size of the meter tube (see table below).

Tube Capacity	Adaptor	'O' Ring
50 – 250 gm hr	FC240	OB104
500gm – 2kg hr	FC241	OB101
5 – 12kg hr	FC245	OB125

Replace the O ring (OB102) on the outside of the top adaptor.

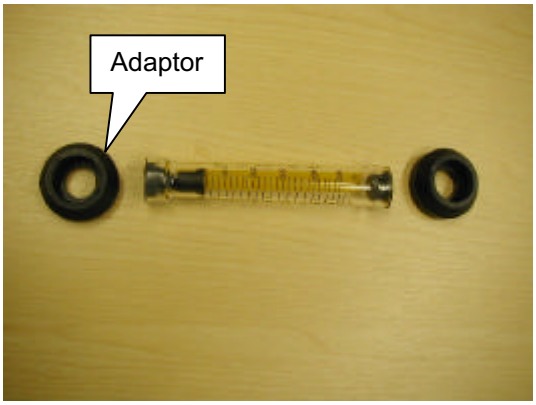

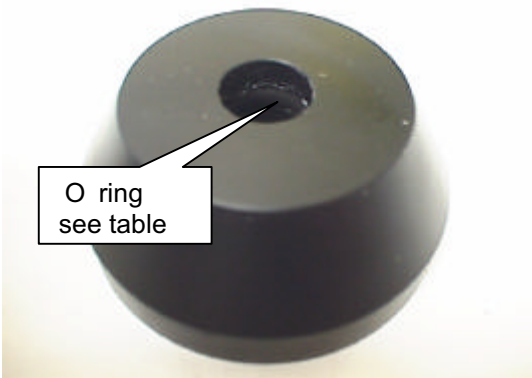

4. Remove the bypass pipe (AAS1261) by removing the two screws (SM131) on the end of the control valve block assembly, and pulling the tube out of the side of the differential regulator.

5. Replace O rings (OB100 and OB 89) on the bypass elbow and replace O rings (OB114 and OB52) on the connector (CO27).
Reassemble bypass pipe and place to one side.

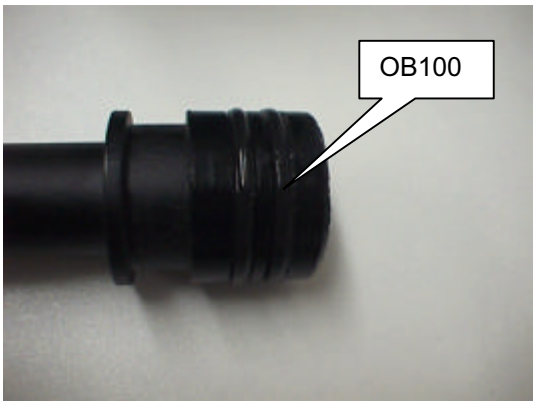

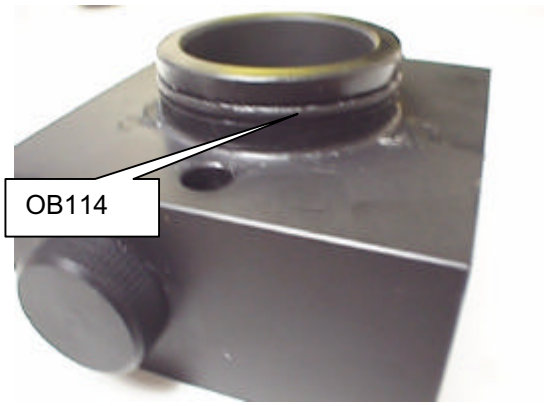

6. Remove the two screws (SM128) securing the lower meter block to the back panel. Pull forward and up to remove the lower meter block from the differential regulator.

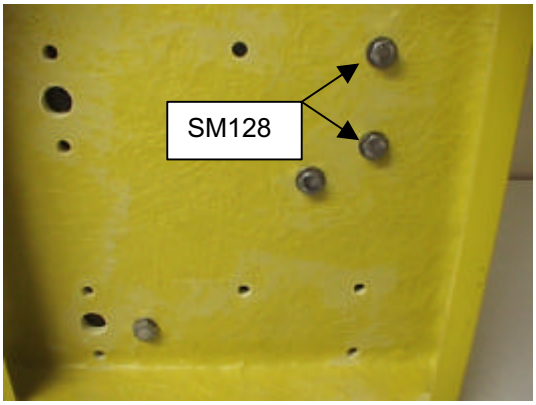

7. Remove bolt (SM128) and retaining plate (RE84). Pull inlet pipe from lower meter block. Replace O rings (OB100). Remove connector (CO29) and replace O rings (OB115). Replace connector. Pull meter connector (CO30) from lower meter block and replace O rings (OB103 and OB114). Replace meter connector and inlet pipe into lower meter block. Place to one side.

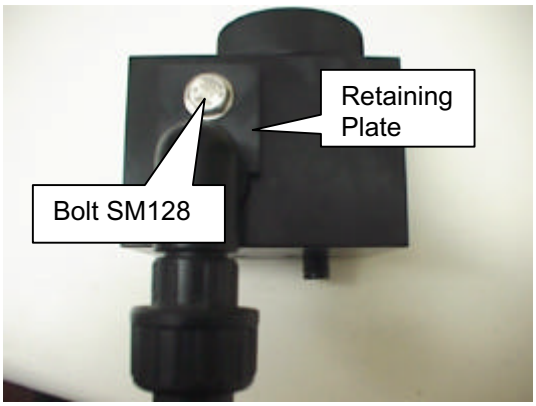

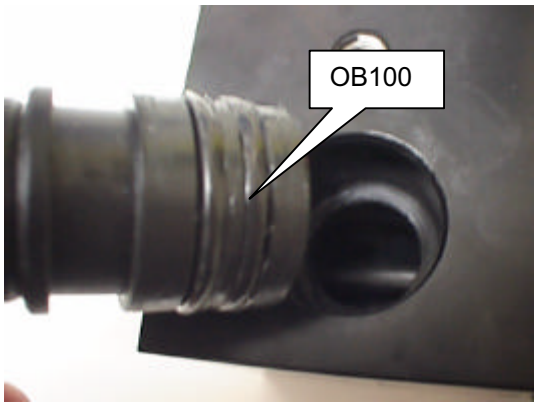

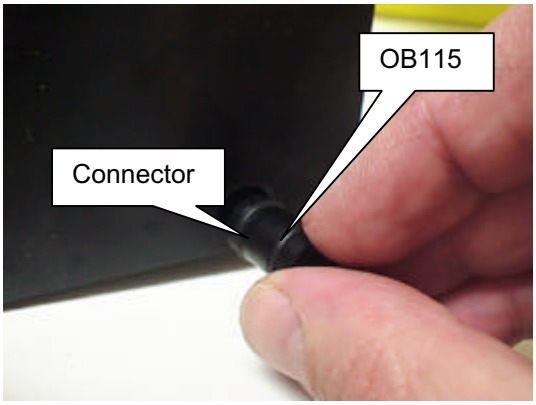

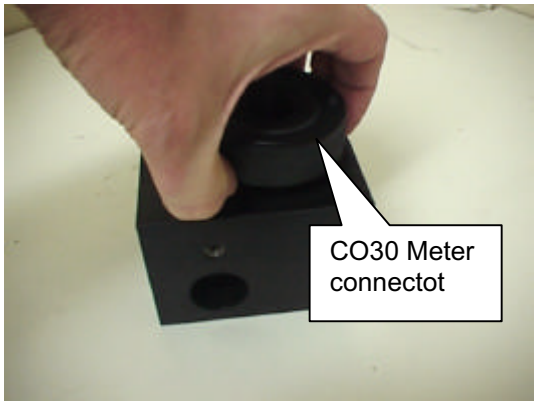

8. Unscrew and remove vacuum gauge (GB44). Remove screws (SM166 and SM167) and pull outlet block assembly (AAS1258) from differential regulator body assembly. Remove valve (VA56) and replace O rings (OB100 and OB101).

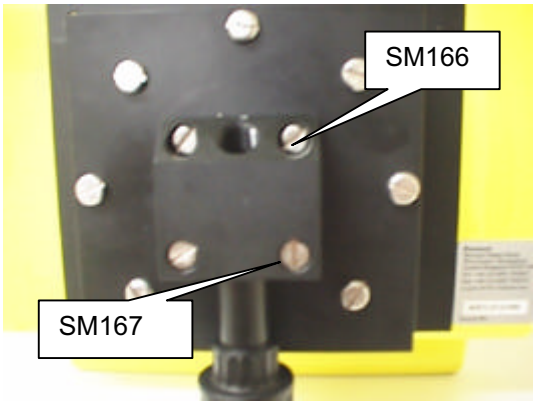

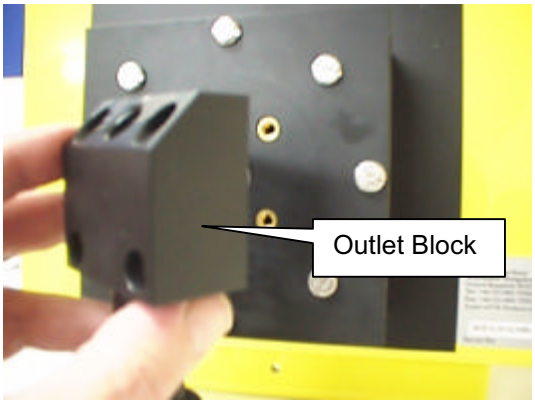

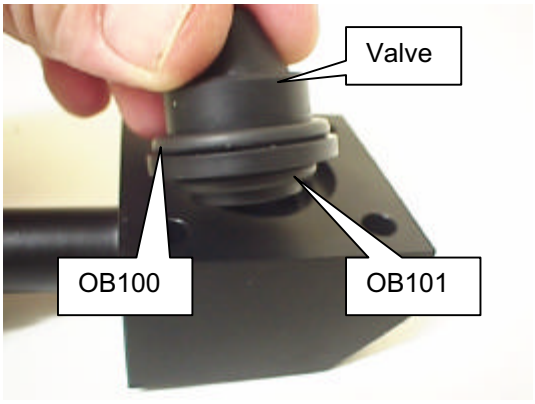

9. Remove eight screws (SM53) and separate front body (AAS1287) from back body (BH219). If a vacuum alarm switch is fitted, the front body will need to be pulled downwards and forwards to disconnect the connector between differential regulator and vacuum alarm switch. Replace O rings (OB15) on connector (not shown, see section 7).

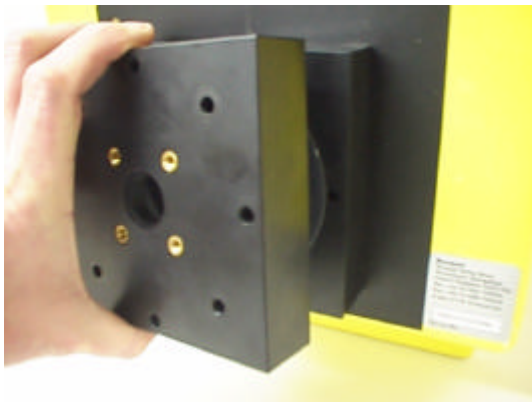

10. Replace O ring (OB92) on the inside of the front body. Care should be taken not to stretch this O ring. Remove the spring (SL83) and the diaphragm assembly from the back body. Push the seat (SD116) out of the centre of the diaphragm assembly. Replace O ring (OB46) and valve seat (SD117). It will be necessary to destroy the valve seat in order to remove it.

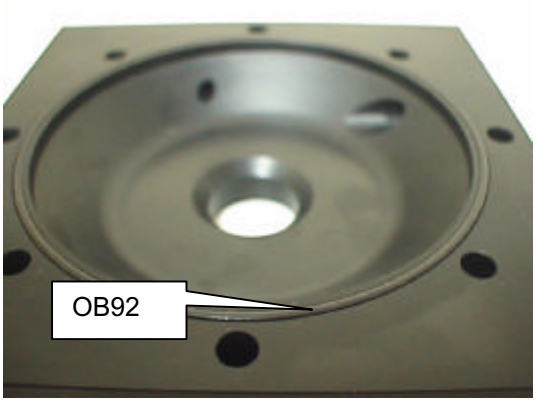

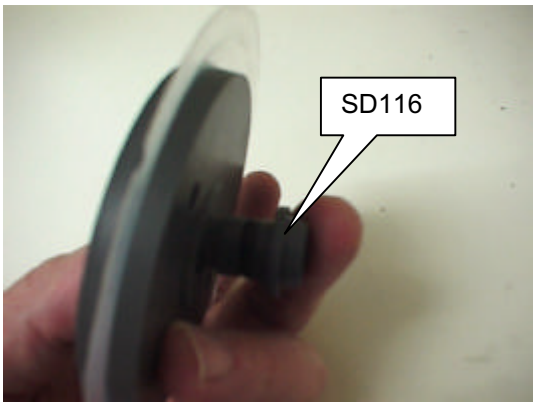

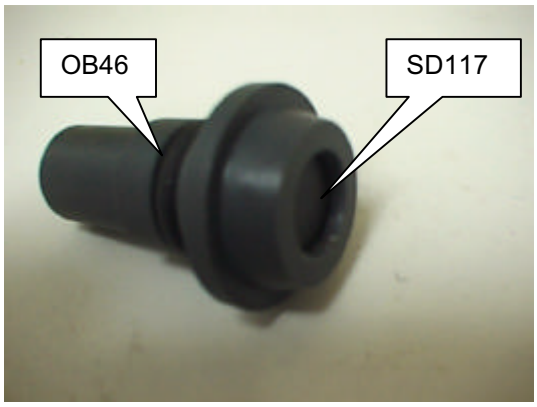

11. Using two special tools (TE63) unscrew the diaphragm ring (RB38) from the diaphragm plate (PF96). Replace diaphragm (DB32). Refit diaphragm ring and diaphragm plate together.

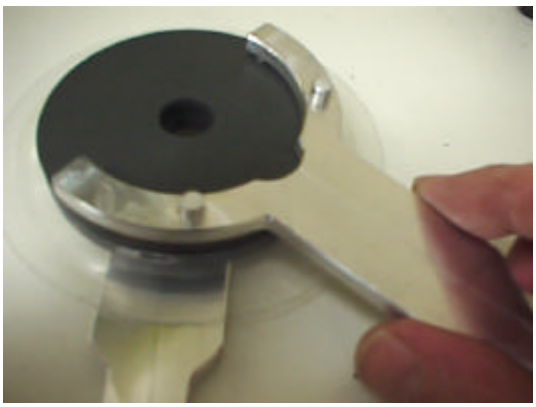

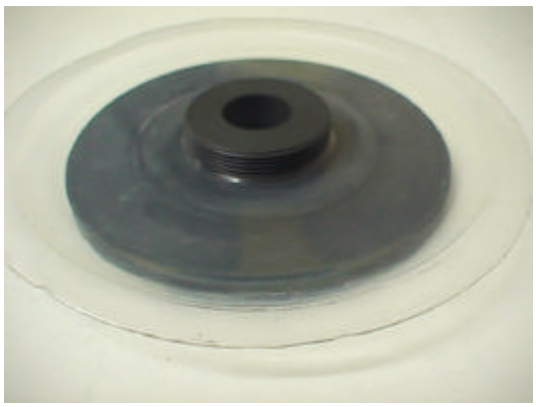

12. Refit seat retainer into centre of diaphragm assembly, ensuring it is fitted the correct way round. Re assemble the differential regulator in reverse order of dismantle.

13. Refit the lower meter block, locating the connector into the differential regulator and the locating pin into the back panel. Secure the lower meter block with the two bolts.

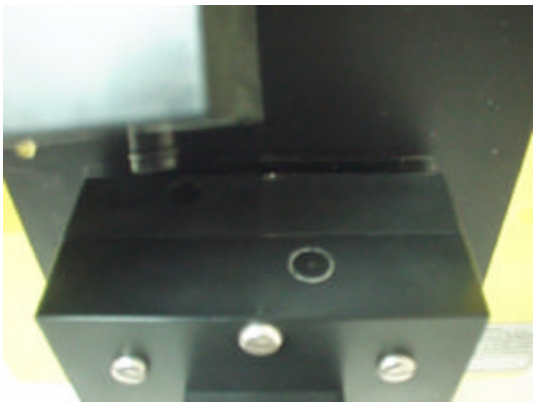

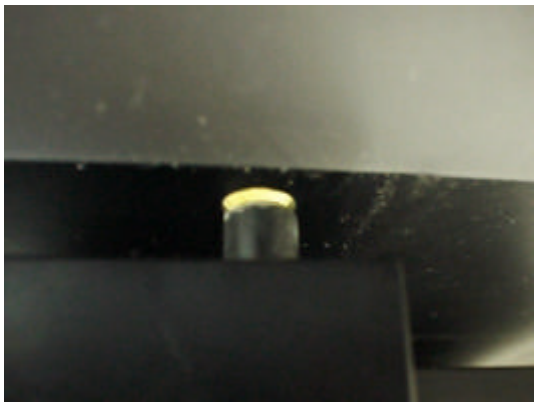

14. Before dismantling the vacuum alarm switch, if fitted, it is a good idea to mark the position of the front cap (CC133) in relation to the body (AAS986) using a marker, so that it can be re aligned correctly on assembly. Remove the two screws (SM129) and remove the cap (CC133).

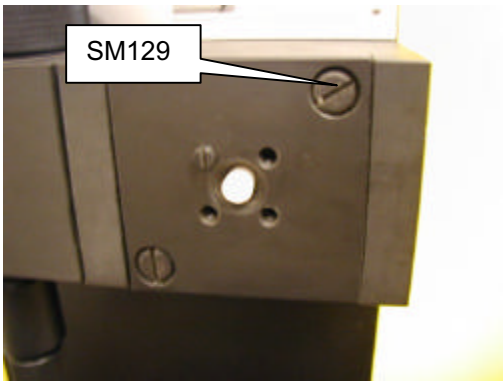

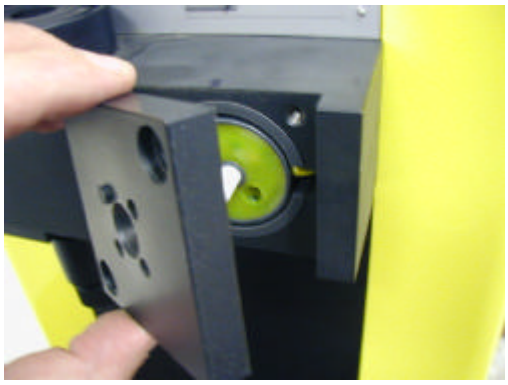

15. Loosen the cable gland (GD34) at the back of the doser, behind the vacuum alarm switch. Push the cable in towards the vacuum alarm switch and, at the same time, pull on the vacuum alarm switch in order to remove it from the body.

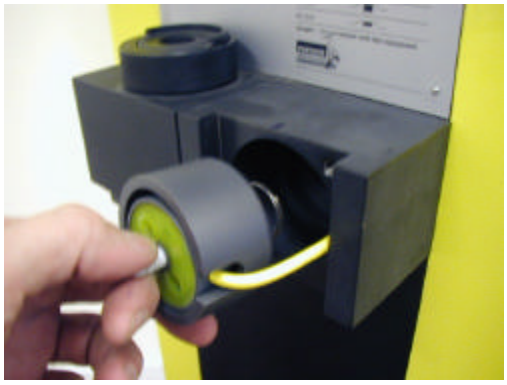

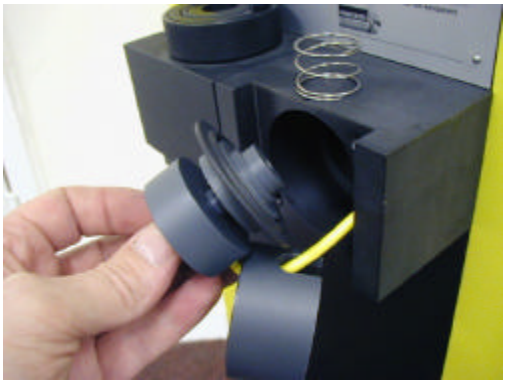

16. Unscrew the diaphragm assembly from the switch unit. Using tools (TE65 and TE66) separate the diaphragm bolt (SC62) from the diaphragm nut (NE126). Replace the diaphragm (DB36). Re assemble the vacuum alarm switch.

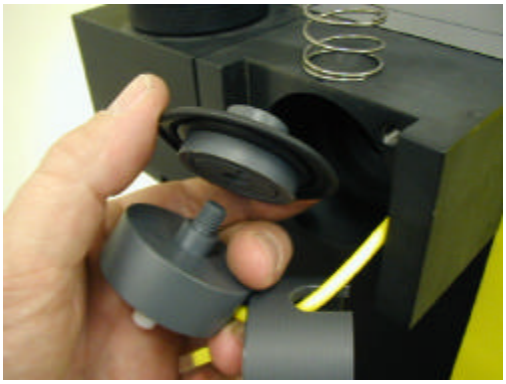

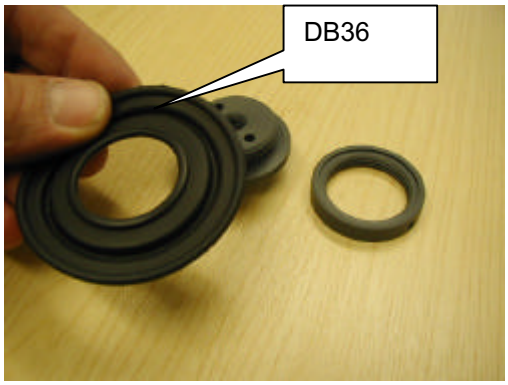

17. This section covers dosing units with vacuum relief valves and units without vacuum relief valves. If the doser has a vacuum relief valve fitted, follow steps 17 – 19. If no vacuum relief is fitted, go to step 20.

18. Unscrew and remove the four screws (SM130). Remove the vacuum relief cap (AAS679), complete with the diaphragm assembly.

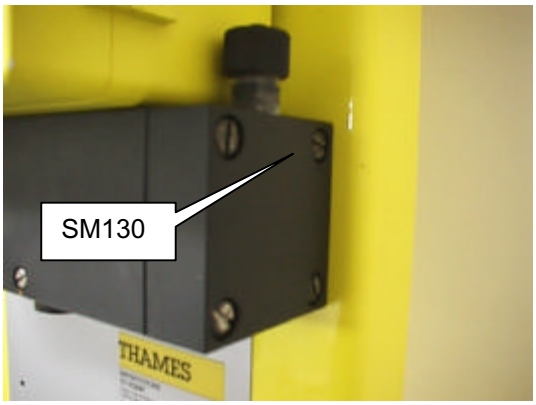

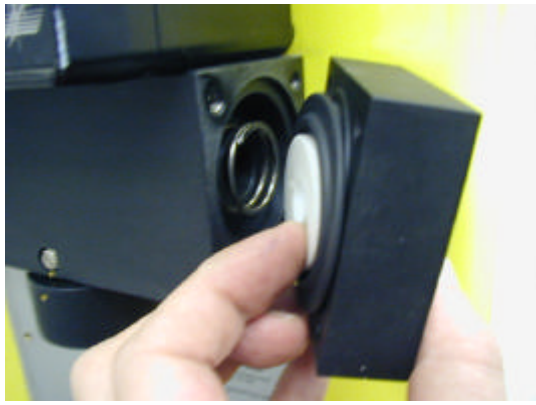

19. Remove the diaphragm assembly from the cap. Using tools (TE65 and TE66) separate the diaphragm assembly and replace the diaphragm (DB36).

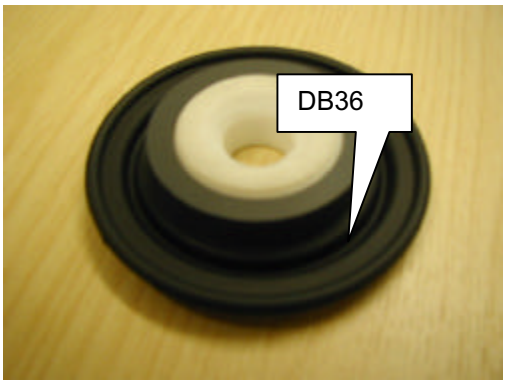

20. Remove the spacer (SK97) from the cap. Replace the O ring (OB80) and the filter (FA41). Refit assembly, making sure that the diaphragm is the correct way round.

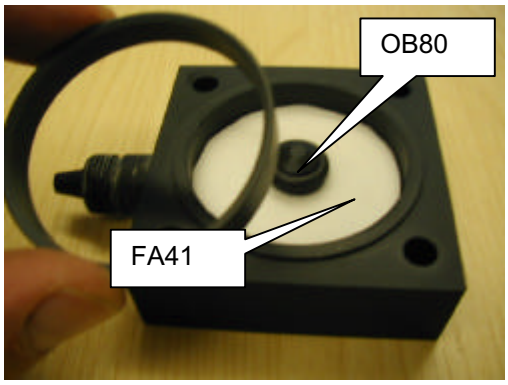

21. Remove the four screws (SM125) and remove cap (CC135). Replace O ring (OB58) and re assemble.

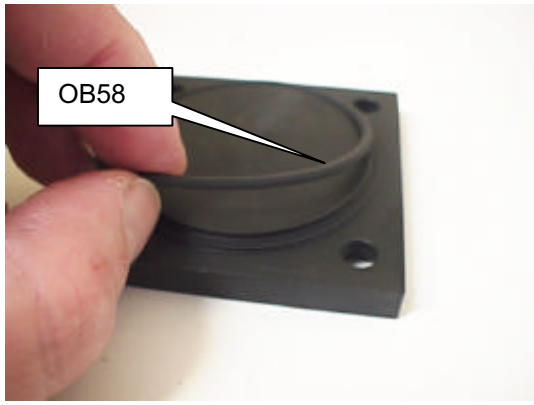

22. If dismantling of the control valve block is carried out in the following manner, when re assembled, the unit should not require re calibrating. With the valve fully closed, yellow dot on drive shaft lining up with yellow dot on body, the valve stem should be protruding from the end of the body by 1 – 2 mm.

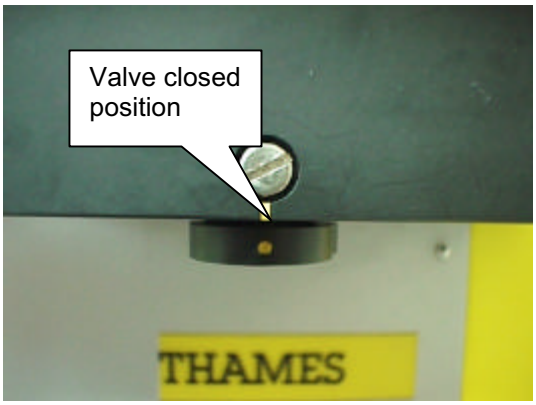

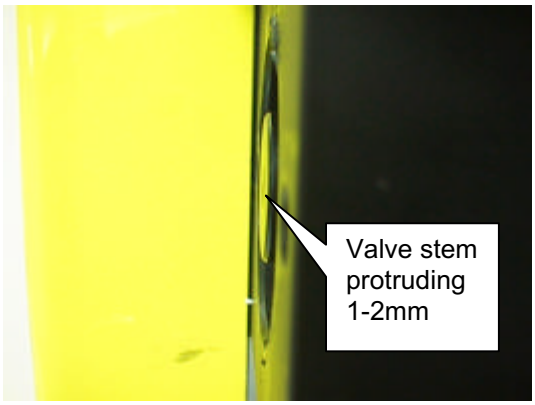

23. When the drive shaft is separated from the motor gearbox shaft, it is necessary to have all of the components in the valve closed position. Loosen the four screws on the door of the AVP and swing the door back on its hinges. There are two grub screws securing the drive shaft to the motor gearbox shaft. When the second grub screw is removed, the shafts should be in the valve closed position, so the valve should be opened in order to remove the grub screw furthest to the right first.

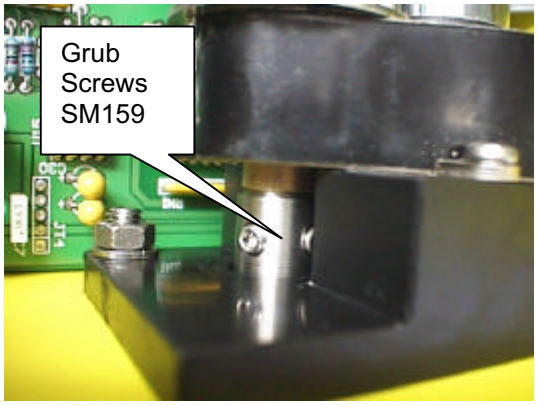

24. With the valve slightly open, remove the first grub screw. Close the valve fully and remove the second grub screw. Remove the shaft retaining screw (SC68).

25. Pull the drive shaft downward to remove it from the valve block. Replace O rings (OB89 and OB68). Place drive shaft aside.

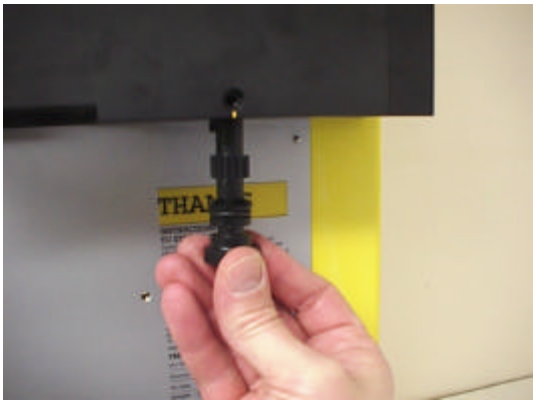

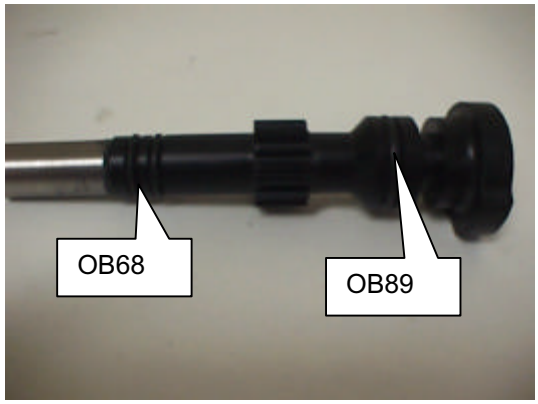

27. Hold on to the visible part of the valve stem and pull it from the valve block, complete with spacer (SK98) and orifice (OA30). Replace orifice (OA30) and O ring (OB106).
O RING (OB106) SHOULD NOT BE LUBRICATED.

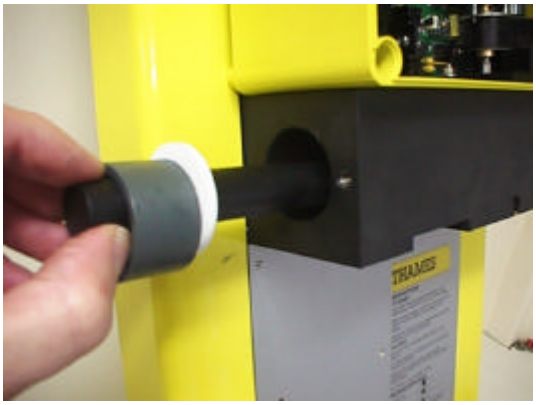

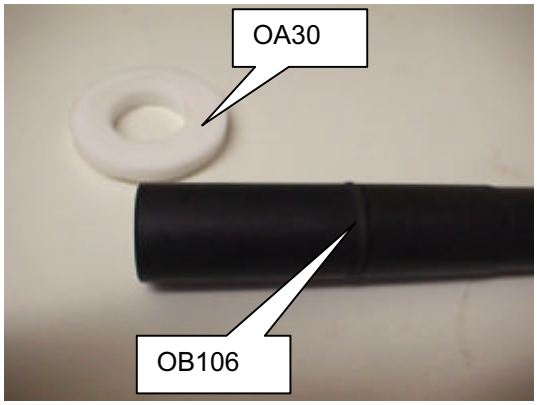

28. Replace O ring (OB133) inside the control block.

29. Remove motor gearbox cable from circuit board. Remove securing nuts (ND59) from motor bracket. Lift motor gearbox assembly out of the AVP. DO NOT ALLOW THE MOTOR GEARBOX ASSEMBL TO TOUCH THE CIRCUIT BOARD BEHIND IT DURING REMOVAL.

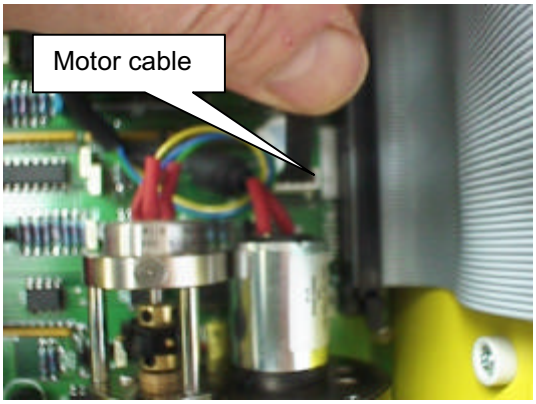

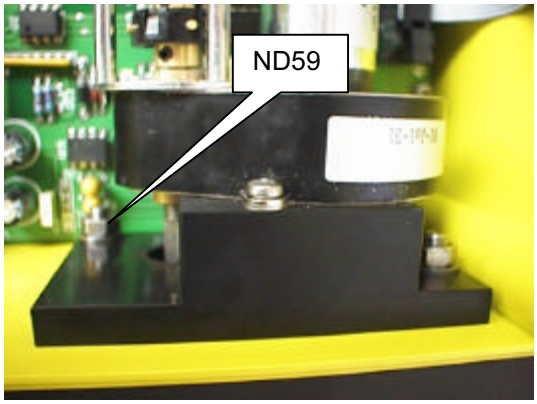

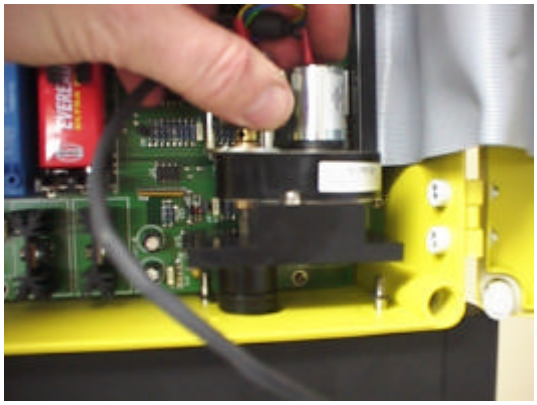

30. Replace O rings (2 x OB126 and 1 x OB109).

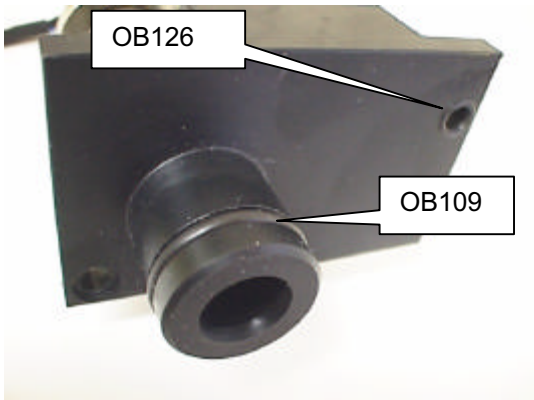

31. Refit the motor gearbox assembly in reverse order of removal.

32. Insert the valve stem, complete with orifice (OA30), into the control block, making sure that the teeth on the valve stem are facing the front of the block. Push valve stem into the block until approximately 1 – 2mm of the stem is protruding the end of the block.

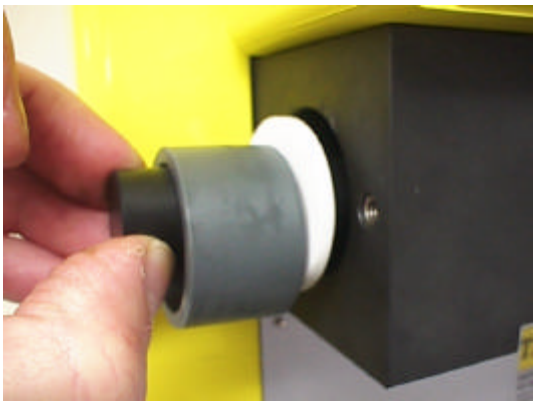

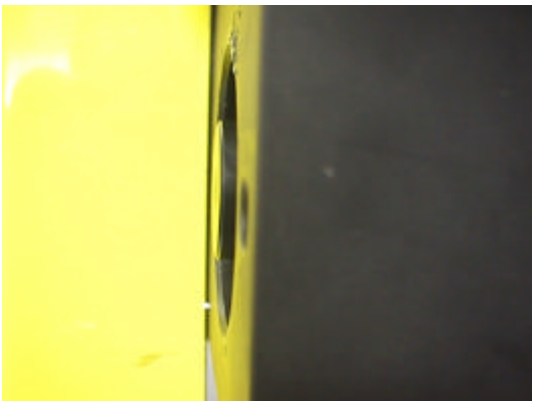

33. Insert the drive shaft into the block, ensuring that when the teeth of the drive shaft engage with the teeth of the valve stem, the yellow dot on the drive shaft is in line with the yellow dot on the valve block. Push in as far as is possible. Insert the first grub screw and tighten so that the drive shaft cannot move without the motor shaft.

34. When the first grub screw is tight, turn the drive shaft to gain access to the second grub screw hole. Fit second grub screw.

35. Refit bypass pipe assembly and secure with bolts, top and bottom. Refit meter tube in position and secure by tightening meter connector on lower meter block. Refit meter tube cover and secure with screws.

Thames Doser – 60KG
Method of Service Statement

Before servicing can be carried out on the Thames doser, it should be flushed through with air for several minutes to evacuate as much gas as possible. With the vacuum running, the gas should be isolated and, with the doser valve open, disconnect the gas inlet pipe below the bottom meter tube block.

After flushing, turn off the vacuum source and disconnect the vaccum pipe from the bottom of the differential regulator.

Spares kit AAS1414 is required in order to service a Thames automatic doser. AAS1414 spares kit comprises of the following:

Part No.	Description	Qty
DB36	Diaphragm	2
DB38	Diaphragm	1
OA30	O Ring	1
OB100	O Ring	6
OB101	O Ring	4
OB102	O Ring	1
OB103	O Ring	3
OB104	O Ring	2
OB105	O Ring	2
OB106	O Ring	2
OB109	O Ring	1
OB110	O Ring	1
OB112	O Ring	1
OB114	O Ring	2
OB115	O Ring	2
OB116	O Ring	1
OB117	O Ring	1
OB125	O Ring	2
OB126	O Ring	4
OB133	O Ring	1
OB139	O Ring	2
OB141	O Ring	1
OB142	O Ring	2
OB15	O Ring	1
OB52	O Ring	1
OB58	O Ring	1
OB80	O Ring	1
OB89	O Ring	1
SD101	Seat	1
FA41	Filter	1
SM159	Grub Screw	2

This spares kit covers all variations of the automatic Thames doser so when the service is complete there will be unused parts left over.

1. Unscrew and remove the cover retaining screws (SM54) and remove the cover (CP108 – short cover or CP109 – long cover).

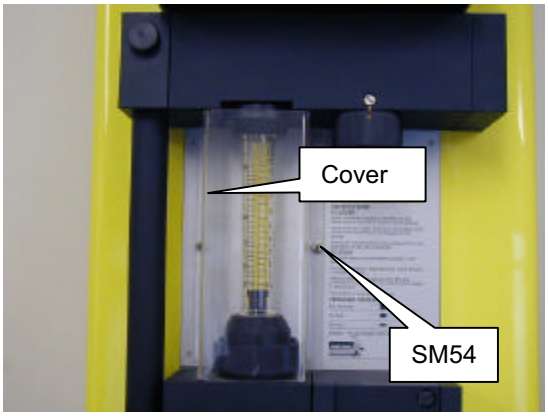

2. Turn the knurled ring of the meter tube connector counter clockwise as far as it will go and then push down on the meter tube connector assembly until the meter tube becomes loose. Remove the meter tube.

Care should be taken when carrying out this procedure to avoid damage to the meter tube and possible injury if the glass should break.

3. Pull to remove the adaptors from both ends of the meter tube. Replace the O rings on the inside of the adaptors. The part numbers for the adaptors and O rings are dependant on the size of the meter tube (see table below).

150mm Meter Tube Length

Tube Capacity	**Adaptor**	**'O' Ring**
50 – 250 gm hr	FC240	OB104
500gm – 2kg hr	FC241	OB101
5 – 12kg hr	FC245	OB125

300mm Meter Tube Length

Tube Capacity	**Adaptor**	**'O' Ring**
5kg hr	FC242	OB105
12 – 30kg hr	FC243	OB103
40 – 60kg hr	FC259 & FC260	OB139

Replace the O ring (OB102) on the outside of the top adaptor.

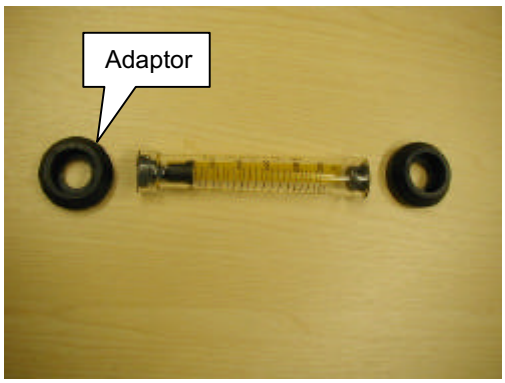

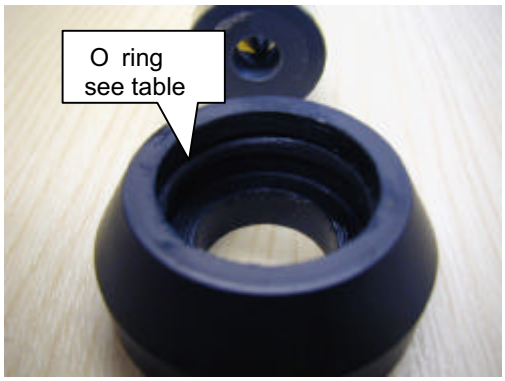

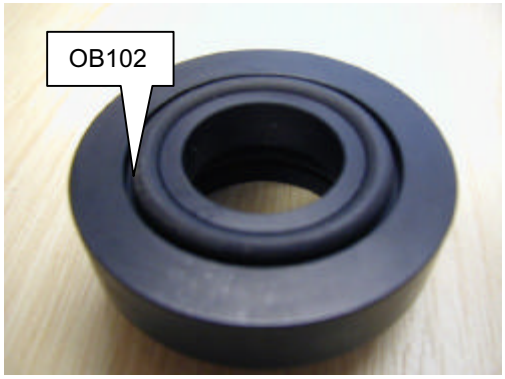

4. Remove the bypass pipe (PB125) by removing the two screws (SM131) on the end of the control valve block assembly, and the screw (SM133) on the side of the differential regulator. There is also a flexible hose connected to the bypass pipe which can be removed by unscrewing the retaining nut. This is located behind the bypass pipe at the differential regulator end.

5. Replace O rings (OB100) on the bypass elbow (AAS952).
Replace O ring (OB114) on the connector (CO27).
Pull the bypass elbow and connector from the bypass pipe and replace O rings (OB100) on both ends of pipe.
Reassemble bypass pipe and place to one side.

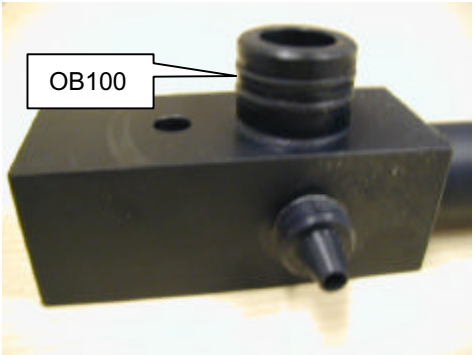

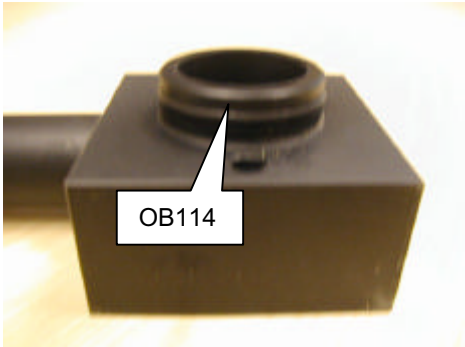

6. Remove the four screws (SM134) and remove the outlet block (BH161) from the differential regulator. Remove the valve (VA49) and replace O rings (OB101). Replace the valve back into the outlet block and place to one side. Replace O ring (OB112) in the front of the differential regulator front body (BH160).

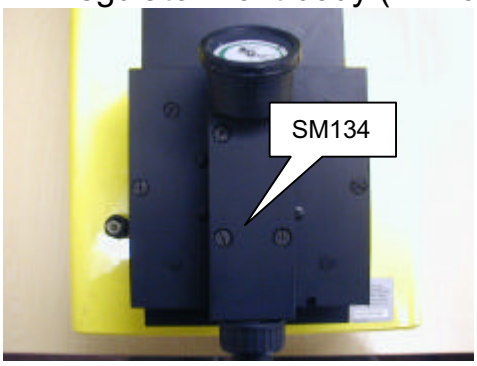

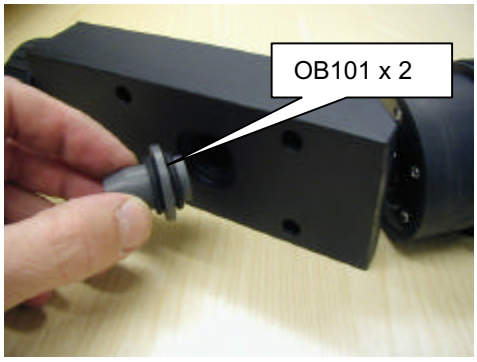

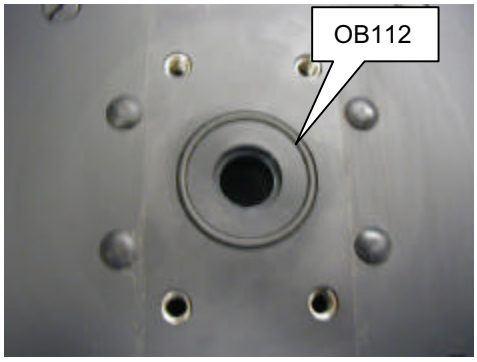

7. Unscrew and remove the 8 nuts (NE128) securing the front body to the back body. Separate the front and back body.

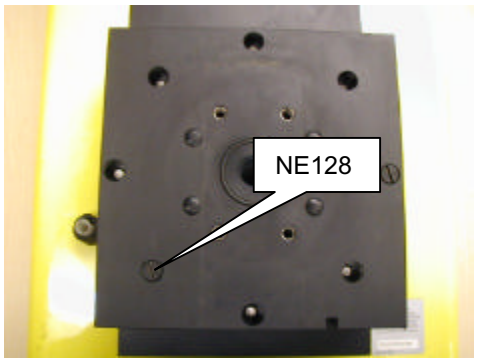

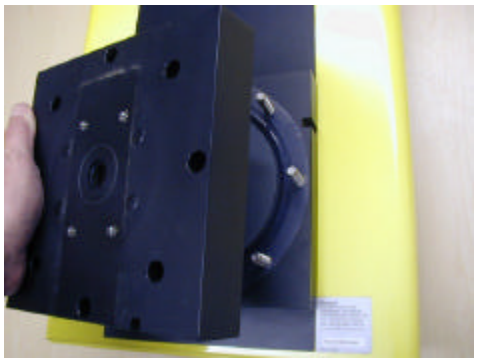

8. Replace O ring (OB116) on the inside of the front body (BH160). Care should be taken not to stretch this O ring. Remove the spring (SL76) and the diaphragm assembly from the back body (AAS670). Push the retainer (RE83) out of the centre of the diaphragm assembly. Replace O ring (OB106) and valve seat (SD101). It will be necessary to destroy the valve seat in order to remove it.

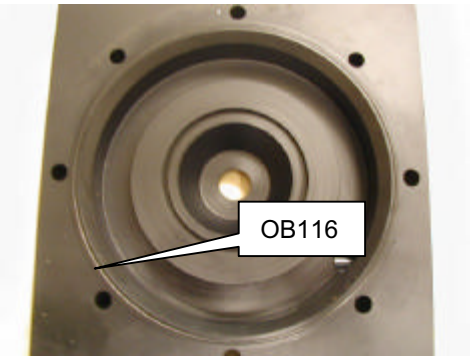

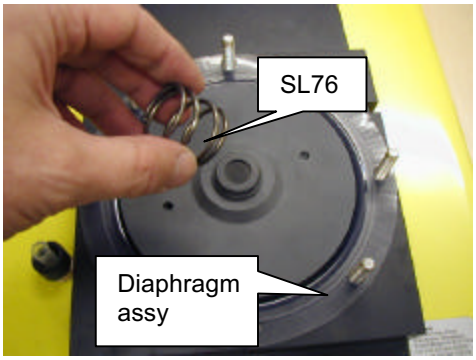

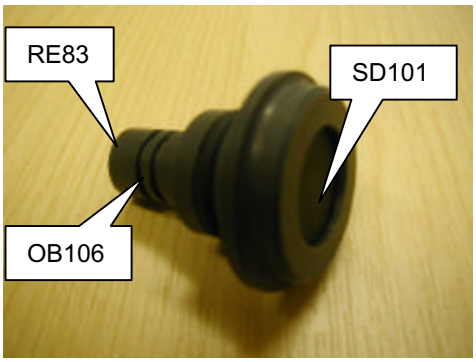

9. Using two special tools (TE65) unscrew the diaphragm ring (RB45) from the diaphragm plate (PF73). Replace diaphragm (DB38). Refit diaphragm ring and diaphragm plate together.

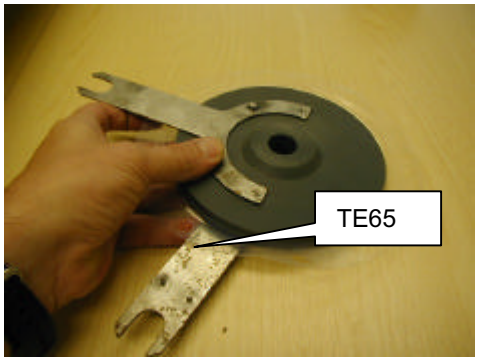

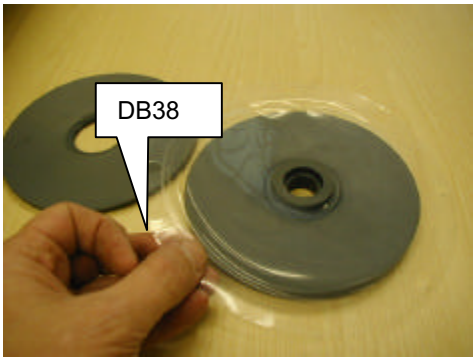

10. Refit retainer into centre of diaphragm assembly, ensuring it is fitted the correct way round. Re assemble the differential regulator in reverse order of dismantle.

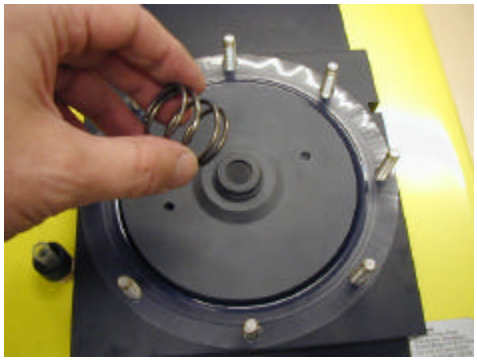
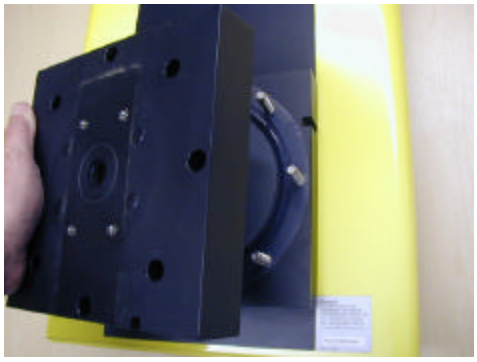

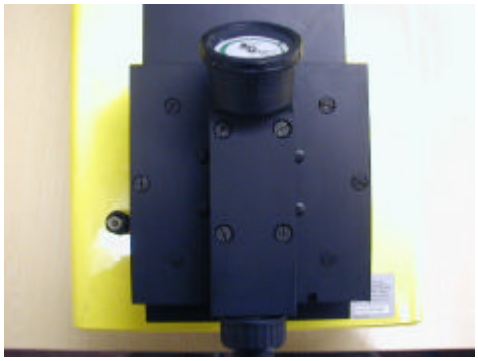

11. Undo the hose nut and remove the hose from the back of the lower meter block. Unscrew and remove the two bolts (SM128) securing the lower meter block. It will also be necessary to unscrew, but not remove the two bolts holding the vacuum alarm switch. Pull the lower meter block forward and then to the side until the unit is released from the vacuum alarm switch.

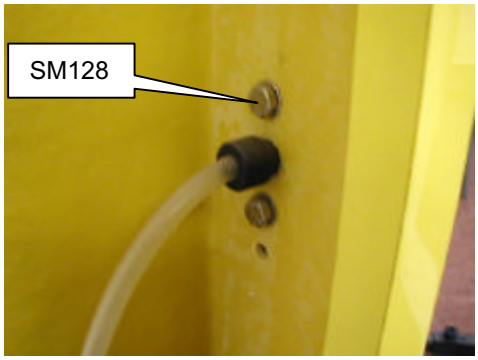

12. Pull the meter connector out of the lower meter block and replace O rings (OB103 and OB114). Replace the meter connector.

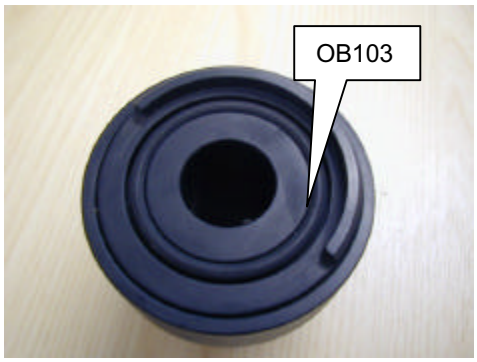

13. There is a connector that joins the vacuum alarm switch to the lower meter block, which will still be attached to one of the blocks. Pull the connector free and replace the O rings (OB115). Replace the connector.

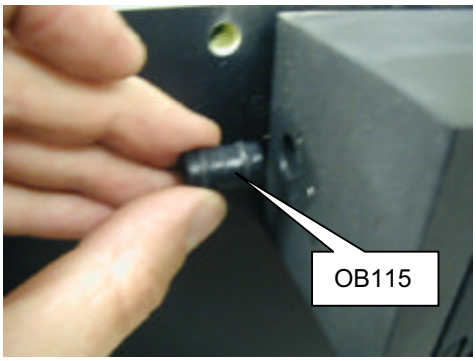

14. Replace the lower meter block and secure the bolts for the lower meter block and the vacuum alarm switch. Connect the hose to the back of the lower meter block.

15. Before dismantling the vacuum alarm switch, it is a good idea to mark the position of the front cap (CC133) in relation to the body (AAS986) using a marker, so that it can be re aligned correctly on assembly. Remove the two screws (SM129) and remove the cap (CC133).

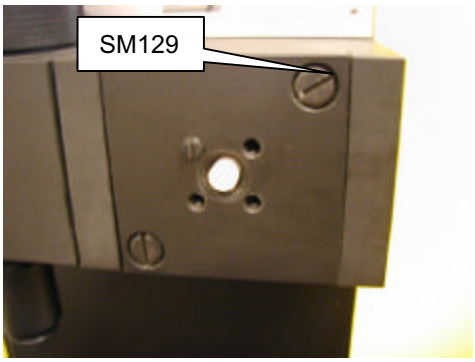

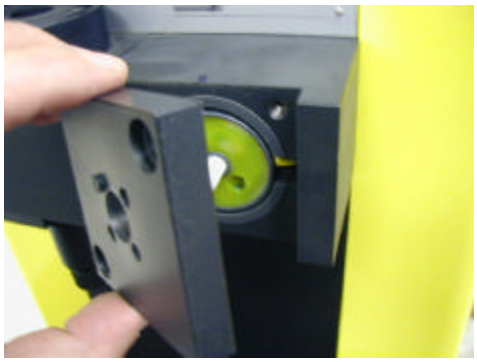

16. Loosen the cable gland (GD34) at the back of the doser, behind the vacuum alarm switch. Push the cable in towards the vacuum alarm switch and, at the same time, pull on the vacuum alarm switch in order to remove it from the body.

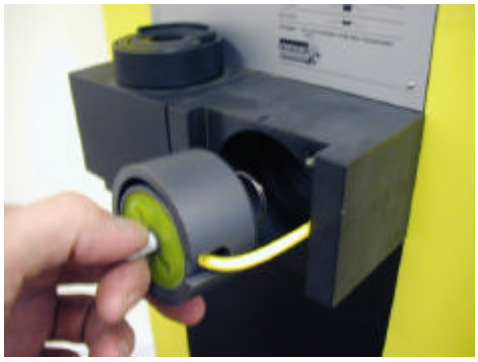
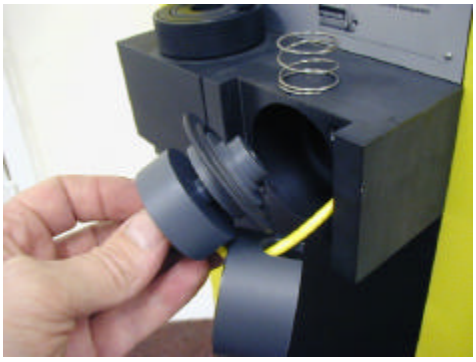

17. Unscrew the diaphragm assembly from the switch unit. Using tools (TE65 and TE66) separate the diaphragm bolt (SC62) from the diaphragm nut (NE126). Replace the diaphragm (DB36). Re assemble the vacuum alarm switch.

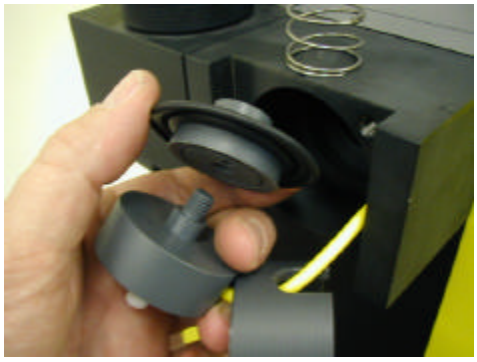

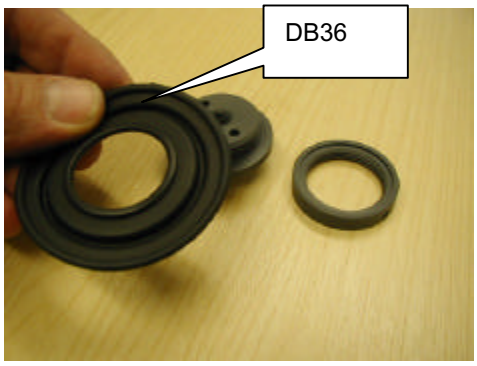

18. This section covers dosing units with vacuum relief valves and units without vacuum relief valves. If the doser has a vacuum relief valve fitted, follow steps 17 – 19. If no vacuum relief is fitted, go to step 20.

19. Unscrew and remove the four screws (SM130). Remove the vacuum relief cap (AAS679), complete with the diaphragm assembly.

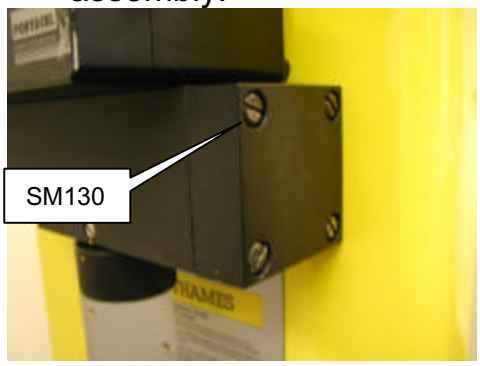

20. Remove the diaphragm assembly from the cap. Using tools (TE65 and TE66) separate the diaphragm assembly and replace the diaphragm (DB36).

21. Remove the spacer (SK97) from the cap. Replace the O ring (OB80) and the filter (FA41). Refit assembly, making sure that the diaphragm is the correct way round.

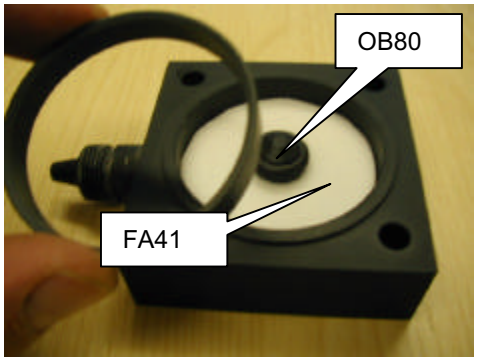

22. Remove the four screws (SM125) and remove cap (CC135). Replace O ring (OB58) and re assemble.

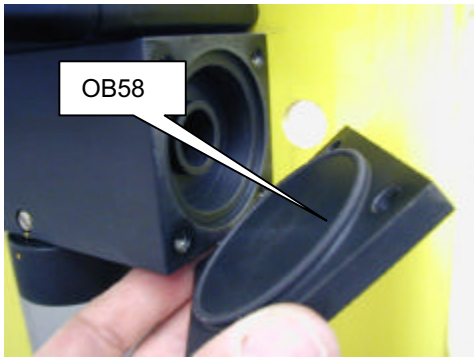

23. If dismantling of the control valve block is carried out in the following manner, when re assembled, the unit should not require re calibrating. With the valve fully closed, yellow dot on drive shaft lining up with yellow dot on body, the valve stem should be protruding from the end of the body by 1 – 2 mm.

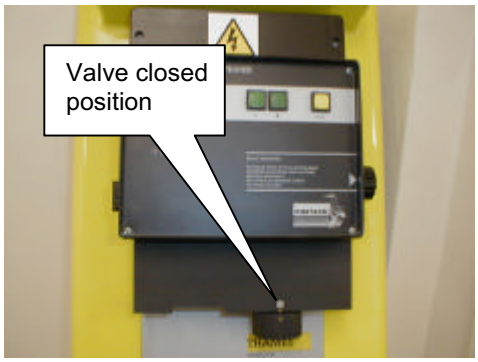

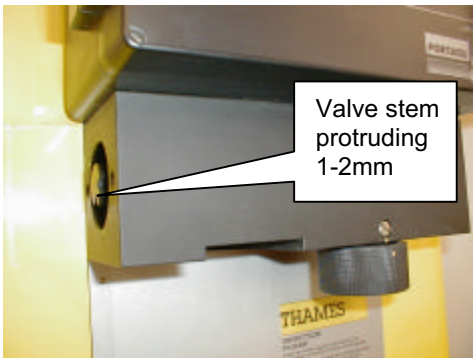

24. When the drive shaft is separated from the motor gearbox shaft, it is necessary to have all of the components in the valve closed position. Loosen the four screws on the door of the AVP and swing the door back on its hinges. There are two grub screws securing the drive shaft to the motor gearbox shaft. When the second grub screw is removed, the shafts should be in the valve closed position, so the valve should be opened in order to remove the grub screw furthest to the right first.

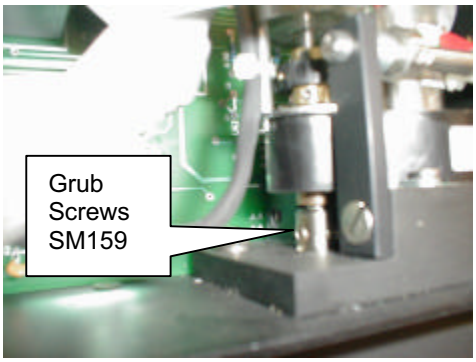

25. With the valve slightly open, remove the first grub screw. Close the valve fully and remove the second grub screw. Remove the shaft retaining screw (SC68).

26. Pull the drive shaft downward to remove it from the valve block. Replace O ring (OB89). Place drive shaft aside.

27. Hold on to the visible part of the valve stem and pull it from the valve block, complete with spacer (SK98) and orifice (OA30). Replace orifice (OA30) and O ring (OB106).
O RING (OB106) SHOULD NOT BE LUBRICATED.

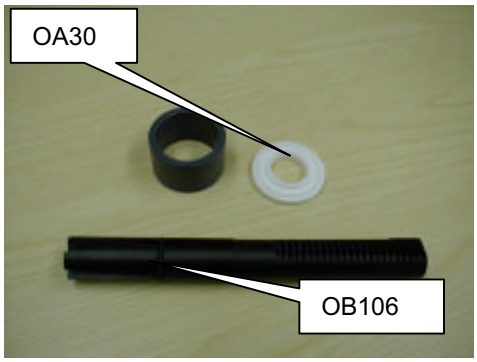

28. Replace O ring (OB133) inside the control block.

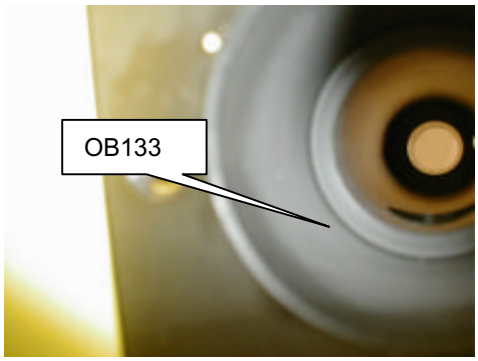

29. Remove ribbon cable and motor gearbox cable from circuit board. Remove clip and grub screw from clutch mechanism. Pull out clutch lever. Care should be taken not lose return spring.

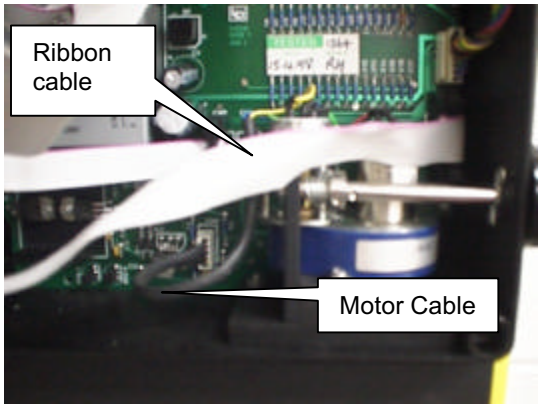

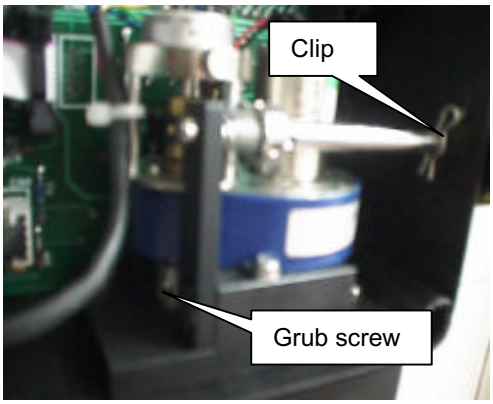

30. Replace O (OB15) on clutch lever shaft and put shaft to one side.

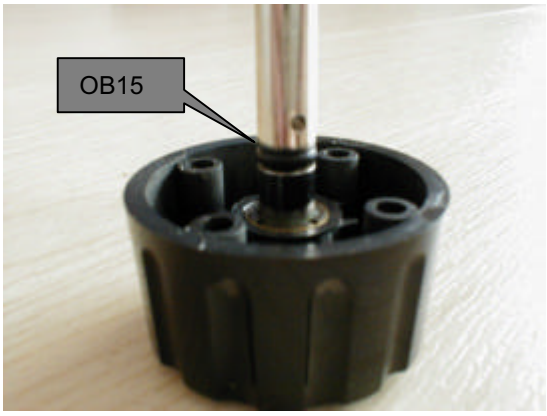

31. Remove two nuts (ND59) and lift motor gearbox assembly out of the AVP. DO NOT ALLOW THE MOTOR GEARBOX ASSEMBL TO TOUCH THE CIRCUIT BOARD BEHIND IT DURING REMOVAL.

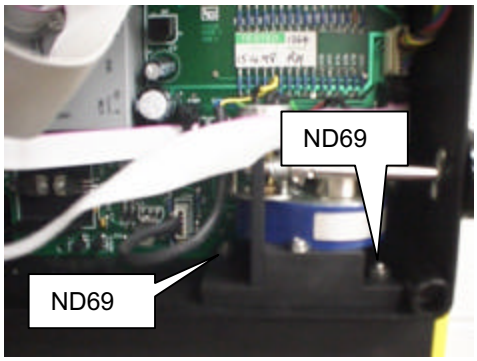

32. Replace O rings (2 x OB142, 4 x OB126, 1 x OB141 and 1 x OB109).

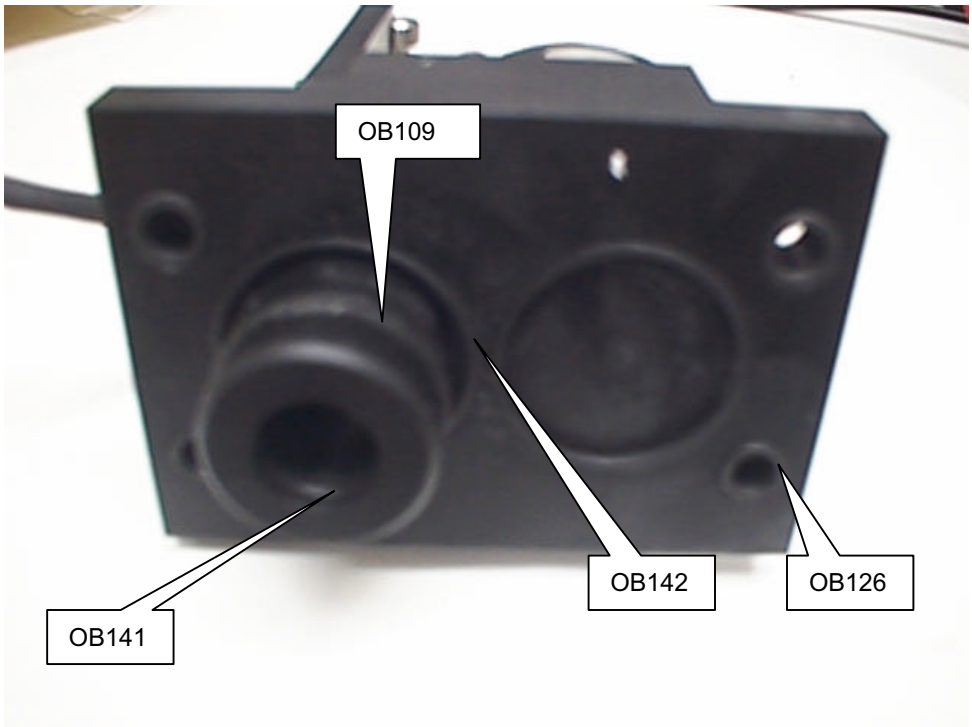

33. Refit the motor gearbox assembly and the clutch lever assembly in reverse order of removal.

34. Insert the valve stem, complete with orifice (OA30), into the control block, making sure that the teeth on the valve stem are facing the front of the block. Push valve stem into the block until approximately 1 – 2mm of the stem is protruding the end of the block.

35. Insert the drive shaft into the block, ensuring that when the teeth of the drive shaft engage with the teeth of the valve stem, the yellow dot on the drive shaft is in line with the yellow dot on the valve block. Push in as far as is possible. Insert the first grub screw and tighten so that the drive shaft cannot move without the motor shaft.

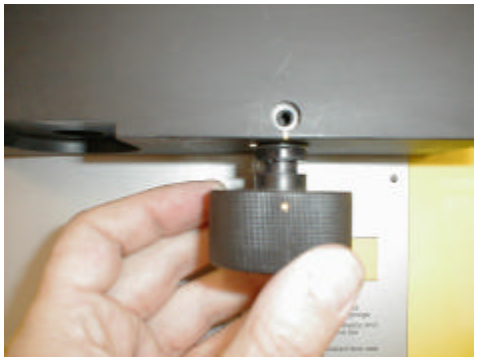

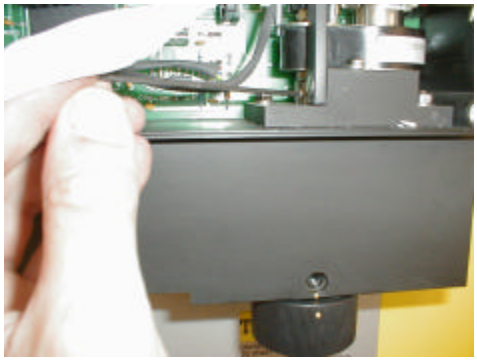

36. When the first grub screw is tight, disengage the clutch and turn the drive shaft to gain access to the second grub screw hole. Fit second grub screw.

37. Refit spacer (SK98) into end of valve block. Refit bypass pipe assembly and secure with bolts, top and bottom. Refit meter tube in position and secure by tightening meter connector on lower meter block. Refit meter tube cover and secure with screws.

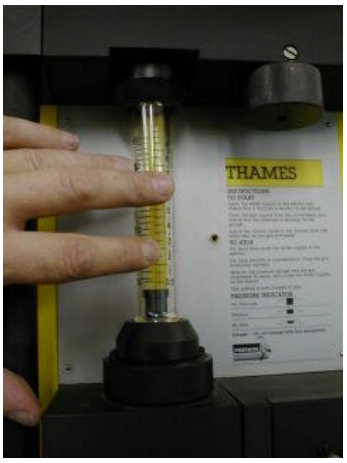

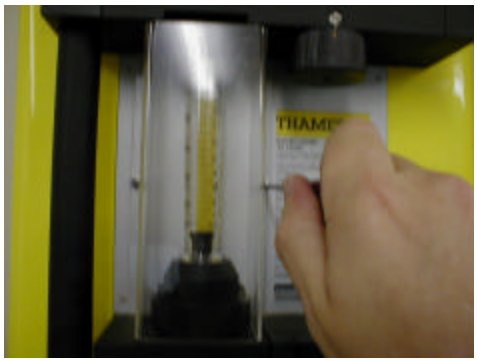

Medway 2

Residual Analyser

The Medway 2 Analyser is used to indicate the amount of residual chlorine in water. It is installed downstream of a dosing system and by utilisation of the retransmisson signal can be used to monitor or control the dosing equip-ment. It is designed to control the potential event of either dangerous underdosing or wasteful overdosing of chlorine. The monitor is equipped with four manually adjustable alarms and one equipment failure alarm.
The Portacel Buffer system should be used with the Medway 2 for certain oper-ating conditions.

- Low sample flow rate – 0.2 l/min
- Rapid response gives precision chlorine dosage control
- Automatic zero facility
- RFI/EMC tested
- RS 232 communication port
- Unique security systems – password protected
- Self-cleaning measuring cell

PORTACEL

AN ISO 9001 ACCREDITED COMPANY

Medway 2

HOW IT WORKS

A sample of treated water flows through the residual chlorine amperometric measurement cell. This cell has two electrodes, one gold the other copper, the galvanic response generates an electric current proportional to the concentration of chlorine in the water.

Available free or total chlorine residual can be measured by injecting reagents into the system. The chlorine residual measurement cell is temperature compensated and is also pressure and flow regulated. The Medway 2 system operates within very precise limits, measuring any change in the residual chlorine within seconds of the sample entering the measurement cell.

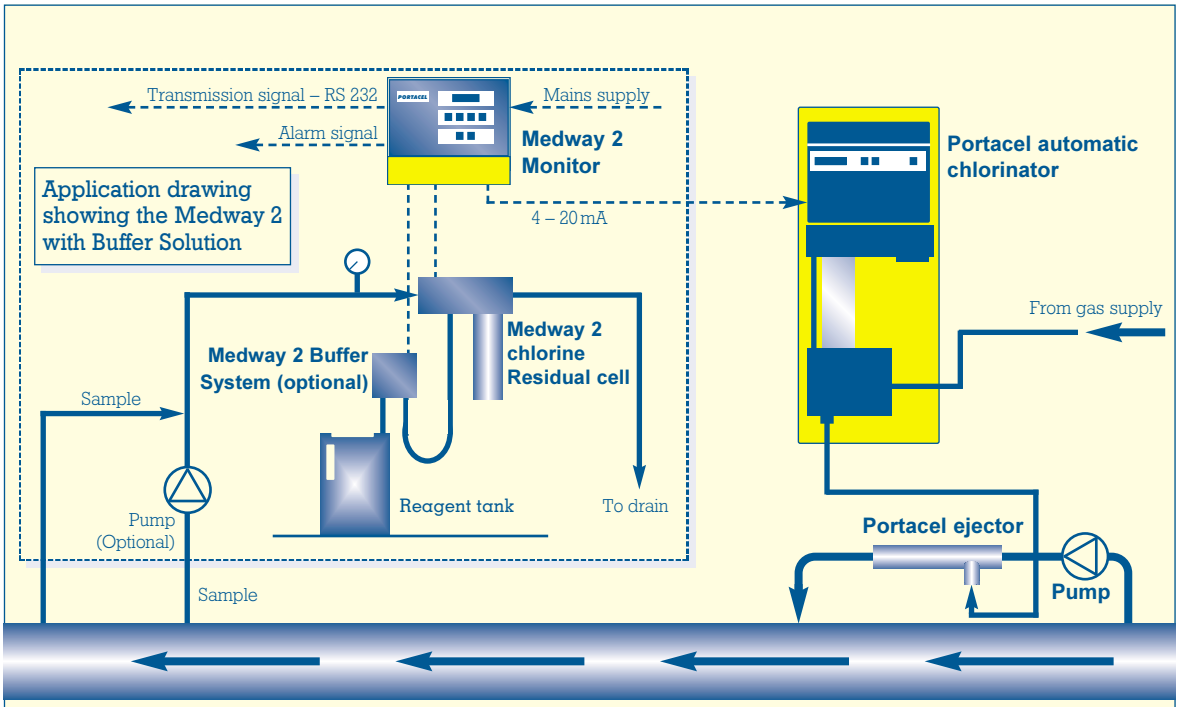

Fig. 1

Triple Validation

The Kennet Triple Validation Monitoring System (TVM) further enhances the performance and reliability of the Medway 2 analyser.

Three Medway 2 systems, analysing a single water sample point, are connected to a Kennet Monitor. The Kennet verifies the Medway outputs and provides a single validated output for re-transmission, non valid signals are ignored and an alarm activated.

Product Dimensions

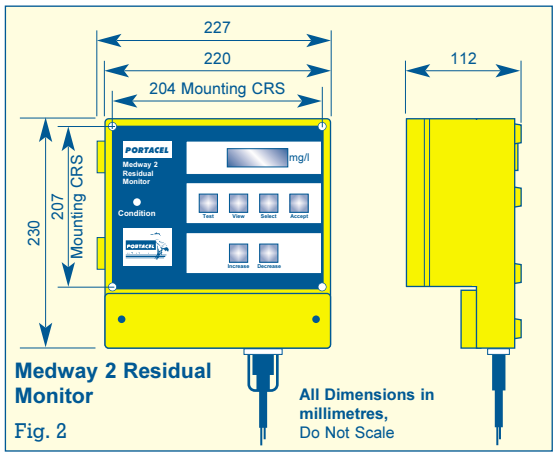

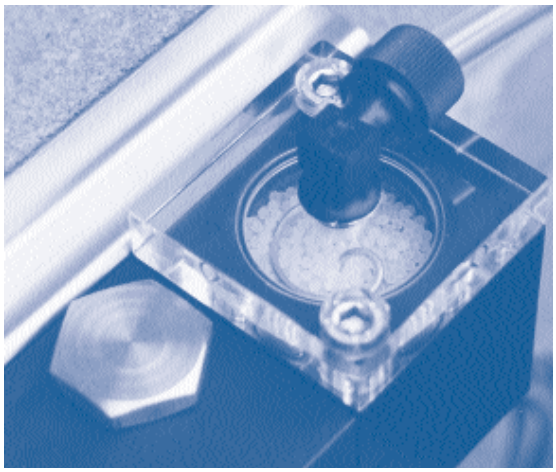

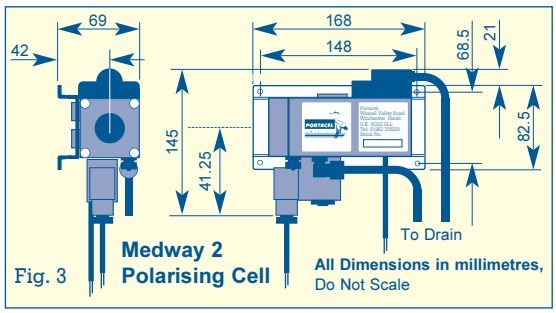

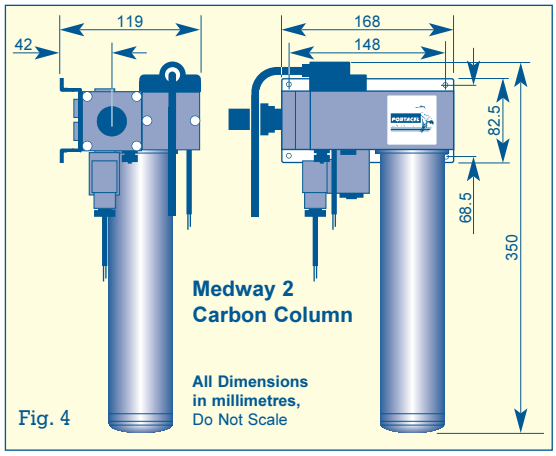

General Specification

The Medway 2 monitoring system consists of a measuring cell and a wall or panel mounted monitor. A sample of treated water is taken from the main downstream of the chlorine dosing point and is passed through the cell. The resultant signal from the cell is sent to the monitor which displays the reading on a four digit read out as mg/l of chlorine.

The Medway 2 measuring cell has a unique flow control regulator. This ensures that the flow through the cell is constant, giving accurate readings of chlorine residual. The low sample flow rate of 0.2 l/min makes the Medway 2 an economic means of on line chlorine residual measurement.

Options such as input and output ranges, communications set up and alarm levels can be programmed to suit operating requirements.

The measuring cell can be 'zeroed' to establish a zero datum equivalent to zero chlorine in the cell. The monitor can be set to automatically zero the analyser at predetermined intervals, so offering greater accuracy during operation.

There are two options for zeroing the chlorine cell:

1. Polarising Cell, (fig. 3). The cell is fitted with a solenoid valve, which, when activated, shuts off the sample supply. This polarises the electrodes permitting the signal to decay to zero, so providing a zero datum.
2. Carbon Column, (fig. 4). The cell is fitted with a solenoid valve which, when activated, diverts the sample water through an integral Carbon Column before it enters the cell. The chlorine within the sample is removed on contact with the carbon. The sample then passes through the measuring cell providing a true zero reading.

Medway 2 Buffer

HOW IT WORKS

Residual chlorine in treated water has two major components, hypochlorous acid (HOCl) and hypochlorite ions (OCl). The quantity of each component in the sample is dependant upon the pH value of the water, the component of interest is the content of HOCl. At a pH of between 4 – 5 the free chlorine is nearly 100% HOCl, whereas at a pH level of 10 – 11 the free chlorine is nearly 100% OCl.

It is recommended that a buffer system is used when the water sample needs to be stabilised. This enables the monitor to accurately measure the HOCl content at a lower pH level and ensures repeatable accuracy.

The Medway 2 buffer system can use either phosphate or acetic acid solutions. To measure total chlorine, potassium iodide can be added to the buffer solution. The Medway 2 also has the option

Dissociation Curve

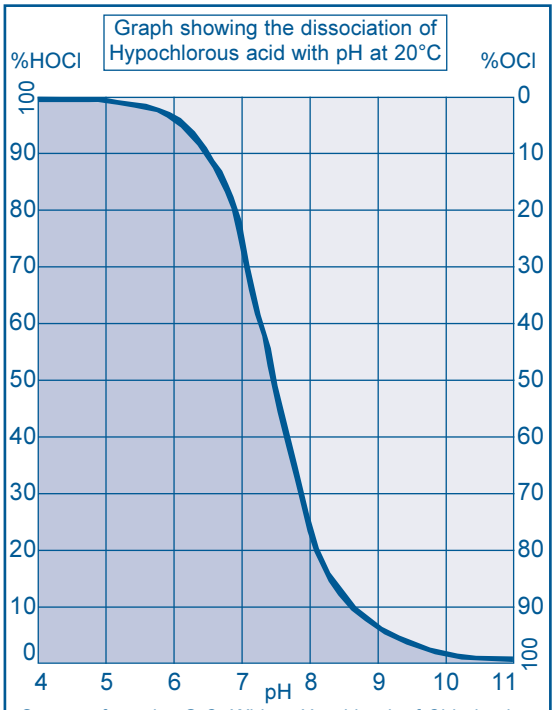

Source of graph - G.C. White - Hand book of Chlorination

Further Information

For further information concerning the Portacel Medway 2, Medway Buffer System or any of the other products offered by Portacel please contact the Portacel sales office.

Medway Buffer System Technical Data

Capacity	0.7ml/min
Overall Dimensions	85 mm deep x 130 mm wide x 140 mm high
Weight	1.0 kg approx.
Service Requirements	24 v AC 50/60 Hz (supplied from the Medway 2)
Operating Temperature	0 – 50°C
Ambient Temperature	0 – 50°C
Pressure Rating	0.5 Bar
Connections	Electrical: Via analyser
	Buffer: Hose to cell and buffer storage tank
Enclosure Protection	IP 535
Colour	Black with acrylic lid
Displays (Meter/Gauge)	Green LED and drip indicator
Optional Extras	Buffer container low level switch
	25 litre Polythene container (approx. 1 month supply)
	Filter

Medway 2 Buffer

Buffer System

The Medway 2 Buffer System is available for installations where either the pH of the water sample needs to be lowered or where measurement of combined or total chlorine residual is required.
The buffer system consists of a pre-cision peristaltic pump and a portable container for the buffer solution. The buffer solution is accurately dosed directly into the measuring cell.

- Long life tube element
- Low maintenance
- Increased accuracy and stability
- Drip rate indicator
- 24v AC operation (from the Medway 2)
- Peristaltic pump

Product Dimensions

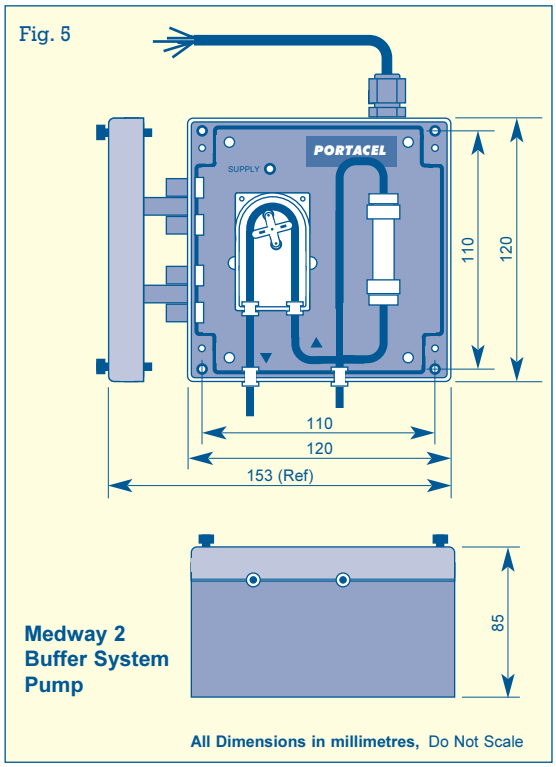

PORTACEL

Medway 2 Technical Data (Transmitter Specification)

Range	0.5 mg/l up to 20 mg/l in 6 programmable ranges
Accuracy	+/– 1% at full scale deflection
Overall Dimensions	220 mm wide x 230 mm high x 115 mm deep
Weight	2 kg
Service Requirements	Power Supply: 110/230 v (+/–10%) 50/60 Hz (+/–5%) or 24 v DC lamp
Ambient Temperature	0 – 50°C
Connections	4 – 20 or 0 – 10 mA isolated, RS 232 two-way communications, mains socket
Enclosure Protection	IP 54
Colour	Yellow BS 4800 10 E 53
Approvals (International)	IEC 801 Pt 3 and 4. BS EN 50082 Pt 1
Power Consumption	30 Watts Max
Alarms	4 x process, 1 x equipment
Displays (Meter/Gauge)	4 digit LCD
Resolution	0.01 mg/l
Sample Hold Feature	During calibration zeroing or while viewing data
Security	Unique code number prevents unauthorised tampering with setting but view menu permits random viewing of sorted data

Medway 2 Technical Data (Cell Specification)

Zero Facilities	2 way diverter valve for depolarising water sample or carbon column for dechlorinating water sample
Range	0 – 20 mg/l free or total residual chlorine
Reagent (When Specified)	Acid buffer is used for pH correction when measuring free chlorine
	Acid buffer and potassium iodide mixed solution is used for measuring total and combined chlorine
Reagent Tank	25 litre transportable container (30 days usage)
Sample Water	0.2 l/min clean water at 1.0 bar to 5.0 bar at cell
Sample Water Connection	½" BSP tapping with 0.5 mm particle screen
Drain connection	8 mm O/D plastic compression coupling, free discharge
Working Temperature	(sample) 3 – 35°C
Accuracy	0 – 2 mg/l: +/– 0.05 mg/l at full scale deflection
	0 – 10 mg/l: +/– 0.5 mg/l at full scale deflection
	0 – 20 mg/l: +/– 1.0 mg/l at full scale deflection
Weight	Polarising cell – 0.75 kg
	Dechlorinating cell – 2.5 kg

Portacel
Winnall Valley Road
Winchester, Hampshire
United Kingdom, SO23 0LL
Tel: +44(0)1962 705200
Fax: +44(0)1962 705279
A part of T M Products

PORTACEL
DISINFECTION SYSTEMS

We reserve the right to change the design and specification without notice. © T M Products Limited. Port DS. 003. 5k. 10.97

Medway 2 – De Chlorinating
Method of Service Statement

The transmitter section of the Medway 2 analyser is maintenance free, but the cell assembly and the buffer pump should be periodically serviced.

In order to service a Medway 2 carbon column analyser cell an AAS1182 service kit is required. The service kit comprises of the following components:

Part No.	Description	Quantity
FA33	Filter	1
OB2	O Ring	4
OB16	O Ring	1
OB93	O Ring	1
OB95	O Ring	2
OB96	O Ring	1
OB118	O Ring	2
TF37	Tubing	1.5m
WA60	Washer	2

All O rings should be lightly lubricated using chlouroflourocarbon grease.

1. Electrically isolate the Medway 2 analyser. Isolate the sample inlet supply and disconnect the inlet pipe at a convenient point. Disconnect the drain hose from the top of the analyser cell.

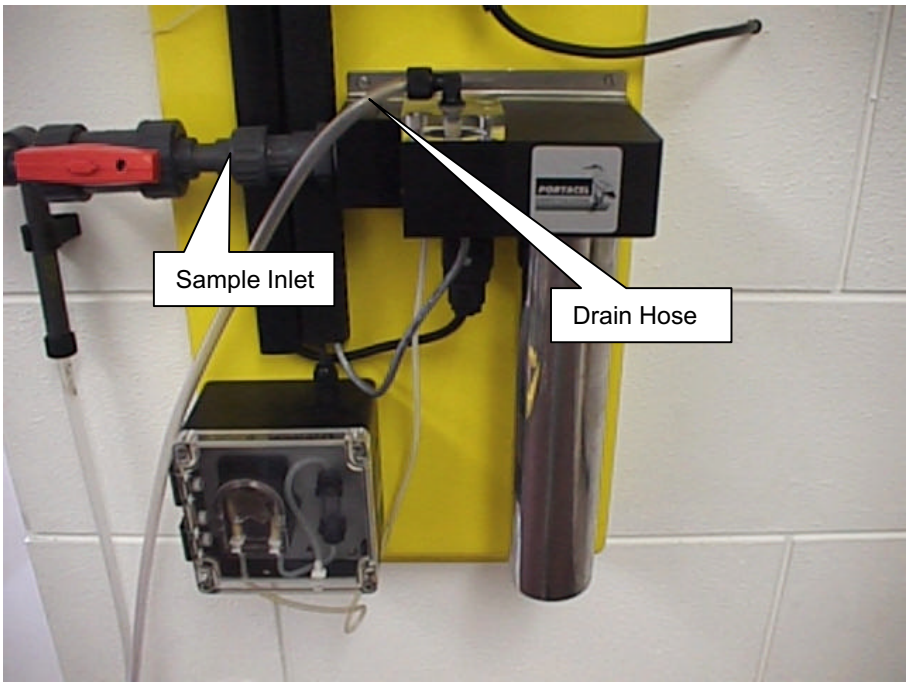

Disconnect the buffer feed hose by unscrewing the nut from the buffer feed nipple. Undo the retaining screw and remove the solenoid electrical connector block.

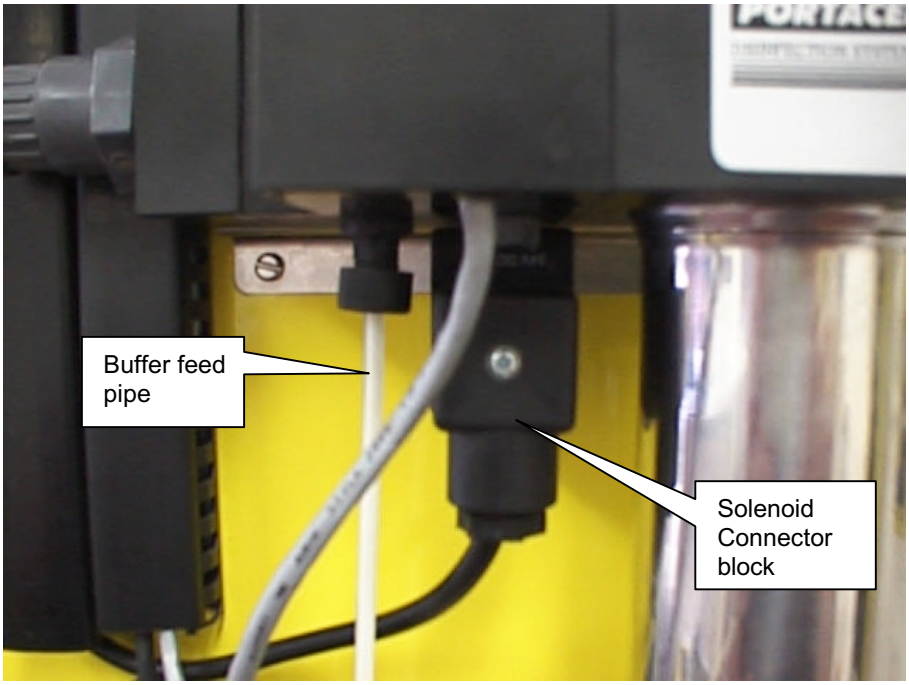

2. The cable into the analyser cell is not detachable so it is necessary to remove the cell from the assembly before complete removal of the assembly is possible. This is done by removing the two bolts securing the cell to the carbon column block and placing the cell to one side.

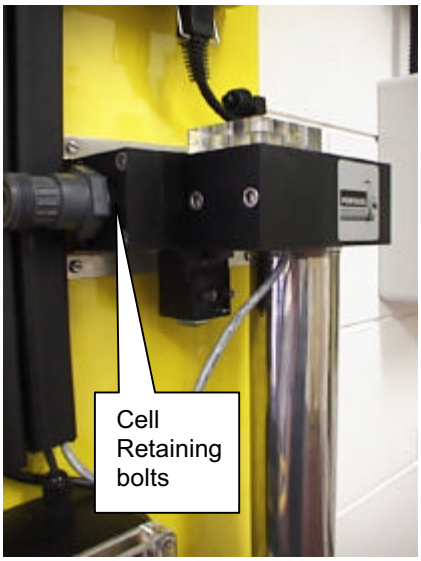

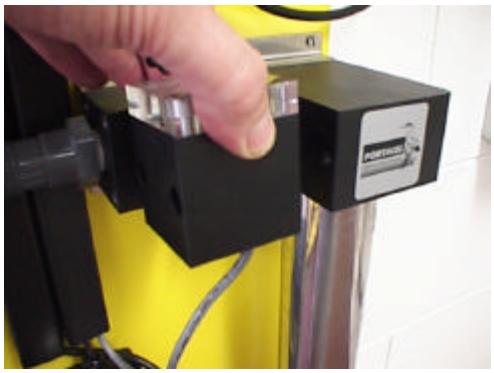

3. Unscrew and remove the carbon column housing. Unscrew and remove the carbon column module. Care should be taken not to apply too much pressure on the carbon column as it is possible to break the PVC thread off inside the block.

4. Unscrew and remove the four cell assembly retaining screws and remove the assembly from the panel to a more convenient work surface.

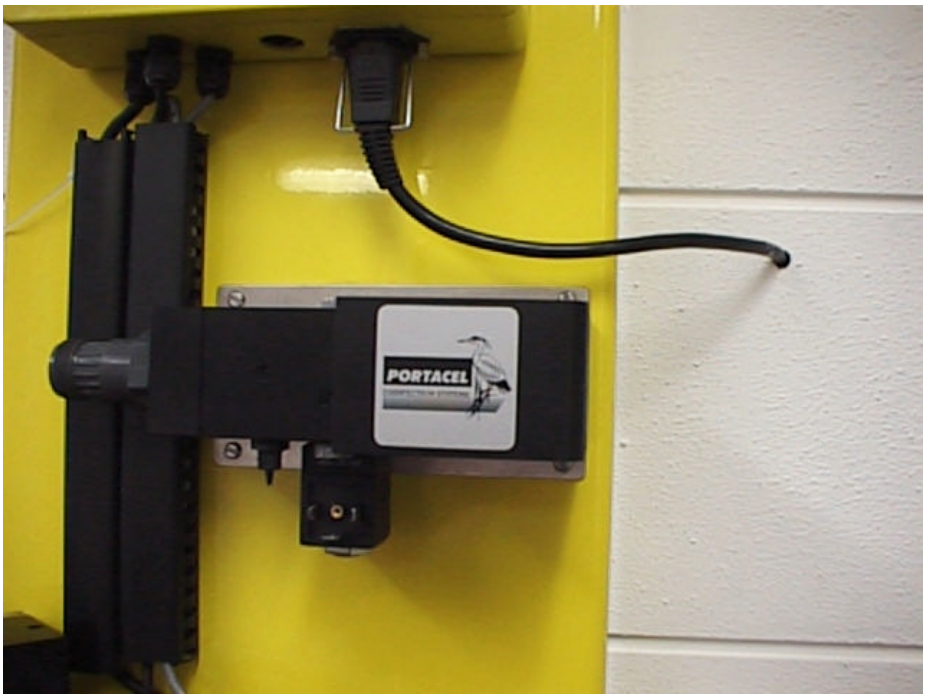

5. Remove the solenoid retaining nut and remove the solenoid. Unscrew and remove the solenoid core, taking care not to lose the spring. Replace O ring (OB95). Place solenoid core to one side.

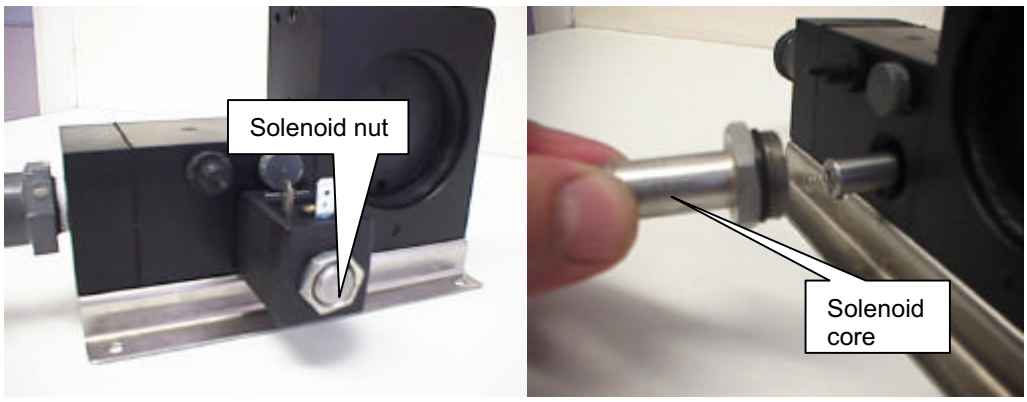

6. On the top of the assembly, unscrew and remove the solenoid plug. Replace the O ring (OB95). Place plug to one side.

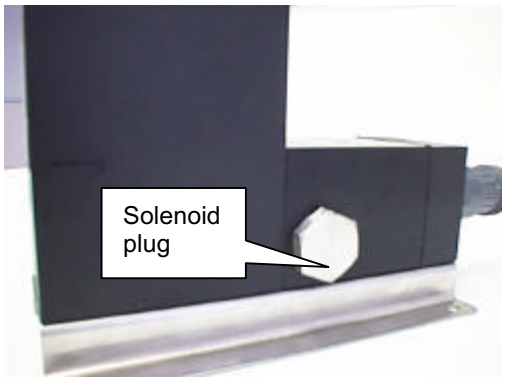

7. Holding a screwdriver in the slot in the top of the valve screw, unscrew the armature, by hand. When the armature has been removed, the valve screw can be pulled from the top and removed from the unit. Discard the two washers.

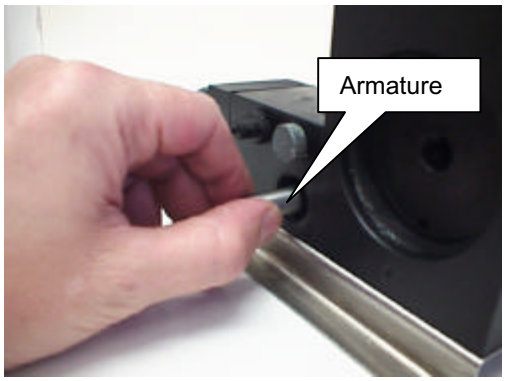

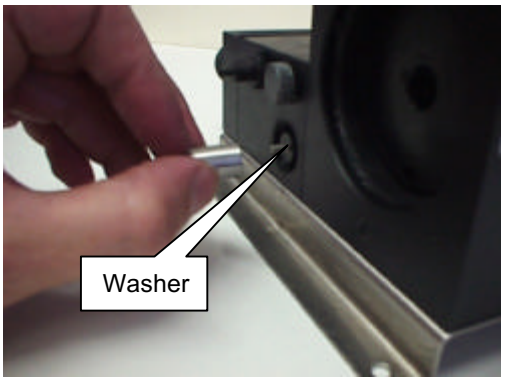

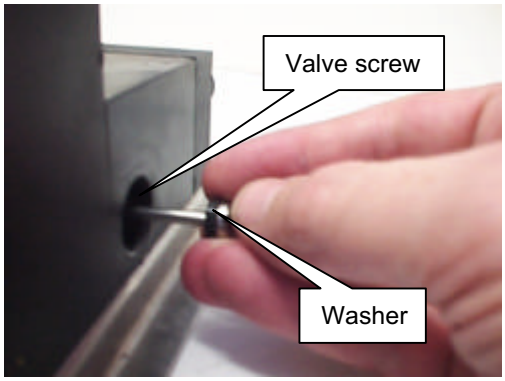

8. Unscrew and remove the buffer nipple and plug. Replace O rings (OB118). Place all parts aside.

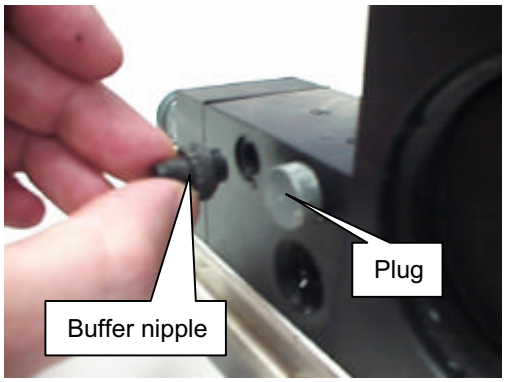

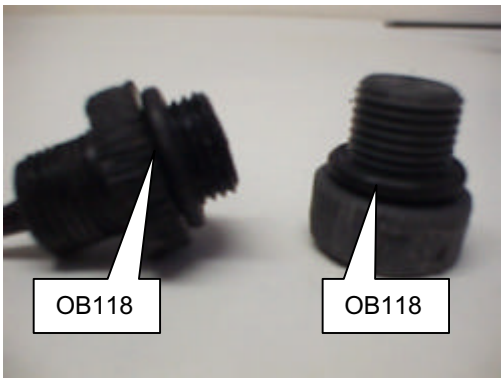

9. Remove the inlet pipe from the inlet cap (CC107). Remove the four screws (SM119) and remove the inlet cap.

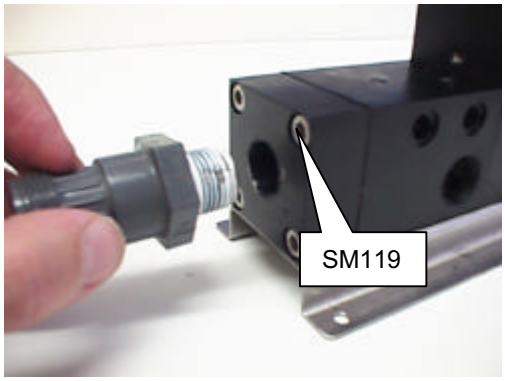

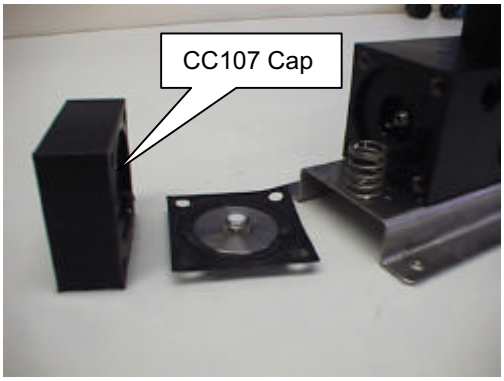

10. Replace the filter (FA32) and O ring (OB16) in the inlet cap (CC107). Place to one side.

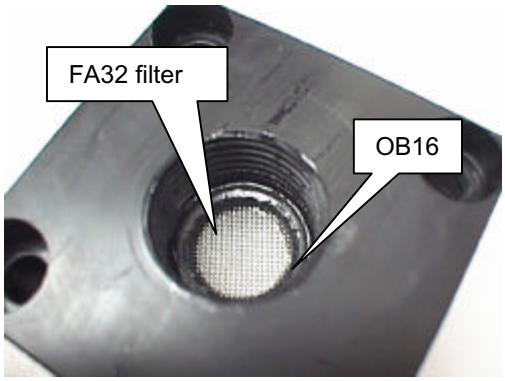

11. Examine both sides of the flow control diaphragm assembly (AAS624) for any damage. Replace if necessary. Check that the 0.9mm hole in the centre is free from any obstruction.

12. Remove the two screws (SM141), securing the carbon column housing to the solenoid body. Remove the bolt (SM121), securing the carbon column housing to the mounting bracket. Remove and clean the carbon column housing and replace the two O rings (OB2). Place carbon column housing to one side.

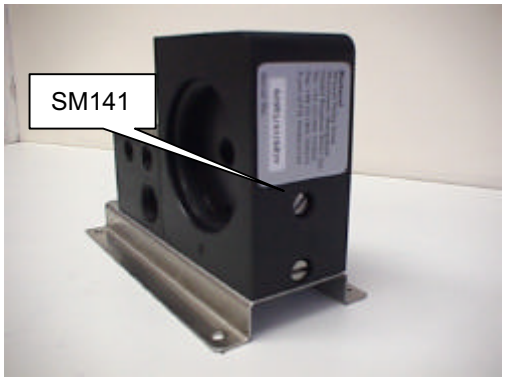

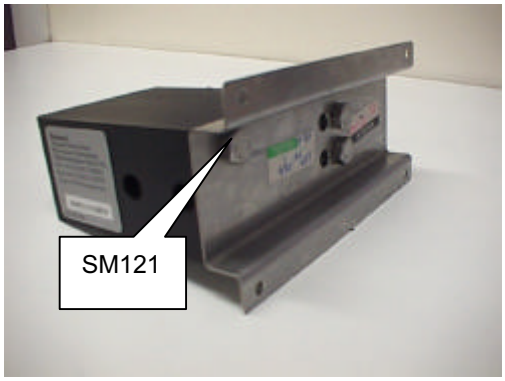

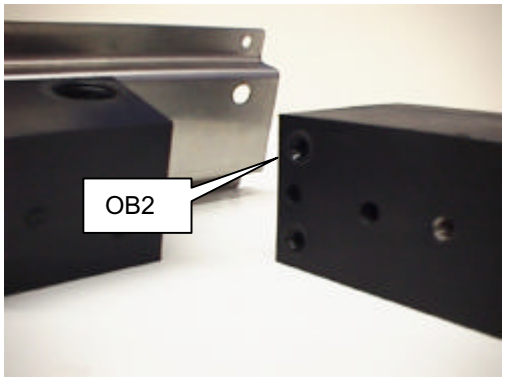

13. The body can be left secured to the mounting bracket, but should be thoroughly cleaned and then inspected for excessive wear or damage and replaced if necessary.

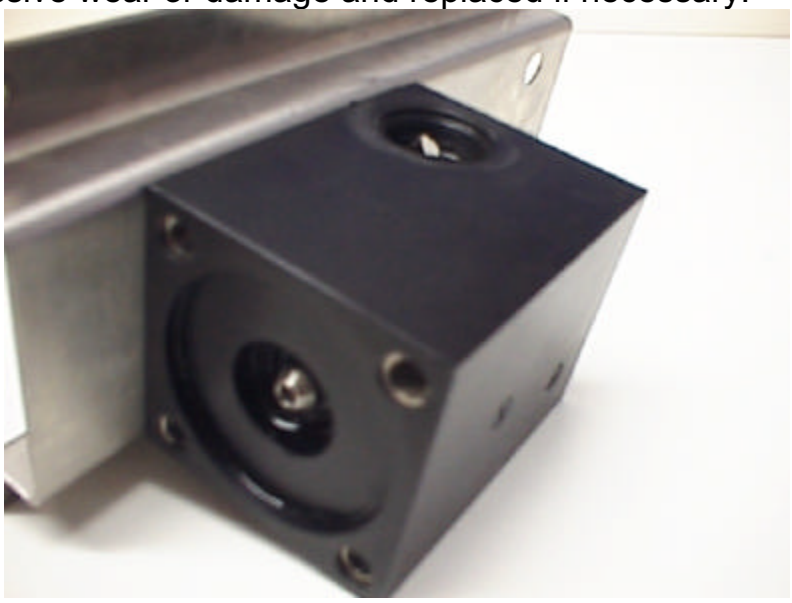

14. The carbon column housing can now be replaced onto the mounting bracket, being secured to the mounting bracket by a bolt and to the body by two screws. The two screws and the bolt will need to be fitted before any of them are tightened or problems may be experienced in lining up the holes.

15. Insert the four screws (SM119) into the flow control cap. Place the diaphragm assembly onto the four screws, ensuring correct orientation with the hole in the centre of the diaphragm facing the cap. Holding the spring in position over the valve seat in the body, secure the cap and diaphragm assembly to the body and tighten the screws. Assembly of this part should be done in this fashion to avoid possible damage to the diaphragm when securing the cap to the body.

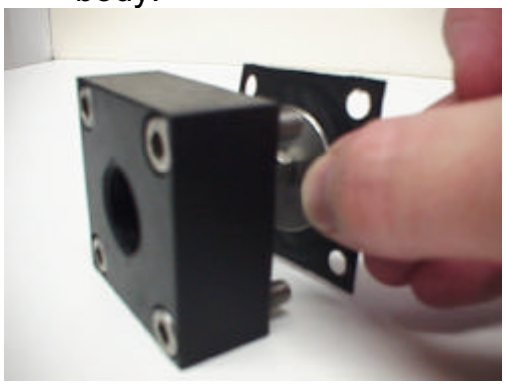

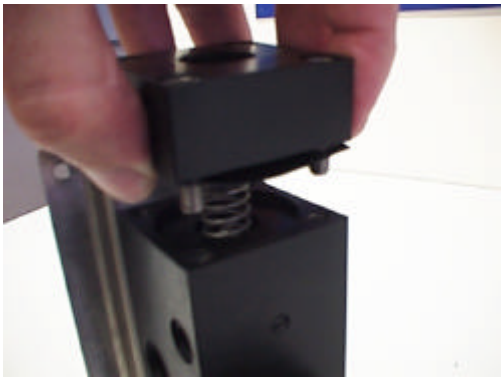

16. Place a new washer (WA60) onto the valve screw (SC60) and insert the valve screw into the top of the body. Holding the valve screw in place, fit a new washer (WA60) to the valve screw from the bottom of the body. Screw the armature (FB767) onto the valve screw. This need only be hand tight.

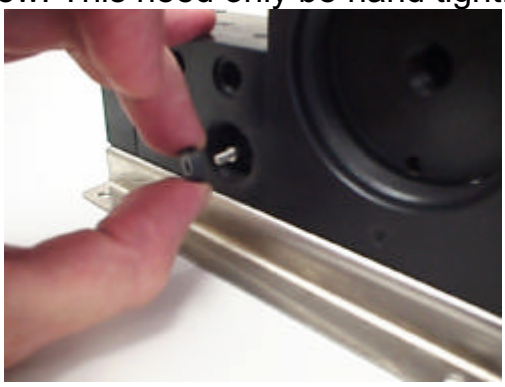

17. Insert the spring (SL73) into the hole in the armature and then fit the solenoid core over the armature and tighten into place. The solenoid assembly can now be tested by pressing down on the top of the valve screw and making sure that it springs back when released. The plug (PL40) can now be fitted and tightenede down.

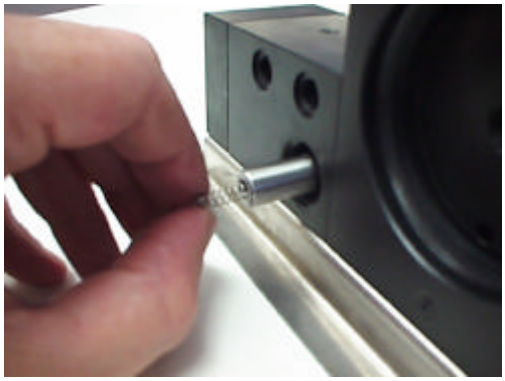
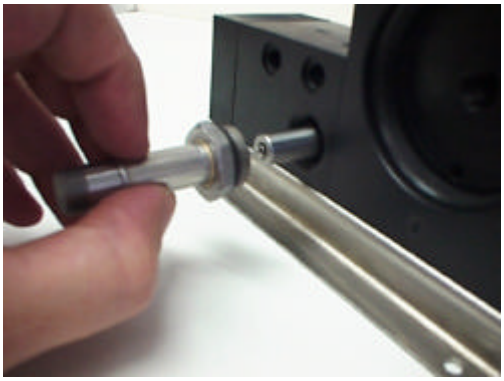

18. replace the buffer nipple (AAS760) and the plug (PL45), remembering that the buffer nipple fits into the hole nearest to the flow control cap.

19. Refit solenoid over solenoid core and secure with bottom nut. Refit inlet pipe into flow control cap taking care not to screw inlet pipe too far into cap which can cause damage.

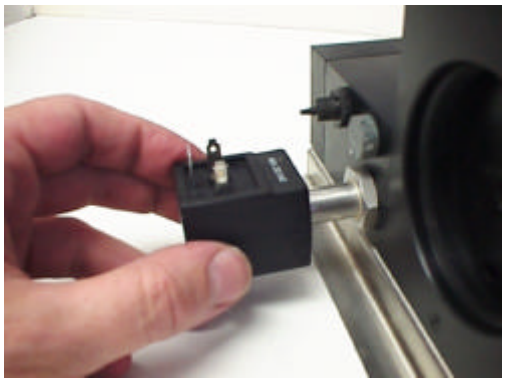
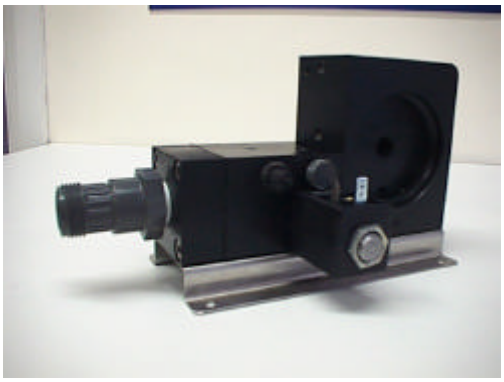

20. On the cell assembly, remove the two screws (SM123) and lift off the cap (CC106). Care should be taken not to lose any of the glass beads inside the cell assembly. Replace the O ring (OB93) on the cap. Inspect the cell for any excessive wear or damage and replace if necessary.

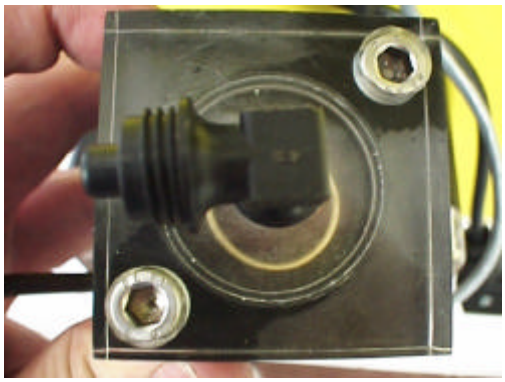
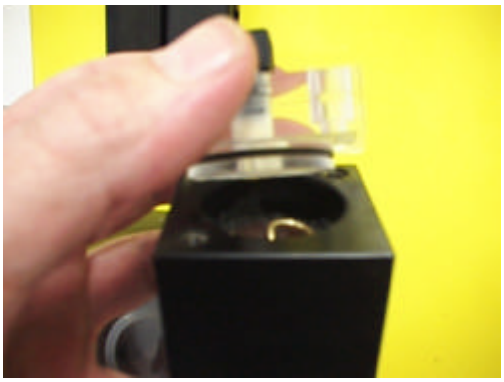
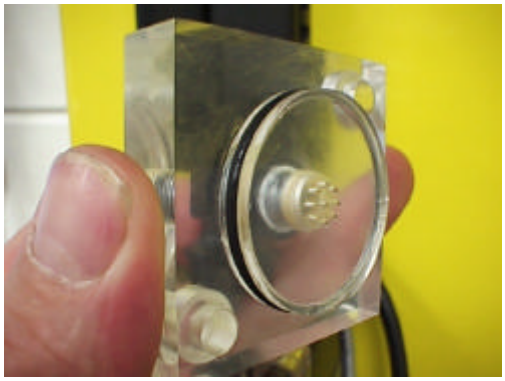
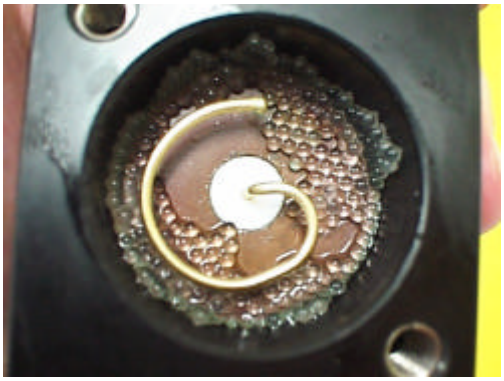

21. The cap (CC106) can now be replaced onto the cell and secured with the two screws (SM123). Note correct orientation of the cap so that the drain elbow points in the right direction.

22. Refit the cell assembly to the panel using the four retaining screws. Refit the cell to the carbon column housing using the two screws (SM120) after replacing the two O rings (OB2).

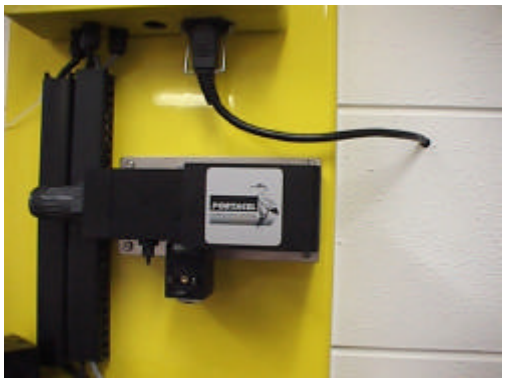

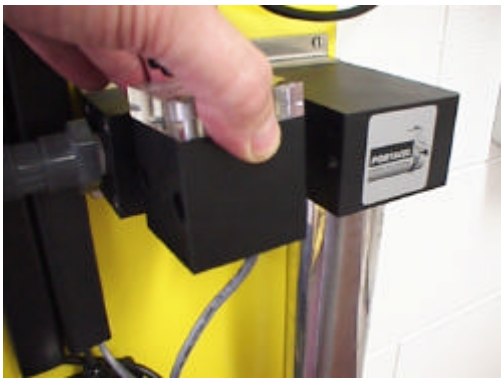

23. Refit the carbon column and the filter body, taking care not to over tighten the carbon column.

24. Reconnect the solenoid connector block and the buffer feed pipe. Replace the drain hose (TF37) and reconnect the sample inlet pipework.

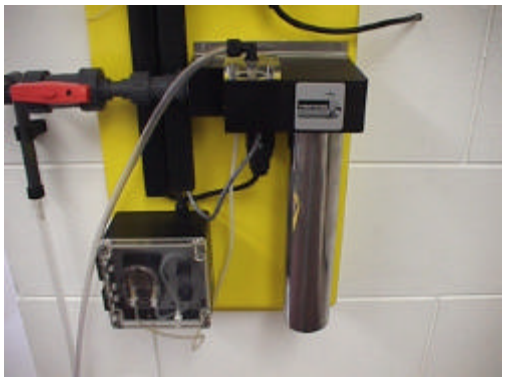

25. Turn on the sample water and the buffer pump and allow to settle for 30mins to 1 hour before calibrating the unit.

Colne

Gas Monitoring Systems

The Colne range of systems is designed for permanent installation wherever there is the need to monitor the environment for toxic gases.
The control units are compact and are designed for unobtrusive wall mounting in any convenient position. Installation, commissioning and maintenance are simplified by the modular design of the electronics.

- Electro Chemical Sensors
- Suitable when a number of self-contained monitoring systems are needed
- Meets the requirements of BS 6020
- Durable components
- Low maintenance
- Provides both local and remote alarms
- Can be configured with different combinations of toxic gas sensors
- Compact design

PORTACEL

Colne

HOW IT WORKS

The Colne system has been developed with the Control of Substances Hazardous to Health (COSHH) regulations in mind and to meet the requirements of BS6020.

The system comprises a control unit and selectable number of remote gas sensing heads. Two control units are available.

For monitoring a single toxic risk in a small area, the Colne 1 is suitable. When a greater number of sensors are needed, including combinations of different gas sensors, the Colne 4 can be utilised.

Colne systems are designed for a reliable long life and once installed require only routine calibration of the sensor heads.

Clear indication of gas levels is given by a red LED display which provides the reading from each detector in turn, monitoring is carried out every 5 seconds. Each channel's reading can also be manually selected. Channel identification is given by a green LED display. In the event of a detector sensing gas at a concentration higher than the alarm set point, the red LED display remains at the maximum level and flashes.

Fig. 1

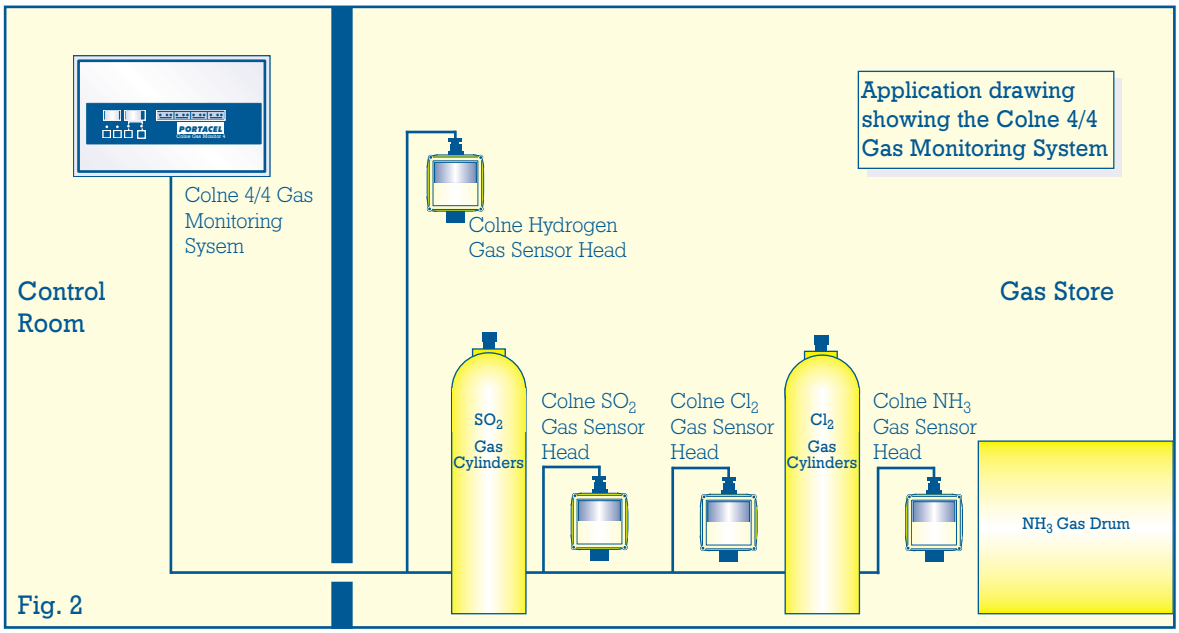

Fig. 2

General Specification

The cabinets shall be painted mild steel, water and dust resistant to IP54, with lockable door. A transparent window allows displays and indicators to be clearly seen. An optional cabinet IP66 is also available for external mounting. For installation of the control unit in a hazardous area, a flameproof enclosure is available.

Each gas channel has two user-adjustable alarm levels which can be set to operate from signals received from the remote detecting heads. Triggering of an alarm is indicated by a red LED and operation of the internal audible warning.

The audible alarm can be cancelled by operating the 'Reset/Accept' push control but visual alarms cannot be cancelled until the detectors are gas free and the system is reset.

Each gas channel module has a 'write-on' pad to enable the installer to identify the location of the detectors and to record calibration and alarm levels.

The mains 'power on' indication is by green LED which flashes in the event of a main power failure. Confirmation that the battery is being charged during normal operation is given by a separate green LED. All indicators and the displays are tested by means of a 'Test' push button.

Portacel gas detection systems are integrally fitted with volt free relays to control other equipment including ventilation systems, automatic doors, valves etc. Each system, therefore, has common low alarm, high alarm and fault relays which are double pole changeover, rated 5 amp at 240v AC and, in addition, each channel has its own double-pole changeover 240v AC 5 amp relays for low alarm and high alarm. All relays can be operated in normally energised 'fail-safe' mode or in normally de-energised mode.

An output to drive one or two audible/visual alarms is also provided which does not use any of the relay contacts.

For interfacing the Colne with computers, recorders, telemetry, etc, outputs are provided to give 1-5v or 4-20 mA for each channel (user adjustable). 6AH or 15AH batteries are available as optional standby power sources.

Product Dimensions

Fig. 3

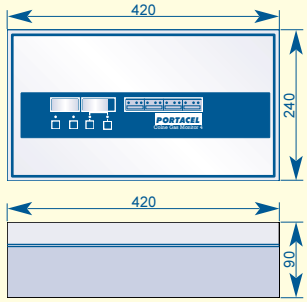

Colne 4 Gas Monitoring System
All Dimensions in millimetres. Do Not Scale

Fig. 4

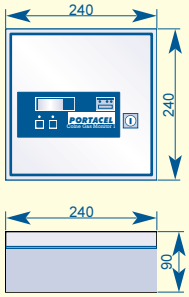

Colne 1 Gas Monitoring System
All Dimensions in millimetres. Do Not Scale

Fig. 5

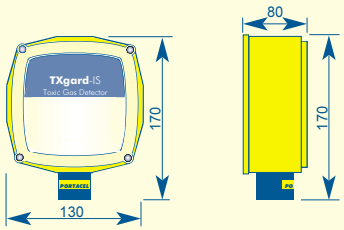

Colne Gas Sensor Head
All Dimensions in millimetres. Do Not Scale

Colne
Cl_2, SO_2 and NH_3

Gas Sensor Heads

Portacel's Colne Cl_2, SO_2 and NH_3 Toxic Gas Sensors utilise electro-chemical sensors installed in a special junction box which also contains the amplifier/transmitter to provide a 2-wire 4-20 mA output. The amplifier/transmitter operates at 7.5 to 32v so the Colne sensor is suitable for use with Portacel systems or with those of other manufacturers.

The detectors are intrinsically safe and require a Zener barrier or similar device between them and the control unit when they are used in a hazardous area.

The sensor housing is a compact design, constructed from plastic to reduce weight and resist corrosion.

- Durable and reliable components
- Low maintenance
- Sensing head is intrinsically safe

Technical Data

Standard range	0-10 ppm
Maximum range	0-20 ppm
Overall dimensions	155 mm **x** 120 mm **x** 75 mm
Weight	1.3 kg
Operating voltage	7.5-32v DC
Operating temperature	-15°C (continuous) -20° to 55°C (intermittent)
Humidity	0-99% RH no condensing
Operating pressure	Ambient ± 10%
Response time	25 seconds
Cable loop resistance	24 ohms with Zener barrier, otherwise 180 ohms at normal 12v
Explosion protection	Intrinsically safe
Approvals (international)	Approval code - E Ex ia IIC T4
Safety certificate number	RGD90/0X - Ex90C2356, RGD90/Toxic-Ex90C2357
Standards	BS 5501 : Pt 1 : 1977 (EN 50014), BS 5501 : Pt 7 : 1977 (EN 50020)
Zones	0, 1 or 2
Gas groups	IIA, IIB or IIC
Zener barrier	Any shunt Zener diode barrier to Ex ia IIC with maximum output 15.75v and 166mA
$Cl_2/SO_2/NH_3$	Gas Head complete with electrochemical sensor

Colne
Hydrogen

Gas Sensor Heads

The Portacel Colne Hydrogen Gas Sensor is designed for permanent installation wherever there is a need to monitor the environment for the presence of hydrogen gas.
The Colne Hydrogen Gas Sensor utilises a low power pellistor, to measure 0-100% Lower Explosive Limit (LEL) hydrogen gas and vapour. Pellistor sensors can be temporarily or permanently poisoned by contact with certain substances, so the Colne sensor utilises a poison resistant pellistor.

The Colne Hydrogen Gas Sensor is designed for long life and the pellistor sensor must be maintained and calibrated throughout its operational life.

- Poison Resistant Pellistor
- Measures 0-100 % LEL hydrogen gas and vapour
- Durable and reliable components
- Low maintenance
- Sensing head is intrinsically safe

Technical Data

Range (%vol)	0-100
Dimensions	155 mm **x** 120 mm **x** 75 mm
Weight	1.3 kg
Operating voltage	4.3-15v
Operating temperature	20-40°C
Humidity	0-99% RH (non-condensing)
Operating pressure	Ambient ± 10%
Cable loop resistance	10 ohms with Zener barrier, otherwise 160 ohms at 17v
Degree of protection	IP55
Explosion protection	Intrinsically safe (pending)
Approval code	Ex ia 1 1 C T4
Standards	EN 50014, EN 50020, SFA 3009
Zones	0, 1 or 2
Gas groups	IIA, IIB or IIC
Zener barrier	Dual barrier MTL 768+ or STL E+943
H_2 Gas head	Complete with pellistor sensor

Technical Data

Overall dimensions	Colne 1: 225 mm **x** 240 mm **x** 75 mm Colne 4: 310 mm **x** 240 mm **x** 75 mm
Weight	Colne 1: 3.2 kg, Colne 4: 5.0 kg
Operating temperature	-10 - 40°C
Connections	Common low, high alarm and fault, DCPO relays rated 5A at 240v AC. Drive for 1 or 2 Yodalights. Each channel, low and high alarm DCPO relays rated 5A at 240v AC. Each channel 1-5v or 4-20 mA
Enclosure protection	IP54 or IP66 optional
Colour	White
Power consumption	50 watts
Alarms	Each channel has red low and high alarm LEDs and amber fault LED
Displays	Red LED, 3 digits for level; green LED, C plus digit for channel number and units pointer for ppm percentage level or percentage volume. Automatic sequencing every 5 secs.
Supplementary information	Battery back-up Power supply: 110v/240 AC 50/60Hz, 12 or 24v DC 50 watts max. (Must be specified by customer) Number of channels: Colne 1:1; Colne 4: 1 to 4

Further Information

For the complete solution to your disinfection requirements, Portacel offer a comprehensive range of products:

Gas Dosing - Liquid Dosing
Analysers - Monitoring - Safety Monitors
Evaporators - Ejectors - Regulators
Electro-chlorination - Cylinder Changeover
Cylinder/Drum Shutdown

For further information concerning Portacel Colne Gas Monitoring Systems or any other products offered by Portacel please contact the Customer Service department at the address and telephone number shown below.

Portacel
Winnall Valley Road
Winchester, Hampshire
SO23 0LL U. K.
Tel: +44(0)1962 705200
Fax: +44(0)1962 705279
e-mail: portacel_sales@tmproducts.com
A part of T M Products

Visit the Portacel web site for further information on this and other Portacel products. http://www.portacel.co.uk

We reserve the right to change the design and specification without notice. © T M Products Port DS. 008. 5k. 05.99

TECHNICAL DATA SHEET
Dual Toxic Gas Monitor Type FGD15

- Optional Self-testing feature using gas generator cells i.e. no gas cylinders required.
- Dual toxic sensor channels.
- Dual 4-20mA analogue outputs.
- Minimum 10-hour battery backup (optional).
- Provision for external battery backup.
- 5 Software controlled SPCO relays.
- 2 Software controlled solid-state outputs (switched 12V) for external beacon and/or sounder.
- Contacts provided for connection of external reset button.
- Backlit graphics LCD user interface.
- Mains failure detection.
- CE Marked.

Preliminary

ELECTRICAL SPECIFICATION

Voltage Range	85-265V AC (50/60Hz)
Supply Current	110mA max (Not including additional loads i.e. beacon or sounder)
Operating Temperature Range	-20°C to +55°C

MECHANICAL SPECIFICATION

Environmental Rating	IP65
Overall Enclosure Length	215mm
Overall Enclosure Width	177mm
Enclosure Depth	81mm nominal
Base Plate dimensions	223(W) x 211(L)
Fixing Holes	7mm diameter holes
Fixing Centres	199(W) x 136(L)
Gland Entry	10 x 16mm Glands

Dimensional Drawing to be added

EVAPORATOR

Series 200 Evaporator

The Portacel series 200 Liquid Chlorine Evaporator is a self contained, large capacity heat exchange system for the conversion of liquid chlorine, sulphur dioxide or ammonia into gas.

The evaporator converts up to 230 kg/hr of liquid to gas within the totally submerged evaporator coil. The Series 200 is fully insulated and provides alarms from a dedicated control panel mounted on the evaporator. The operation of the evaporator is completely automatic, requires no supervision and is designed for use in installations where large quantities of gas are required.

- Low maintenance - reduced deposits in coil
- Coil rated to ASME 8 DIVN.1
- High efficiency heat transfer
- Totally submerged coil
- All critical parameters monitored via volt free contacts
- Integral control panel
- Fully insulated water bath

PORTACEL

EVAPORATOR

HOW IT WORKS

Vapourisation is achieved by passing the liquid through a heat exchange coil within a water bath. This bath is heated by temperature controlled electric immersion heaters. Efficient insulation of the water bath prevents heat loss from the system and maximises the proportion of energy used for the liquid to gas conversion.

The use of the evaporator coil is such that the liquid level rises or falls during operation dependent on demand. This prevents the formation of residual deposits, a common problem with pot type evaporators. This results in minimal down time for cleaning and gives low maintenance costs as well as prolonged operational life.

The Series 200 is designed to be integrated into a complete Portacel chlorination system. This system must include a suitably sized dosing unit and other necessary equipment between the Evaporator and the supply to be treated.

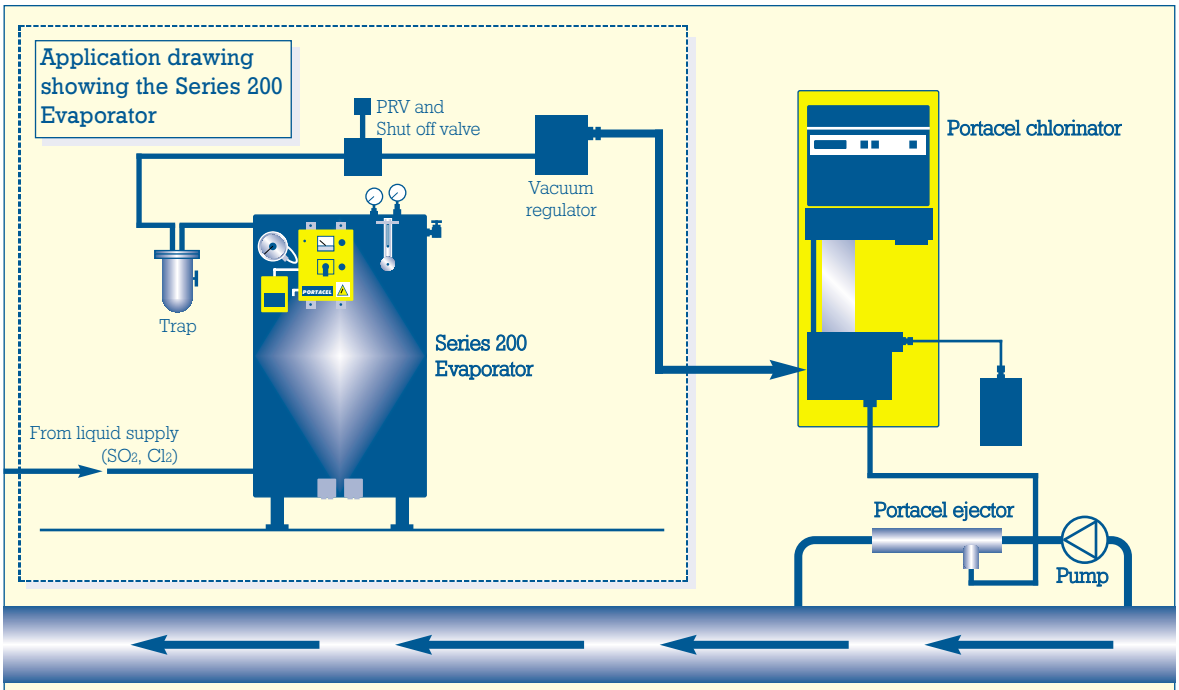

Fig 1

Further Information

For further information concerning the Portacel Series 200 Evaporator or any of the other products offered by Portacel Disinfection Systems please contact the Portacel sales office at the address and telephone number shown on the back of this data sheet.

Product Weights & Dimensions

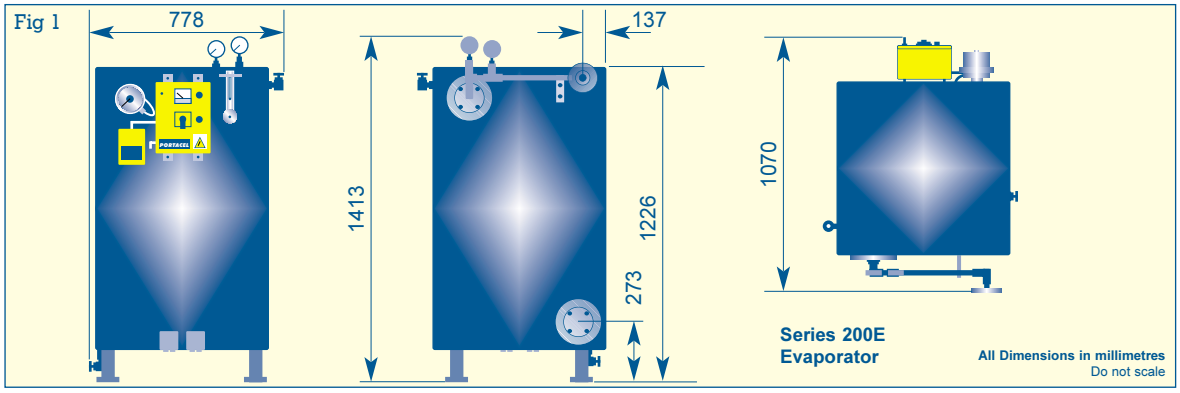

Technical Data

Capacity	Series 200 - Dry Gas - 230 kg/h Cl_2, 180 kg/h SO_2. Water bath 0.37m^3
Overall Dimensions	1600 mm high x 750 mm wide x 890 mm deep.
Weight	Empty: 210 kg Full: 580 kg.
Service Requirements	380/440v, 3-phase, 50/60 Hz separate supply to immersion heaters
	(4 wire star connected 18kw) 110 or 200/240v single phase,
	50/60Hz separate supply to indicator/controller.
Connections	
Liquid Inlet	1½" NB ANSI 300lb raised face flange. Blank flange supplied for customer use
Gas Outlet	1" NB ANSI 300lb raised face flange.
Water Inlet	¾" BSP gate valve to BS 5154, screwed to BS 21.
Water Drain	¾" BSP gate valve to BS 5154, screwed to BS 21.
Water Overflow	¾" BSP, screwed to BS 21.
Electrical Connections	20 mm conduit holes in contactor. 3-Phase supply; 4mm (4Ba) barrier strip terminals single phase supply.
Environmental Temp.	50°C max (est.)
Storage Temp.	50°C max (est.)
Max. Working Pressure	12.5 bar.
Power Consumption	18kw
Initial Heat-up Time	1.25 hours. Assuming an initial water temperature of 4°C.
Cathodic Protection	Active type magnesium alloy anode suspended in water bath with integral ammeter.
Coil Construction Code	Die penetrant and radiographed welded construction steel tube, zinc coated externally ASME 8 DIVN 1.
Immersion Heaters	2 x 9kw 3 element 24" immersed length suitable for 415v/3ph/60Hz supply.
Water Bath Construction	3mm thick, welded steel tank, hot dip galvanised 20mm thick external insulation.
Water Consumption	Minimal continuous overflow.
Colour	Black GRP skin and yellow control panel.
Indicator Panel	
Water Temp.	100 mm diameter dial, bi-metallic type, 0-100°C with adjustable high and
Indicator/Alarm	low setting pointers energising two internal 3 amp relays, each fitted with
	a change-over contact. Accuracy ± 1% of span.
Gas Temp. Gauge	69 mm diameter dial, bi-metallic type, 0-100°C. Accuracy ± 1% of span.
Gas Pressure Gauge	63 mm diameter dial, diaphragm protected, 0-25 bar(g). Accuracy ± 1% of span.

The Portacel Evaporator

- Greater efficiency

The Portacel coil type heat exchange system has up to 1.5 times more surface area in contact with the water bath than most traditional pot type systems. The large surface area of the coil also aids efficiency by increasing the thermal movement of the water within the bath, ensuring an even water temperature.

- Excellent corrosion resistance

The coil is totally submerged in the water bath so reducing corrosion caused by any air/water interface. The coil is further protected by means of a sacrificial magnesium anode suspended in the centre of the coil.

- Increased super heat

The coil of the Evaporator generates up to 20% superheat. This ensures that the generated gas vapour does not reliquify.

- Minimum maintenance

The coil is self cleaning with any contamination within the liquid chlorine being carried up through the coil, initially by the chlorine liquid and then, after vapourisation, by the chlorine gas. Any such contaminants are then deposited in the large capacity filter. The design of the Portacel Evaporator also allows direct access to all components making any necessary maintenance an easy procedure.

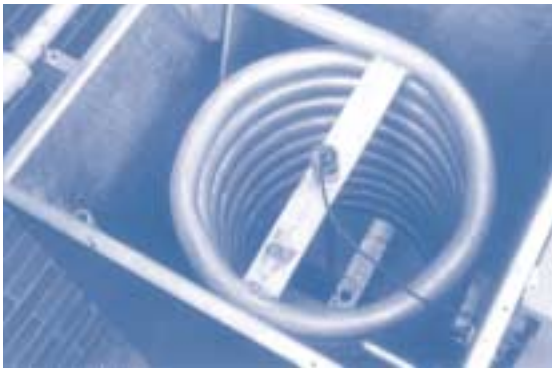

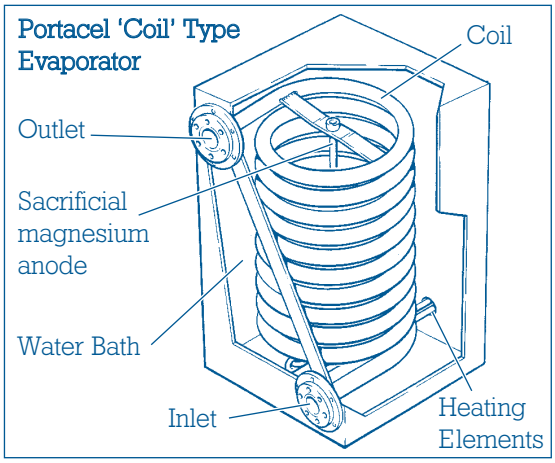

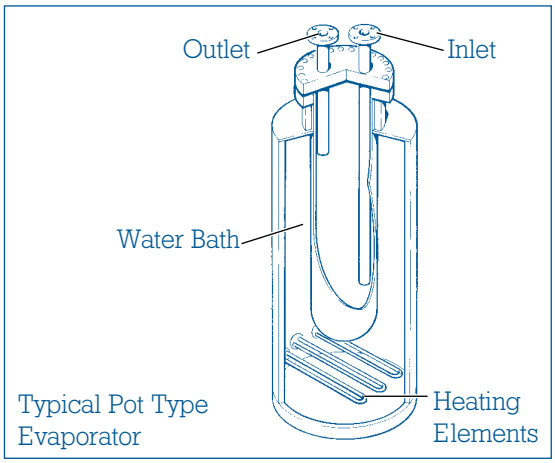

Portacel
Winnall Valley Road
Winchester, Hampshire
United Kingdom, S023 0LL
Tel: +44 (0)1962 705200
Fax: +44 (0)1962 705279
e-mail: portacel_sales@tmproducts.com
A part of T M Products

PORTACEL
DISINFECTION SYSTEMS

We reserve the right to change the design and specification without notice © T M Products. Port DS. 005. 5k. 07.98

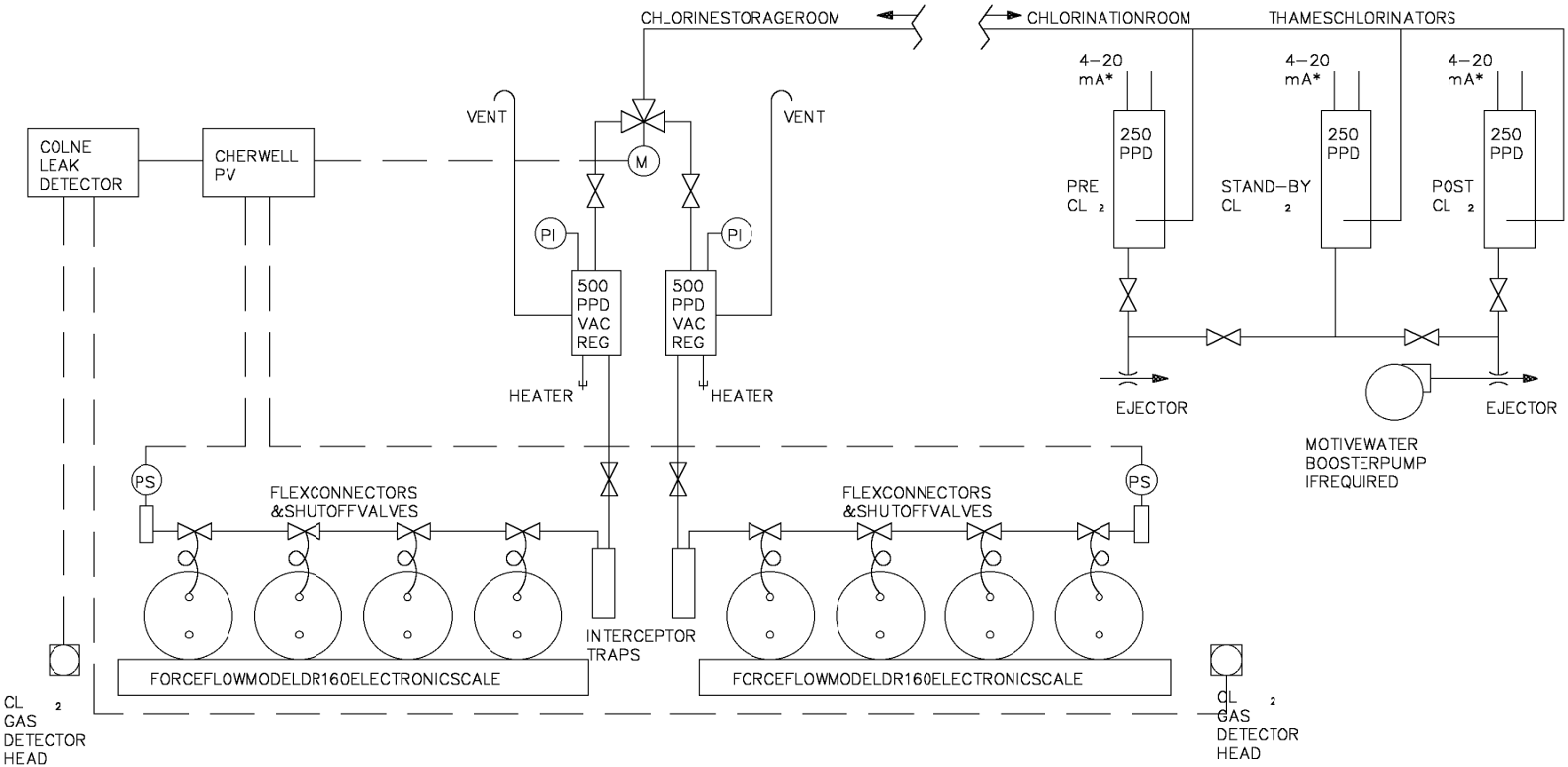

NOTE:
*FLOWCONTROL&RESIDUALFROMMEDWAY2ANALYZERS.

DONOTSCALE

THISDRAWINGISSENTTOYOUSUBJECTTORETURNUPONDEMAND,ANDWITHTHE UNDERSTANDINGTHATITISNOTTOBEREPRODUCED,COPIEDORUSEDDIRECTLYOR INDIRECTLY,INANYWAYDETRIMENTALTOOURINTERESTS.ALLPATENTRIGHTSRESERVED.

REVISION	CHLORINATION& CHANGEOVERSYSTEM LAYOUT
1	
2	
3	

DRAWNBY	CHECKEDBY	DATE	SCALE	DWG NO
CRF	AGC	24SEPT98	NTS	SE2212L1

PV & Thames Layout Ton 500 PPD.max

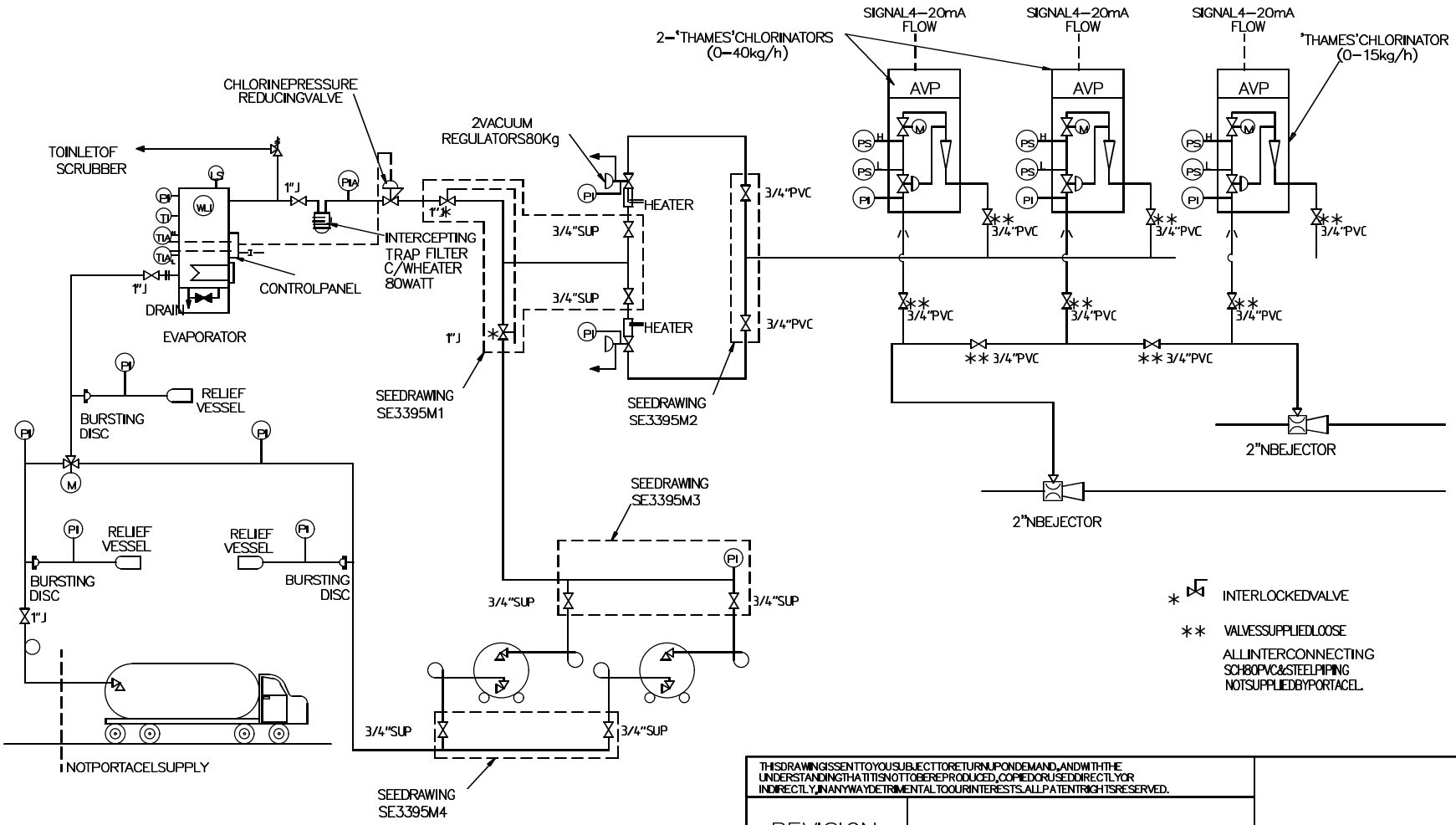

THIS DRAWING IS SENT TO YOU SUBJECT TO RETURN UPON DEMAND, AND WITH THE UNDERSTANDING THAT IT IS NOT TO BE REPRODUCED, COPIED OR USED DIRECTLY OR INDIRECTLY, IN ANY WAY DETRIMENTAL TO OUR INTERESTS. ALL PATENT RIGHTS RESERVED.

REVISION	
1	
2	
3	

CHLORINATION SYSTEM P&ID

EL CHILLON, PERU SE3395

DRAWN BY	CHECKED BY	DATE	SCALE	DWG NO
SOF	AF	11JAN01	NTS	SE3395USPID

DO NOT SCALE

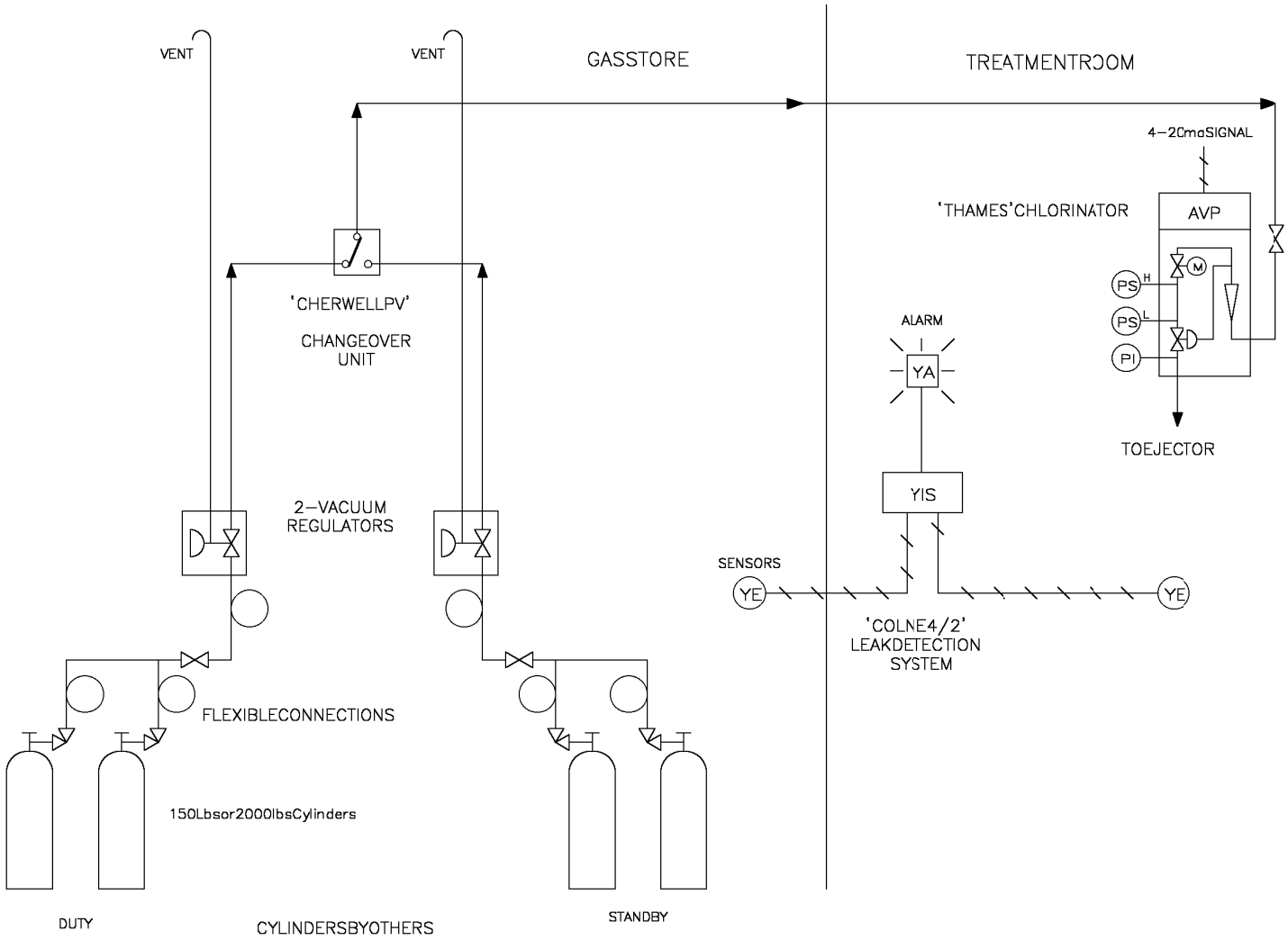

THISDRAWINGISSENTTOYOUSUBJECTTORETURNUPONDEMAND,ANDWITHTHE UNDERSTANDINGTHATITISNOTTOBEREPRODUCED,COPIEDORUSEDDIRECTLYOR INDIRECTLY,INANYWAYDETRIMENTALTOOURINTERESTS.ALLPATENTRIGHTSRESERVED.

REVISION	
1	
2	
3	

CHLORINATIONSYSTEM LAYOUT

DRAWNBY	CHECKEDBY	DATE	SCALE	DWG NO
CRH	AGC	24SEPT98	NTS	SE241371US

DONOTSCALE

AUTOMATIC VALVE POSITIONER 2 (AVP2)

OPERATING AND MAINTENANCE MANUAL

Part No. 41313

Issue 2
May 2001

Portacel,
Winnall Valley Road,
Winchester,
Hampshire, SO23 0LD
United Kingdom.

Tel: 44 (0) 1256 896966
Fax: 44 (0) 1962 866084

CONTENTS

Contents (This page)

Warnings

Amendment Record

Introduction

Chapter 1: General Description

Introduction
1. Leading Particulars
2. Purpose

Chapter 2: Technical Description

Introduction
1. General
2. Enclosure
3. Front Panel
4. Power Supply (Personality) Board
5. Computer (Core Module) Board
6. Motor gearbox Assembly

Chapter 3: Installation and Commissioning

Introduction
1. General
2. Installation
3. Commissioning

Chapter 4: Operating Instructions

Introduction
1. General
2. Menu Overview
3. Parameter

Chapter 5: Maintenance Procedures

Introduction
1. General
2. Removal and Replacement
3. Fault Finding
4. Spare Parts

Appendix

Menu Software Family Tree

WARNINGS

WARNING!
Only suitably Qualified/Trained personnel should be allowed to work on this equipment.

WARNING!
If incorrectly used this equipment can cause severe injury. Those who use the equipment should be trained in its proper use, and should have read and understood the safety instructions contained in this manual before attempting to operate or adjust the equipment.

WARNING!
The main electrical supply can kill. Some alarm systems are provided with their own power supply at mains voltage which comes to the unit for switching. Check the site installation diagrams and isolate ALL electrical supplies to the Dosing Unit before commencing these procedures.

WARNING!
The gas used can cause serious injury. For the safety precautions required refer to the gas manufacturers data sheets and the site operating instructions.

WARNING!
The gas used can cause serious injury. The system must be purged of all gas before the equipment is dismantled.

AMENDMENT RECORD

Amendment No	Date	Signature
02	May 2001	

INTRODUCTION

The Automatic Valve Positioner 2 (see Chapter 1, Fig 1-1) is designed to automatically control the rate of flow of gas liquid under vacuum conditions, from storage cylinders, for dosing into the treated water main of water treatment plants.

The unit controls the gas liquid leaving the storage facility via vacuum regulators. Before the vacuum regulators the gas liquid is supplied at relatively high pressure. After the vacuum regulators the Dosing Unit draws gas liquid through a vacuum system and regulates the rate at which the gas liquid is supplied into the water main via an ejector to treat the water.

COPYRIGHT

© Portacel Disinfection Systems 2000

All rights reserved. No part of this publicationmay be reproduced, stored in a retreival system, or transmitted in any form or by any means, electronic, mechanical, photocopying, recording or otherwise, without the prior permission of Portacel Disinfection Systems.

Chapter 1

General Description

Contents

Para.		Page
	INTRODUCTION	**1.3**
1.	**LEADING PARTICULARS**	**1.5**
1.1	Weight	1.5
1.2	Enclosure	1.5
1.3	Display and Controls	1.5
1.4	Electrical	1.5
1.5	Output Drive and Accuracy	1.6
1.6	Processor Memory and Control	1.6
2.	**PURPOSE**	**1.6**

ILLUSTRATIONS

Fig. No.		Page
1.1	Automatic Valve Positioner Unit (Fitted to Thames, Floor-mounted, Chlorinator)	1.7
1.2	Automatic Valve Positioner Unit (Fitted to Thames, Wall-mounted, Chlorinator)	1.8
1.3	Automatic Valve Positioner Unit (Fitted to Trent Liquid, Wall-mounted, Chlorinator)	1.9

INTRODUCTION

This Chapter gives the general description of the Automatic Valve Positioner 2 only. Information that is already included in the Dosing Unit Operating and Maintenance Manual is not repeated in this manual.

1. LEADING PARTICULARS

This is a list of the dimensions, weight, input and output requirements of the Automatic Valve Positioner 2.

1.1 Weight

Complete Unit 2.5kg

1.2 Enclosure

Dimensions ..... 230mm x 225mm x 115mm

1.3 Display and Controls

Main Display ..... Liquid Crystal Display
Controls ..... Arrow Keys (push buttons)

1.4 Electrical

Mains Supply Voltage ..... 110V or 230V at 48 to 64Hz
Backup ..... 9V Battery (For use on mains electrical supply failure)
Consumption ..... 16 Watts (maximum)
Fuse ..... 0.5A (230V supply), 1.0A (110V supply)
Control Inputs ..... 0 - 10mA or 4 - 20mA DC

All input signals are taken via different amplifiers (100 ohm input resistance) and not referenced to ground (ie floating). Up to 15 signals may be used of which 6 are currently employed:

(1) Water flow rate ..... 0 to 9999m^3 hr.

(2) Residual ..... 0 to 15.0ppm

(3) Retransmissions:

0 to 10mA DC ..... Maximum load 1k ohm
4 to 20mA DC ..... Maximum load 500 ohms
Vacuum alarm contact ..... Rated at 230V

(4) Trim.

(5) Remote set point.

(6) Call to service.

1.5 Output Drive and Accuracy

Output shaft accuracy ..... Better than 1
Analogue inputs ..... Resolved to 0.1
Servo motor gearbox ..... Rated for continuous duty

1.6 Processor Memory and Control

Processor ..... EEPROM
Interface ..... RS 232
..... (RS 485 - optional)

2. PURPOSE

The Automatic Valve Positioner 2 (see Fig 1-1) is designed to automatically control the rate of flow of gas liquid under vacuum conditions, from storage cylinders, for dosing into the treated water main of water treatment plants.

The unit controls the gas liquid leaving the storage facility via vacuum regulators. Before the vacuum regulators the gas liquid is supplied at relatively high pressure. After the vacuum regulators the Dosing Unit draws gas liquid through a vacuum system and regulates the rate at which the gas liquid is supplied into the water main via an ejector to treat the water.

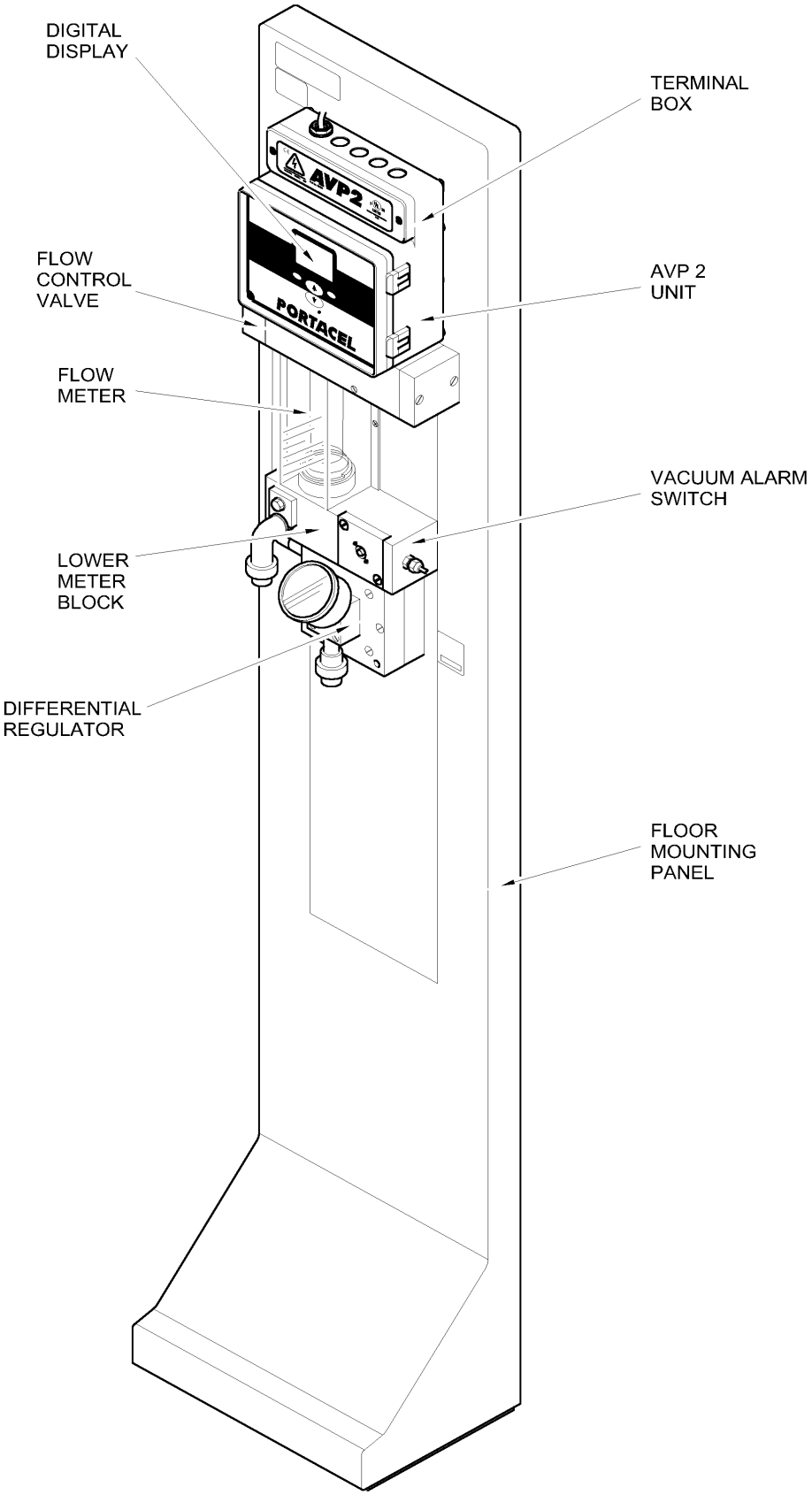

Fig 1.1 Automatic Valve Positioner Unit (Fitted to Thames, Floor-mounted, Chlorinator)

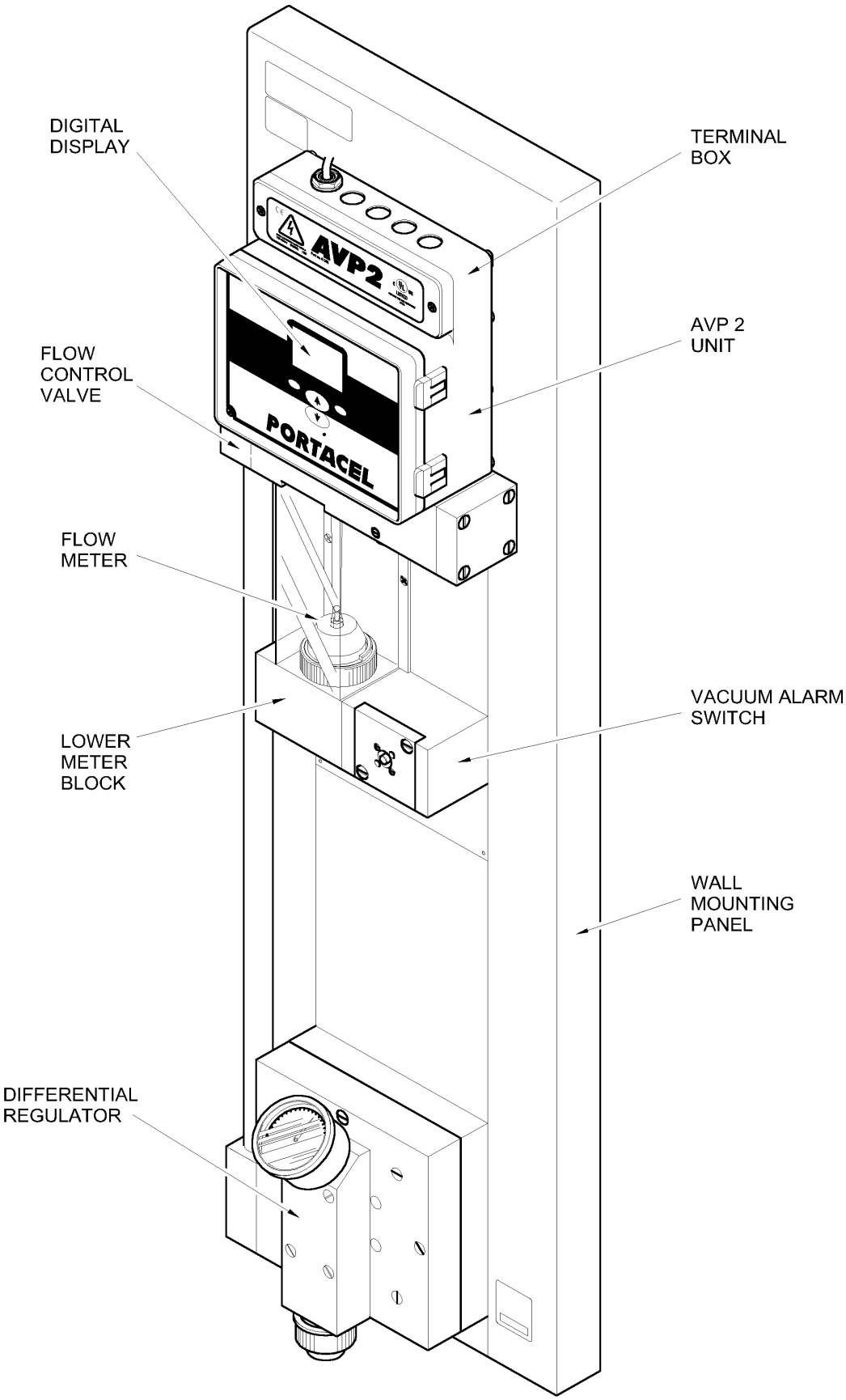

Fig 1.2 Automatic Valve Positioner Unit (Fitted to Thames, Wall-mounted, Chlorinator)

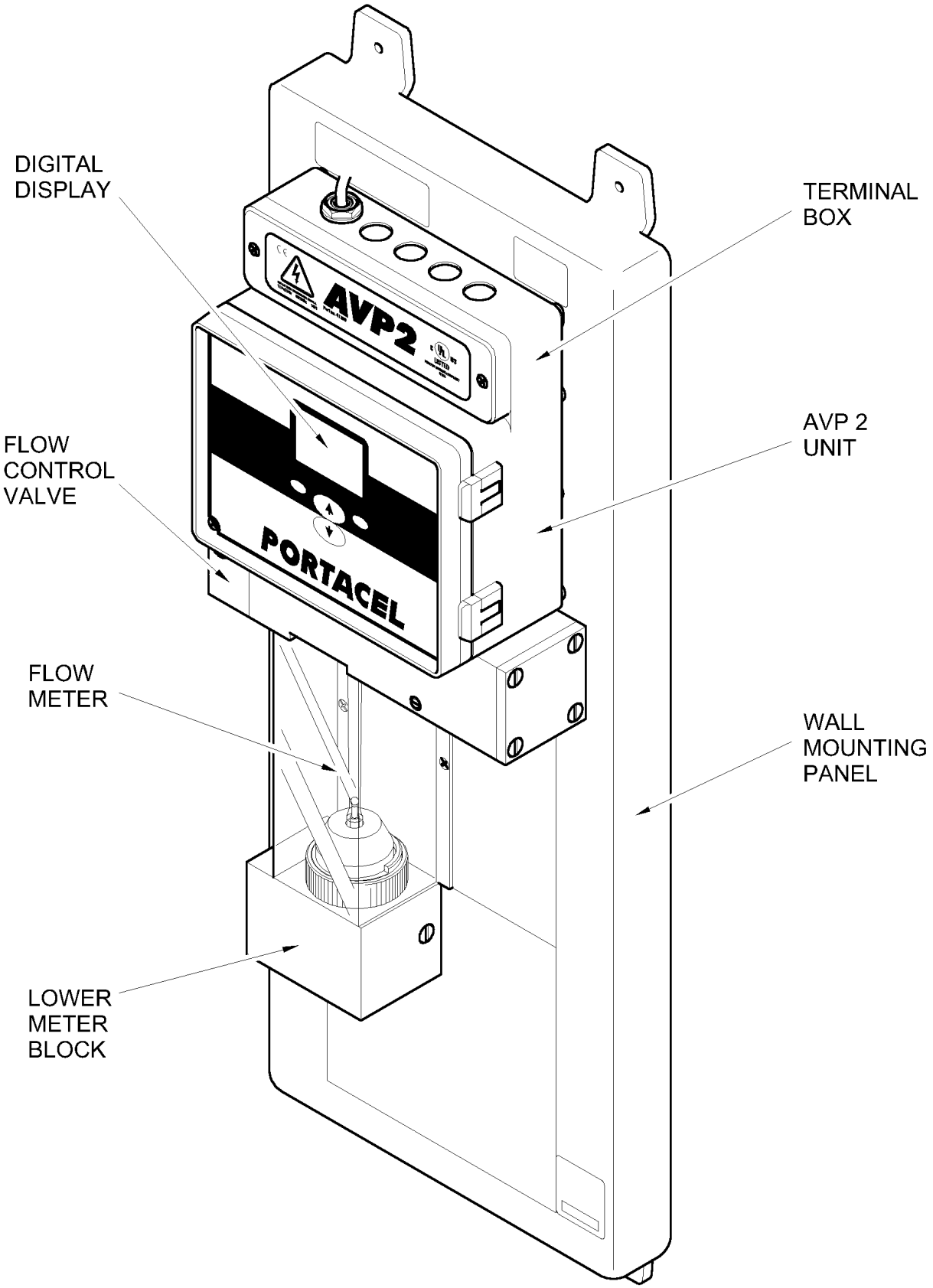

Fig 1.3 Automatic Valve Positioner Unit
(Fitted to Trent Liquid, Wall-mounted, Chlorinator)

Chapter 2

Technical Description

Contents

Para.		Page
	INTRODUCTION	2.3
1.	GENERAL	2.5
2.	ENCLOSURE	2.5
3.	FRONT PANEL	2.6
4.	POWER SUPPLY (PERSONALITY) BOARD	2.6
5.	COMPUTER (CORE MODULE) BOARD	2.7
6.	MOTOR/GEARBOX ASSEMBLY	2.7

ILLUSTRATIONS

Fig. No.		Page
2.1	Automatic Valve Positioner 2 (General View)	2.8
2.2	Automatic Valve Positioner 2 (Exploded View)	2.9
2.3	Power Supply (Personality) Board	2.10
2.4	Computer (Core Module) Board	2.11
2.5	Motor gearbox Assembly	2.12

INTRODUCTION

This Chapter gives the technical description of the principal components of the Automatic Valve Positioner 2 Unit.

1. GENERAL

The Automatic Valve Positioner 2 (See Fig. 2.1) is installed into a Dosing Unit to automate the supply of gas liquid. The AVP2, when set up, will control the operation of the dosing unit automatically. There is provision to check and change parameters and to manually override the settings.

The AVP2 has five main assemblies:

(a) Enclosure.
(b) Front Panel.
(c) Power Supply (Personality) Board.
(d) Display (Computer) Board.
(e) Motor gearbox Assembly.

2. ENCLOSURE

The Enclosure is an IP54 polycarbon container with a door (Front Panel) hinged on the right hand side and secured by 4 cross-head screws. The enclosure houses the Power Supply (Personality) Board and the Motor gearbox Assembly.

Part of the Enclosure structure is the Terminal Box located at the upper section of the unit. The Terminal Box has a separate, detachable cover secured by 2 cross-head screws. The upper face of the Terminal Box has 5 in number 20mm holes for cable access.

The cables connect to terminal rails in the Terminal Box and are then transferred to the cable assemblies within the Enclosure (see Fig 2.2). From left to right the terminal blocks are:

(a) JP3, Mains Supply. (230V or 115V)

(b) JP2, DC.

(c) TP4, Analogue Input Output.

(d) TP5, Digital Input.

(e) TP6, Relay Outputs.

On the underside of the Enclosure is the mechanical drive connection from the Motor gearbox in the Enclosure to the Control Valve in the Dosing Unit.

3. FRONT PANEL

The Front Panel is secured to the Enclosure using four screws. When the screws are removed the Front Panel can be hinged out approximately 160 .

The Front Panel houses the Liquid Crystal Display with a protective transparent screen and a four pushbutton keypad. The display shows software messages to the operator. The software messages are abbreviated due to display size limitations.

The four pushbuttons on the Front Panel are used to move through the menu system and input data as required. There are two large pushbuttons marked ▲ and ▼ and two small pushbuttons either side of them. In general the operation of these buttons is:

▲	Increases a parameter value.
▼	Decreases a parameter value.
Left Pushbutton	Moves back through the menu from one parameter to another.
Right Pushbutton	Selects an option to progress to the next screen.

Secured to the rear face of the Front Panel by four studs and nuts is the Computer (Core Module) Board. A 60-way ribbon cable connects the Computer (Core Module) Board to the Power Supply (Personality) Board providing power to the LCD and allowing the transfer of data signals.

4. POWER SUPPLY (PERSONALITY) BOARD

Retained in the Enclosure with six cross-head screws is the Power Supply (Personality) Board. Circuits on this board link power supplies and data from the Terminal Box to the Computer (Core Module) Board and hence the display on the Front Panel. The Power Supply (Personality) Board also provides the drive voltage for the Motor gearbox Assembly.

A cartridge fuseholder is fitted at the upper left-hand corner of the Power Supply (Personality) Board located beneath a transparent insulated protection cover. The current rating of the associated fuse is dependent on the selected power supply voltage. (i.e. 0.5A for 230V and 1.0A for 110V).

Mains voltage selection is by positioning 2 links located at the upper left-hand corner of the Power Supply (Personality) Board approximately 40mm to the right of the fuseholder. Refer to Chapter 3, Installation and Commissioning, for the correct setting of the voltage selection links.

A 9V PP3 battery is mounted on the Power Supply (Personality) Board to supply the Motor gearbox Assembly allowing operation of the Control Valve in the case of a mains voltage supply failure.

At the upper right-hand side of the Power Supply (Personality) Board is a 9-pin D socket for connecting to an IBM compatible Personal Computer. This is an RS232 connection and can be used, if required, to Commission the unit after installation.

5. COMPUTER (CORE MODULE) BOARD

The Computer (Core Module) Board provides the circuits for the front panel Liquid Crystal Display and the control pushbuttons. Data from this board controls the operation of the Motor gearbox Assembly and hence the operation of the Control Valve.

6. MOTOR/GEARBOX ASSEMBLY

The Motor gearbox Assembly is mounted vertically in the Enclosure. An electric motor drives a shaft via a gearbox through the lower face of the Enclosure to adjust the Control Valve and subsequently the dosing rate. The motor is normally driven under the control of the Computer (Core Module) Board and is fitted with a potentiometer providing feed-back of the valve position.

In the event of a main power supply failure, the motor is powered by a 9V PP3 battery and controlled by pressing the ▼ keypad pushbutton to produce clockwise motion and the ▲ keypad pushbutton to produce counter-clockwise motion. This action may be required to close the Control Valve and stop the dosing operation.

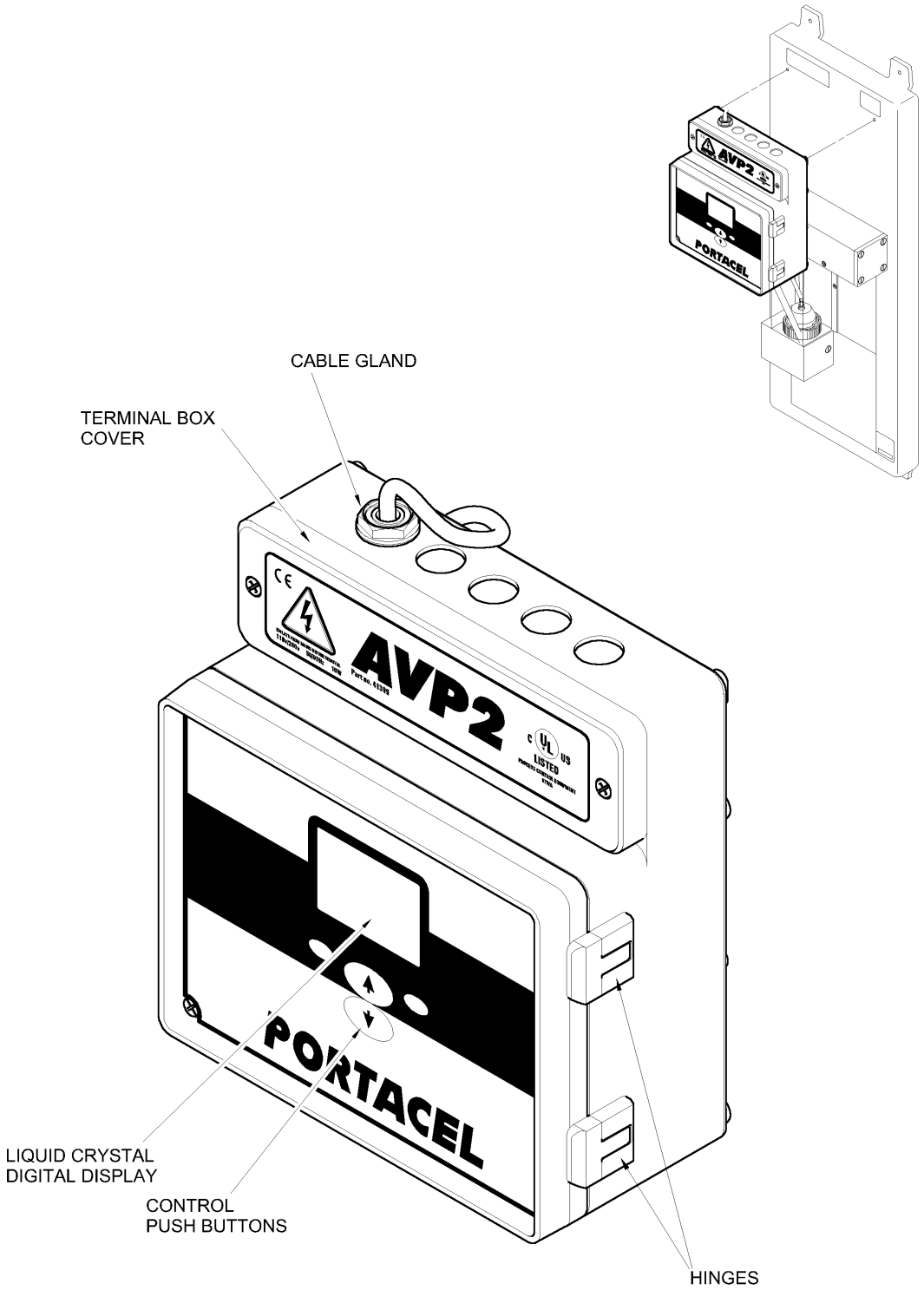

Fig 2.1 Automatic Valve Positioner 2 (General View)

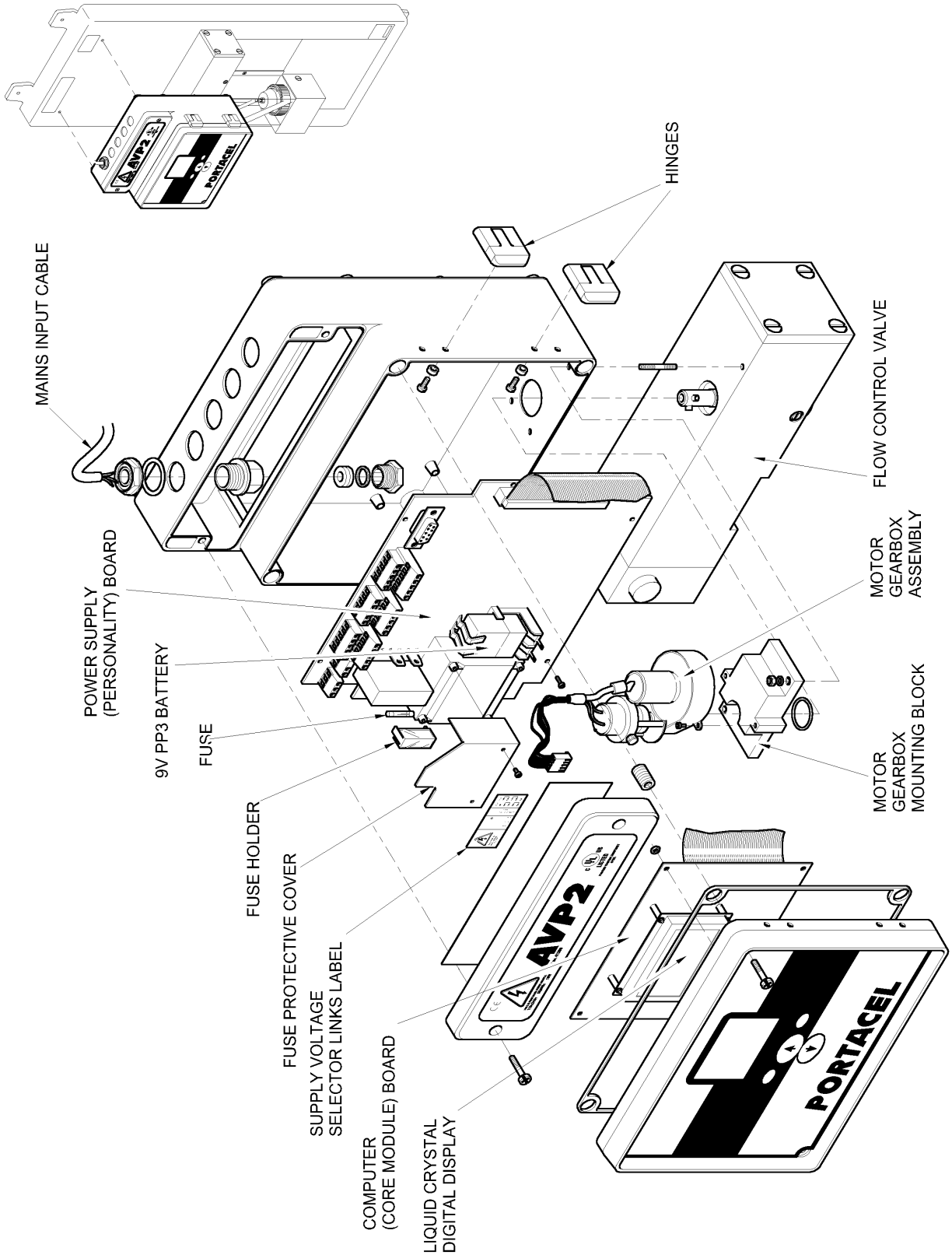

Fig 2.2 Automatic Valve Positioner 2 (Exploded View)

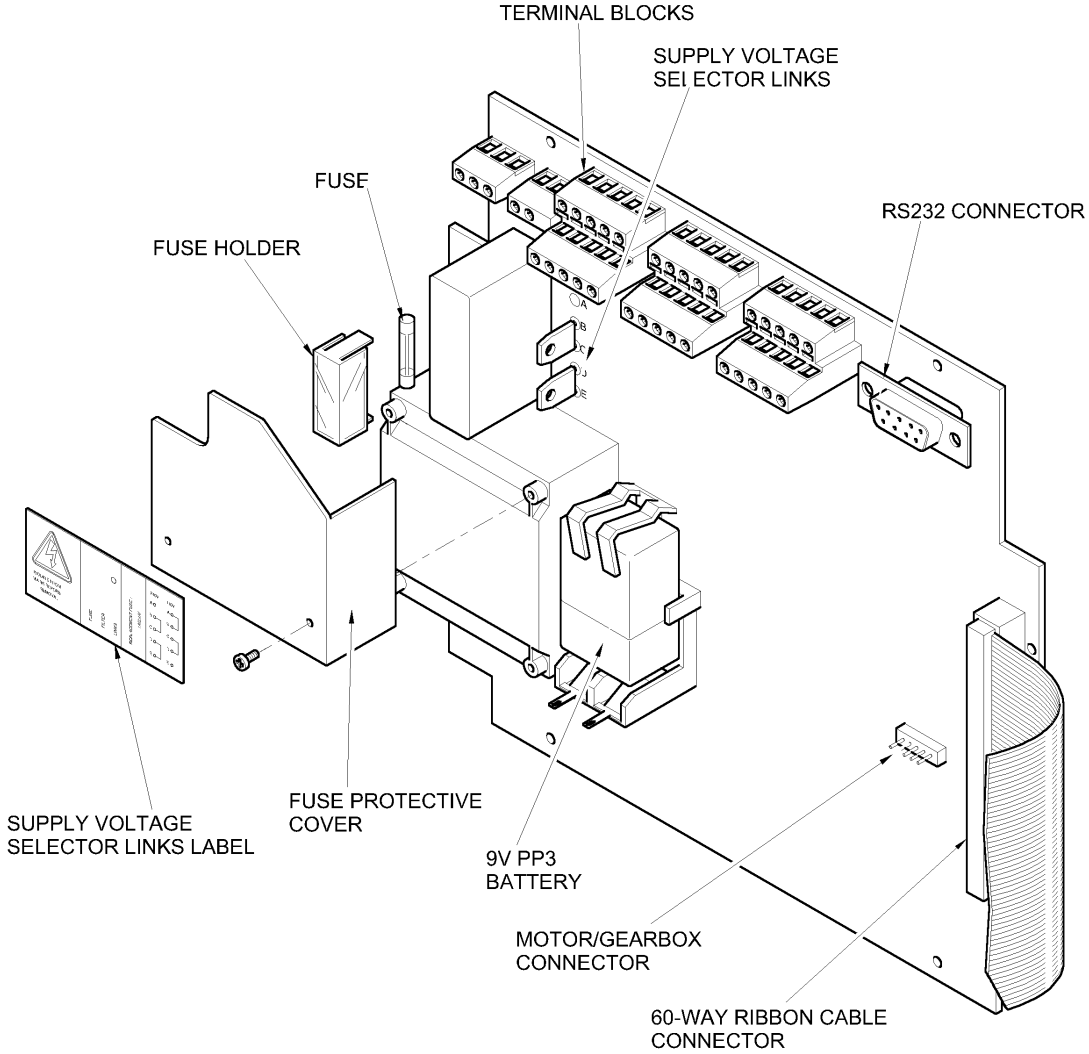

Fig 2.3 Power Supply (Personality) Board

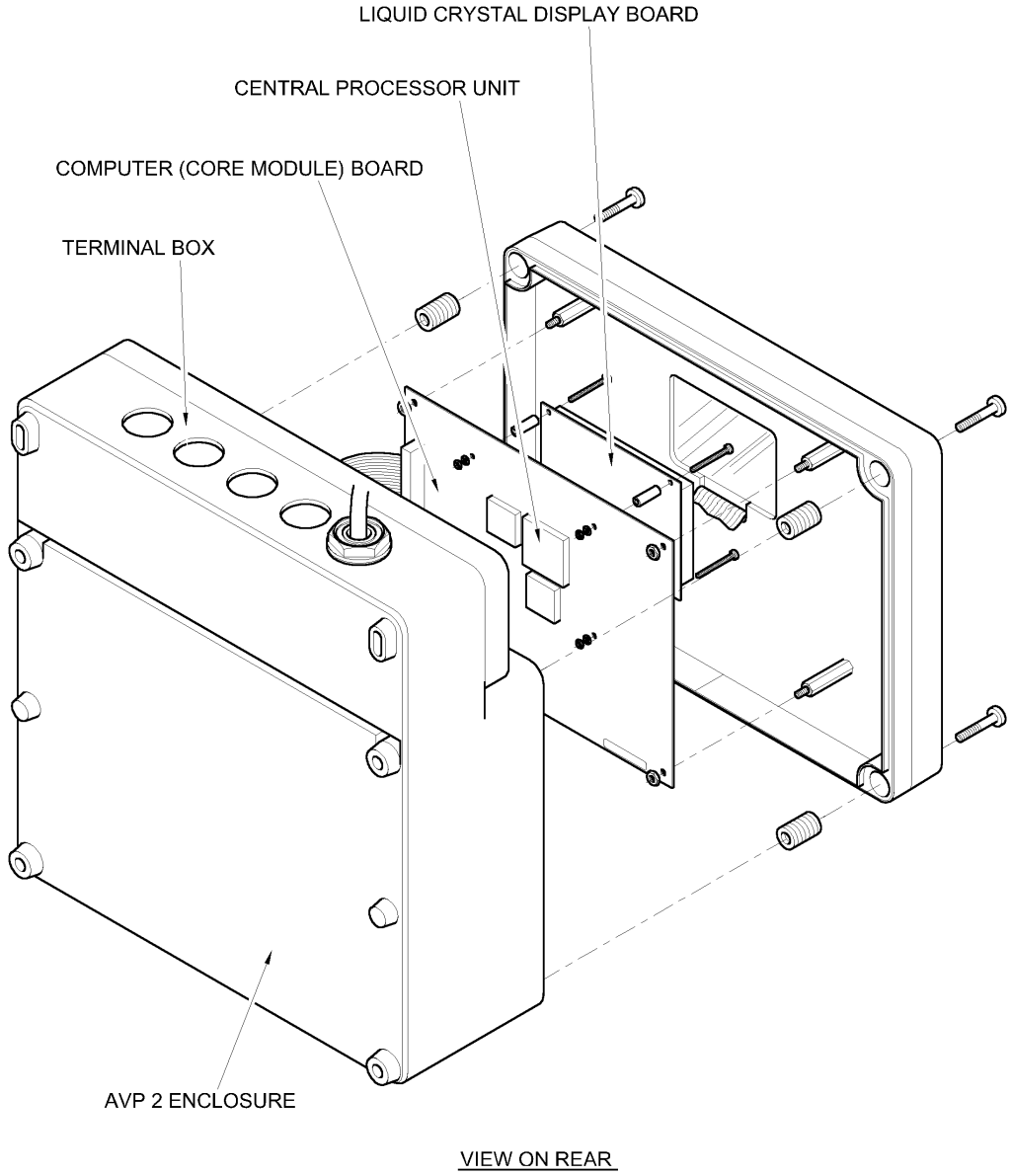

Fig 2.4 Computer (Core Module) Board

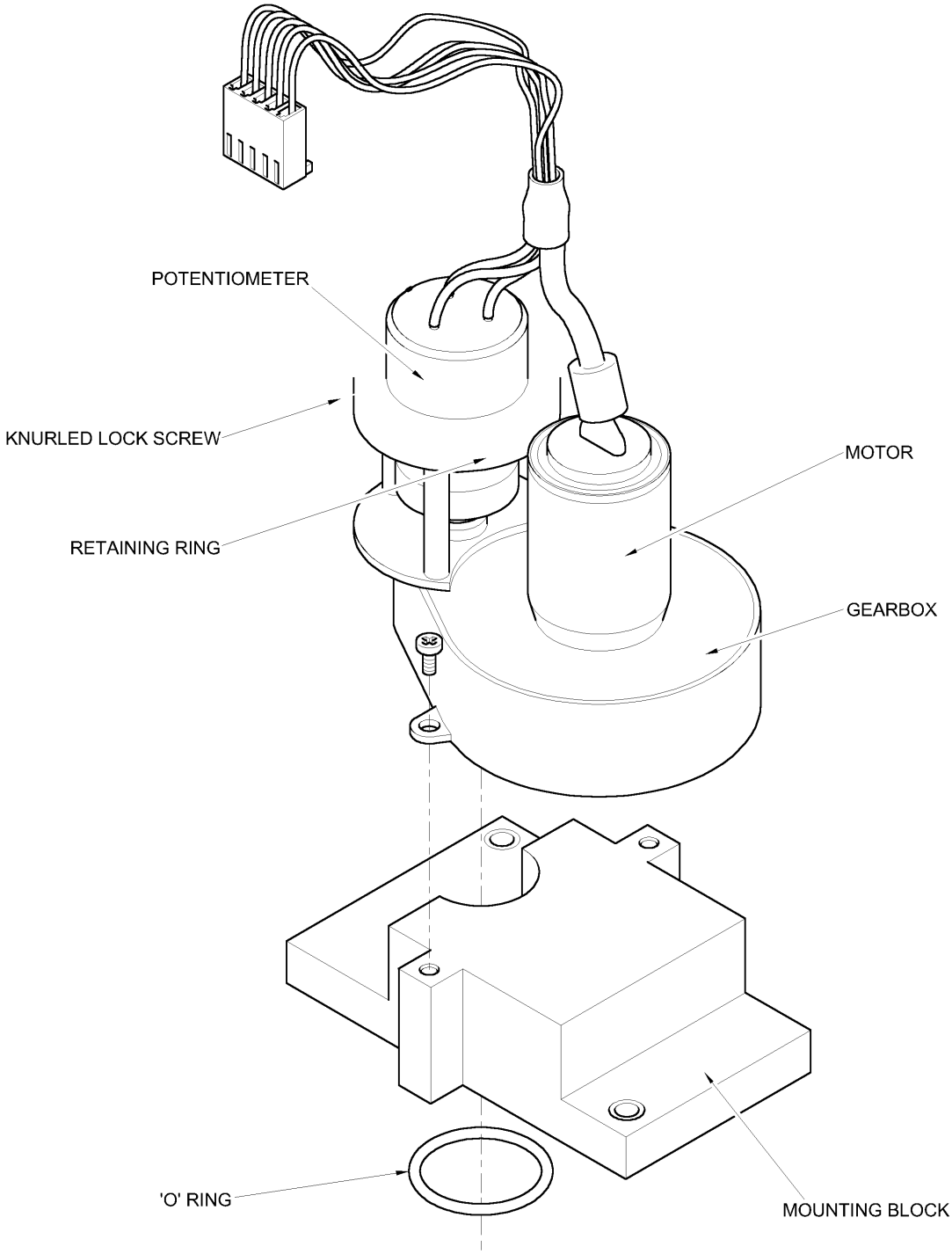

Fig 2.5 Motor/gearbox Assembly

Chapter 3

Installation and Commissioning

Contents

Para.		Page
	INTRODUCTION	**3.3**
1.	**GENERAL**	**3.5**
2.	**INSTALLATION**	**3.5**
3.	**COMMISSIONING**	**3.10**
3.1	General	3.10
3.1.1	Calibration	3.10
3.1.2	Commissioning	3.10
3.2	Menu Structure	3.11
	EXAMPLE OF SET-UP PROCEDURE	**3.12**
3.3	Set-Up	3.12
3.4	Calibrate	3.15
3.4.1	Procedure for Calibrate	3.16
3.5	Parameter	3.24
3.5.1	Flow Only ..... Mode 1 - Flow	3.24
3.5.2	Residual Only ..... Mode 2 - CL_2-	3.24
3.5.3	Residual and Flow ..... Mode 3 - CL_2	3.25
3.5.4	Flow, Residual and Trim ..... Mode 4 - CL_2	3.26
3.5.5	Flow and Residual ..... Mode 5 - SO_2	3.26
3.5.6	Feed Forward and Flow ..... Mode 6 - SO_2	3.27
3.5.7	Feed Forward, Residual and Flow ..... Mode 7 - SO_2	3.27
	EXAMPLE OF PARAMETER SETTING	**3.28**
3.6	Run	3.32
3.7	Control Loop Algorithms	3.41
3.8	Terms and Definitions	3.42

(Continued)

Contents (continued)

ILLUSTRATIONS

Fig. No.		Page
3-1	AVP2 Terminal Blocks	3.8
3-2	Terminal Box Connections Label	3.9

INTRODUCTION

This Chapter gives the installation and Commissioning procedures for an Automatic Valve Positioner 2 Unit only. Refer to the specific Operating and Maintenance Manual of the dosing unit for the installation and commissioning of the associated gas liquid doser equipment at the individual site.

Before carrying out the commissioning procedures detailed in this chapter, ensure that installation and setting to work of the associated gas liquid doser equipment has been successfully completed.

1. GENERAL

The procedures in this Chapter assume that the Installation and Commissioning procedures detailed in Chapter 3 of the Dosing Unit Manual have been carried out successfully.

2. INSTALLATION

WARNING!
The main electrical supply can kill. Some alarm systems are provided with their own power supply at mains voltage which comes to the unit for switching. Check the site installation diagrams and isolate ALL electrical supplies to the Dosing Unit before commencing these procedures.

WARNING!
Only suitably Qualified/Trained personnel should be allowed to work on this equipment.

(1) At the AVP2 unit, loosen the two cross-head screws securing the Terminal Block cover and remove the cover (see Fig 3-1).

(2) Present the cables for connection through the cable glands and into the Terminal Block area.

(3) Refer to the wiring schematic (see Fig 3-2) and connect the equipment cables which are relevant to the site installation.

NOTE:
In some installations a Vacuum Alarm System is incorporated. Where this is the case, additional wiring is required and connected to the Terminal Block as shown below:

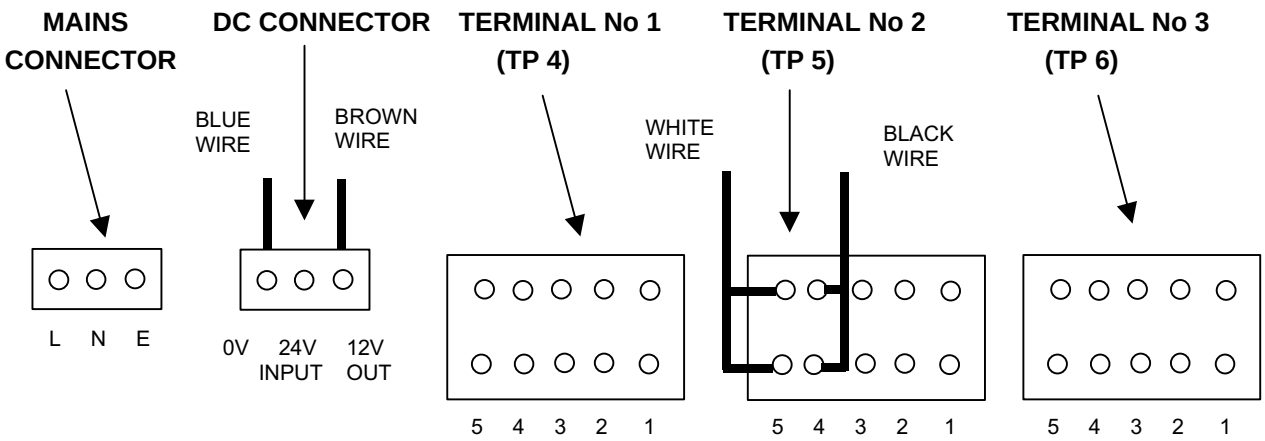

Vacuum Alarm System - Additional Wiring

(4) Locate the four cross-head screws securing the unit Front Panel and loosen the screws.

(5) Pull the front cover outwards to allow the panel hinges to slide forward and then swing the panel to the right on the hinges. The Front Panel will swing through approximately 160 giving access to the Power Supply (Personality) Board on the left-hand side and the Computer (Core Module) Board on the right-hand side.

(6) The two voltage selector links, located on the upper left-hand part of the Power Supply (Personality) Board, are factory set at the 230V settings. If the power supply at the site is 110V then the voltage selector links must be positioned for 110V. The link positions for 230V and 110V settings are detailed on the fuse protection cover adjacent to the links as shown below.

Voltage Selector Links - Settings

(7) Five relays located on the upper right-hand part of the Power Supply (Personality) Board are configured such that:

R1 Call-to-Service.
R2 Unit in Manual Control.
R3 Unit Error (produces a general indication that an error has occurred).
R4 High Vacuum.
R5 Low Vacuum.

(8) The relays can be selected to actively close or open depending upon the user requirements. This is achieved by selecting and moving the relay links (located above the five relays) as follows:

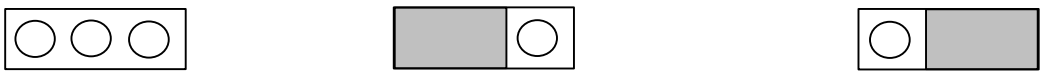

RELA LINK ACTIVE CLOSED ACTIVE OPEN

Relay Selector Links - Settings

(9) Check that the cables have been connected correctly and checked against the wiring schedule. Confirm that the voltage selector links are correctly positioned and all cables and fittings checked to be secure, carry out any relevant tests to check the connections.

(10) Close the front panel, pushing it home against the enclosure and tighten the retaining screws.

(11) Replace the Terminal Block cover and tighten the two cross-head securing screws.

(12) Switch the mains electrical supply to ON.

(13) The AVP2 is now ready for commissioning.

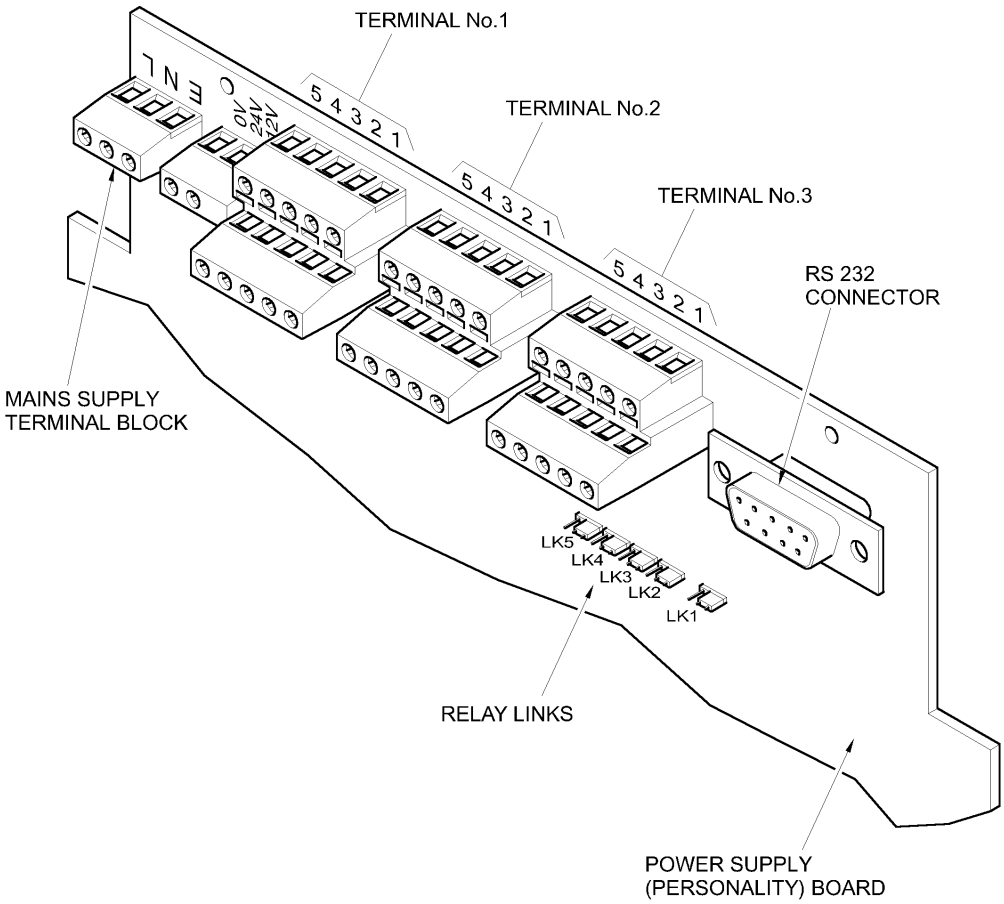

Terminal Connections

TERMINAL 1 TP 4 (Analogue I/O)	TERMINAL 2 TP 5 (Digital Input)	TERMINAL 3 TP 6 (Relay Outputs)
1 Flow	1 Call-to-Service	1 Unit in Service
2 Residual	2 Not currently used	2 Unit in Manual Mode
3 Trim	3 Not currently used	3 Unit Error
4 Remote Set Point	4 High Vacuum	4 High Vacuum Error
5 4 - 20 mA Isolated I O	5 Low Vacuum	5 Low Vacuum Error

Fig 3.1 AVP2 Terminal Blocks

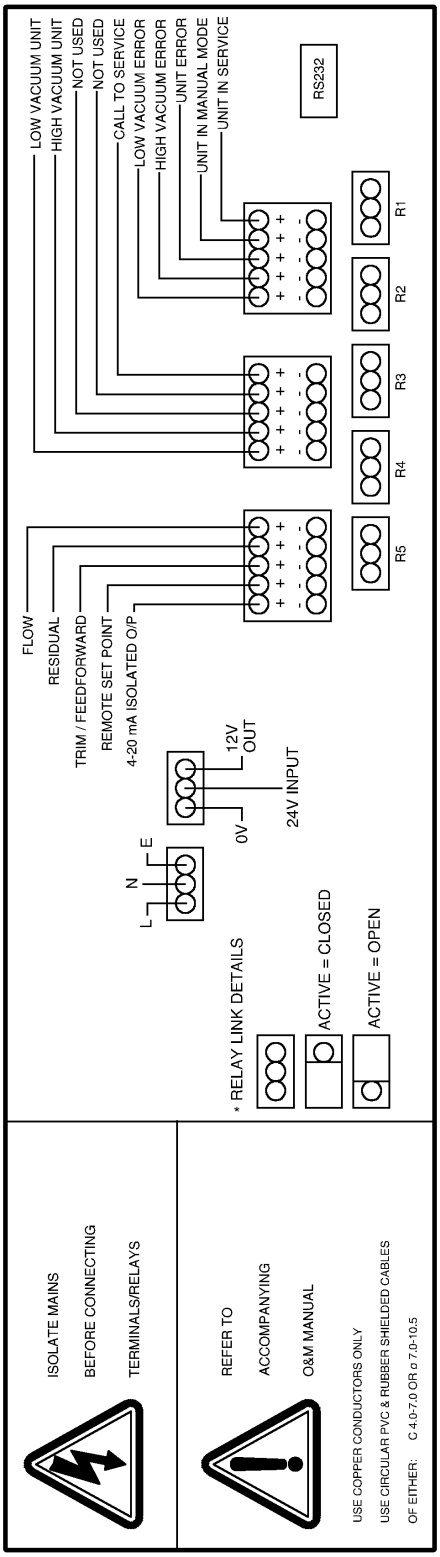

Fig 3.2 Terminal Box Connections Label

3. COMMISSIONING

Before carrying out the commissioning procedures detailed in this Chapter, ensure that installation and setting to work of the associated gas liquid doser equipment has been successfully completed.

3.1 General

The Commissioning procedure is broken down into two stages:

(a) Calibration.
(b) Commissioning.

3.1.1 Calibration

The Calibration procedure sets the control valve position and the indicated gas liquid flow rates to match at:

(a)	Closed	-	Nil Gas liquid.	
(b)	ero flow	-	Nil Gas liquid.	
(c)	20 Open	-	20	of maximum gas liquid flow.
(d)	40 Open	-	40	of maximum gas liquid flow.
(e)	60 Open	-	60	of maximum gas liquid flow.
(f)	80 Open	-	80	of maximum gas liquid flow.
(g)	100 Open	-	100	of maximum gas liquid flow.

3.1.2 Commissioning

The Commissioning procedures can be carried out either:

(a) From the AVP2 Front Panel.
(b) Using an IBM Compatible PC.

Using the AVP2 Front Panel

The Commissioning is carried out by running the menu in the Dosing Unit and supplying the required data via the keys on the AVP2 Front Panel.

Using a PC

The PC is connected to the Dosing Unit using a multi-cable via the RS232 port. The Commissioning is carried out by running the software package installed in the PC to communicate the settings to the Dosing Unit.

3.2 Menu Structure

NOTE:

Refer to the Appendix, which follows the last chapter of this manual, for a breakdown of the Menu Software Family Tree.

The AVP2 Liquid Crystal Display and controls have been integrated to provide an intuitive operating regime for the user. A Main Menu is presented after power-up and self test and this provides access to all subsequent user operations. The Main Menu presents the user with four choices:

```
        MAIN MENU

SET-UP
CALIBRATE
PARAMETER
RUN

                    SELECT
```

When the machine is first powered-up by the user the first entry, SET-UP will be highlighted by the graphics operating sub-system to indicate the first sub-menu to be visited and processed. On correct completion of the SET-UP tasks the system will return the user to the MAIN MENU and the next important sub-menu will be highlighted - CALIBRATE.

This process will continue until all sections have been correctly processed whence the CONTROL sub-menu will remain highlighted.

The AVP2 internal memory will maintain knowledge of all the entered data but subsequent user changes to any data parameter are always allowed.

Layered behind each of the MAIN MENU s sub-headings are all the factors and parameters required to commission and operate the AVP2. The software system maintains knowledge of the Modes of operation and will only display those parameters and options relevant to the selected AVP2 Mode.

In stand-alone operation the Menu system and data entry method is entirely controlled by the 4 pushbuttons provided on the front panel. In all cases the central Cursor buttons (▲ or ▼) move the display selections up and down or increment and decrement a value. The left right buttons perform differing tasks as displayed by the LC screen adjacent to those buttons.

When a parameter has been defined or a selection has been made the right hand button will be used to accept that decision (the LC screen will indicate Accept). The left hand button will be used to move backwards and generally this means return to Main Menu but there are exceptions and the LC screen will indicate the function appropriately.

EXAMPLE OF SET-UP PROCEDURE

NOTE:

The following paragraphs provide an example of a typical Set-Up procedure.

3.3 Set-Up

This sub-menu contains prime overall information relating to the AVP2. To SET-UP the AVP2 carry out the following procedure:

```
        SET-UP

 GAS/LIQUID          Gas
 UNITS            METRIC
 DOSER RANGE     100.00
 CHEMICAL        Cl2

BACK             SELECT
```

GAS LI UID will be highlighted. SELECT the option by pressing the right pushbutton. The following screen will be displayed:

```
 SET-UP CHEMICAL TYPE

 GAS
 LIQUID



BACK             SELECT
```

Press the ▲ or ▼ pushbuttons to highlight either GAS or LI UID and SELECT the option by pressing the right pushbutton. The user is returned to the SET-UP menu.

UNITS will be highlighted. SELECT the option by pressing the right pushbutton. The following screen will be displayed:

```
SET-UP UNITS

 USA
 METRIC Kg/h
 METRIC g/h


BACK              SELECT
```

UNITS METRIC Kg h will be highlighted, SELECT the option by pressing the right pushbutton.

On accepting one of the above, the display will return to the SET-UP screen.

```
          SET-UP

 GAS/LIQUID      Gas
 UNITS           METRIC
 DOSER RANGE     100.00
 CHEMICAL        Cl2

BACK              SELECT
```

Press the ▼ pushbutton to highlight DOSER RANGE. SELECT the option by pressing the right pushbutton.

```
SET-UP DOSER RANGE

ENTER DOSER RANGE
 100.00 kg/h



CHANGE            ACCEPT
```

ACCEPT the option by pressing the right pushbutton, the user will be returned to the SET-UP menu.

If CHANGE is accepted by pressing the left pushbutton, the first figure of the Doser Range number will flash. Press the ▲ or ▼ pushbuttons until the required figure is reached, then ACCEPT the figure by pressing the right pushbutton. The next figure of the Doser Range number will flash. Continue working through the Doser Range number until all required changes have been made. The whole number will then flash, ACCEPT the number by pressing the right pushbutton, the user will be returned to the SET-UP menu.

```
        SET-UP

 GAS/LIQUID     Gas
 UNITS          METRIC
 DOSER RANGE    100.00
 CHEMICAL       Cl2

BACK            SELECT
```

Press the ▼ pushbutton to highlight CHEMICAL. SELECT the option by pressing the right pushbutton.

```
SET-UP CHEMICAL

 CHLORINE
 SULPHUR DIOXIDE
 AMMONIA

BACK            SELECT
```

If, instead of GAS, LI UID had been previously selected in the SET-UP CHEMICAL T PE menu, the following options screen is displayed:

```
SET-UP CHEMICAL

 NaOCl
 NaHSO3

BACK            SELECT
```

Press the ▲ or ▼ pushbuttons to highlight the required chemical. SELECT the option by pressing the right pushbutton. The user will be returned to the SET-UP menu.

```
        SET-UP

GAS/LIQUID
UNITS           METRIC
DOSER RANGE     100.00
CHEMICAL        Cl2
```

THE SET-UP MENU IS COMPLETE.

Press BACK to return to MAIN MENU.

3.4 Calibrate

This section is used to calibrate the valve and servo system and requires the user to undertake some internal AVP2 actions.

Before commencing Calibration, select the first sub-screen (MOVE VALVE) in order to check that the Control Valve can be operated. (ie. The valve is not mechanically seized).

The second SERVO sub-screen will guide the user to set the AVP2 feedback potentiometer to its minimum position (the point just above the end-travel position). The motor will be rotated under control of the Cursor buttons and the LC display will indicate the required action and when the correct position is arrived at.

On depressing the ACCEPT button (Right) the display will return to the CALIBRATE menu.

On selecting the VALVE option calibration of the AVP2 valve assembly is undertaken. The Meter-Tube will be observed by the user and the LC display will instruct the user to set a 0 level on the site tube by use of the Cursor buttons to open close the valve.

NOTE:

It is recommended that the valve is initially opened to get some reading on the sight-tube, say 10-20 , and then reduced to 0 . When achieved the user will select ACCEPT and the calibration point will move to indicate that 20 is now required. This process will continue for 40 , 60 , 80 and 100 . These six points are stored internally by the AVP2 software and linear extrapolation techniques are subsequently applied to fill the gaps .

Once completed the user will press the ACCEPT button and the LC display will return to the CALIBRATE menu.

The VERIF VALVE option once selected will cause the AVP2 to position the valve at its 0 calibrated position and remain there for 10 seconds. After this time the valve will be opened to the 20 position and remain there for 10 seconds. This process will continue up to 100 but in this last case the system will remain in this state until the user depresses the ACCEPT button. Should these values now appear to be incorrect the user should return to the VALVE option and recalibrate.

Once all CALIBRATE activities are completed the ACCEPT button can be depressed and the LC display will return to the MAIN MENU.

3.4.1 Procedure for Calibrate

```
        MAIN MENU

SET-UP
CALIBRATE
PARAMETER
RUN

                    SELECT
```

Press the ▼ pushbutton to highlight CALIBRATE. SELECT the option by pressing the right pushbutton. The user will be asked to select one of the following.

```
        CALIBRATE

 MOVE VALVE
 SERVO
 VALVE
 VERIFY VALVE

BACK            SELECT
```

MOVE VALVE will be highlighted.

Press the right pushbutton to select the MOVE VALVE operation.

Wait for the following sub-screen to be displayed.

```
 MANUALLY MOVE VALVE

USE UP / DOWN TO
MOVE VALVE



BACK            BACK
```

Press the ▲ or ▼ pushbuttons to operate the Control Valve. Check the movement of the valve.

BACK will return the user to the CALIBRATE menu:

```
       CALIBRATE

 MOVE VALVE
 SERVO
 VALVE
 VERIFY VALVE

BACK            SELECT
```

Press the ▼ pushbutton to highlight SERVO.

Press the right pushbutton to select the CALIBRATE SERVO operation.

The following message will be displayed:

```
CALIBRATE SERVO

CAUTION THIS WILL
CHANGE VALVE
CALIBRATION


ABORT           ACCEPT
```

The user will be asked to select ABORT or ACCEPT.

ABORT will return the user to the CALIBRATE menu.

ACCEPT the option by pressing the right pushbutton, the motor will run and the following message will be displayed while the motor is running:

```
CALIBRATE SERVO

 CLOSING VALVE
  PLEASE WAIT



ABORT
```

Wait for the following screen to appear:

```
CALIBRATE SERVO

 VALVE IS NOW CLOSED
 ADJUST POT UNTIL OK

        ==<<<<<<

ABORT
```

To adjust the valve, carry out the following procedure:

WARNING!
The main electrical supply can kill. Some alarm systems are provided with their own power supply at mains voltage which comes to the unit for switching. Check the site installation diagrams and isolate ALL electrical supplies to the Dosing Unit before commencing these procedures.

WARNING!
Only suitably Qualified/Trained personnel should be allowed to work on this equipment.

(1) Locate the four cross-head screws securing the front panel and loosen the screws.

(2) Pull the front cover outwards to allow the panel hinges to slide forward and then swing the panel to the right on the hinges.

(3) Undo the knurled lock screw on the potentiometer retaining ring and rotate the potentiometer body until the display shows the following message:

```
CALIBRATE SERVO

VALVE IS NOW CLOSED
ADJUST POT UNTIL OK

        <OK>

ABORT            ACCEPT
```

(4) Tighten the knurled lock screw.

(5) Close the front panel, pushing it home against the enclosure and tighten the four cross-head retaining screws.

ACCEPT the option by pressing the right pushbutton. The user will be returned to the CALIBRATE menu.

```
      CALIBRATE

SERVO
MOVE VALVE
VALVE
VERIFY VALVE

BACK             SELECT
```

Press the ▲ or ▼ pushbuttons to highlight VALVE.

SELECT the option by pressing the right pushbutton. The user will be asked to select ABORT or CONTINUE.

```
CALIBRATE VALVE

 CAUTION THIS WILL
 CHANGE VALVE
 CALIBRATION


ABORT          CONTINUE
```

ABORT will return the user to the CALIBRATE menu.

CONTINUE by pressing the right pushbutton, the following message will be displayed:

```
    CALIBRATE VALVE

     CLOSING VALVE
      PLEASE WAIT



ABORT
```

Wait for the following screen to be displayed:

```
CALIBRATE VALVE

 OPEN VALVE TO CHECK
 FLOW USING:-
 UP BUTTON (OPEN)


ABORT          CONTINUE
```

Press and hold the ▲ pushbutton until the valve is fully open, the motor will stop running. The user will be asked to ABORT or CONTINUE. Select CONTINUE by pressing the right pushbutton.

```
CALIBRATE VALVE      0%

 CLOSE VALVE UNTIL
 ZERO FLOW IS
 INDICATED


ABORT          CONTINUE
```

ABORT will return the user to the CALIBRATE menu.

Press the ▼ pushbutton until the Flow Tube indicates zero flow then select CONTINUE by pressing the right pushbutton. The user will be asked to ABORT or CONTINUE.

```
CALIBRATE VALVE     20%

 OPEN VALVE UNTIL
 020.00 kg/h
 IS INDICATED


ABORT          CONTINUE
```

ABORT will return the user to the CALIBRATE menu.

Press the ▲ pushbutton until the valve is 20 open, CONTINUE by pressing the right pushbutton. The user will be asked to ABORT or CONTINUE.

```
CALIBRATE VALVE     40%

 OPEN VALVE UNTIL
 040.00 kg/h
 IS INDICATED


ABORT          CONTINUE
```

ABORT will return the user to the CALIBRATE menu.

Press the ▲ pushbutton until the valve is 40 open, CONTINUE by pressing the right pushbutton. The user will be asked to ABORT or CONTINUE.

```
CALIBRATE VALVE     60%

 OPEN VALVE UNTIL
 060.00 kg/h
 IS INDICATED


ABORT          CONTINUE
```

ABORT will return the user to the CALIBRATE menu.

Press the ▲ pushbutton until the valve is 60 open, CONTINUE by pressing the right pushbutton. The user will be asked to ABORT or CONTINUE.

```
CALIBRATE VALVE     80%

 OPEN VALVE UNTIL
 080.00 kg/h
 IS INDICATED


ABORT          CONTINUE
```

ABORT will return the user to the CALIBRATE menu.

Press the ▲ pushbutton until the valve is 80 open, CONTINUE by pressing the right pushbutton. The user will be asked to ABORT or CONTINUE.

```
CALIBRATE VALVE    100%

 OPEN VALVE UNTIL
 100.00 kg/h
 IS INDICATED


ABORT          CONTINUE
```

ABORT will return the user to the CALIBRATE menu.

Press the ▲ pushbutton until the valve is 100 open, CONTINUE by pressing the right pushbutton. The user will be returned to the CALIBRATE menu.

```
        CALIBRATE

 SERVO
 MOVE VALVE
 VALVE
 VERIFY VALVE

BACK            SELECT
```

VERIF VALVE will be highlighted, SELECT the option by pressing the right pushbutton, the motor will run and the following message will be displayed:

```
CALIBRATE VERIFY VALVE

 CAPACITY
 100.00 kg/h
 CLOSING VALVE


ABORT           REPEAT
```

After a 10 second time delay the valve will close and the following screen will appear:

```
CALIBRATE VERIFY VALVE

 CAPACITY
 100.00 kg/h
 VALVE CLOSED


ABORT           REPEAT
```

After a further 10 second time delay the calibration procedure will automatically verify the valve openings at 0 , 20 , 40 , 60 , 80 and 100 . On completion of verification the user will be returned to the CALIBRATE menu.

THE CALIBRATE MENU IS NOW COMPLETE.

Press BACK to return to MAIN MENU.

3.5 Parameter

There are currently seven operating modes available within the AVP2 machine and these will be selectable from the unit s LC display and control buttons or via the PC host software should this be connected via the RS232 communications port.

(a) Flow only ..... Mode 1-Flow.
(b) Residual only ..... Mode 2 CL_2
(c) Residual and Flow ..... Mode 3 CL_2
(d) Flow, Residual and Trim ..... Mode 4 CL_2
(e) Flow and Residual ..... Mode 5 SO_2
(f) Feed-Forward and Flow ..... Mode 6 SO_2-
(g) Feed-Forward, Residual and Flow ..... Mode 7 SO_2

NOTE:
Modes 1 to 4 relate to Chlorine Dosing and Modes 5 to 7 relate to Sulphur Dioxide Dosing.

3.5.1 Flow Only - Mode 1 - Flow

This most basic method of operation allows the AVP2 to operate as a simple FlowPacer product. In operation the Chlorine Dose provided is controlled only by the Flow input and is directly proportional to that input. A Dose percentage value is manually entered by the user and when operating the percentage Dose value will be applied proportionally to the Flow measurement.

For Dose selected as 5 the following Chlorine Doses would result for various Flow inputs:

Flow	Dose
100	5
75	3.75
50	2.5
25	1.25

3.5.2 Residual Only - Mode 2 CL_2

In this Mode an input is taken from a Residual Analyser - such as a Medway unit - which measures the residual level down-stream from the AVP2. An initial Dose value is entered by the operator together with the required Residual level (and a number of other parameters listed below). When operating, the unit will initially output the Dose requested but after a period of time the unit would automatically modify this value in order to achieve the Residual value required.

The following user entered parameters are required:

Dose	Residual Delay Time
Flow rate value	Start-Up delay
Residual range	Remote Residual Range
Desired Residual level	Remote Residual Default
Residual Deadband	Dynamic Conditions

3.5.3 Residual and Flow - Mode 3 - CL_2+

This encompasses both of the above operating Modes and provides an enhanced operating regime especially during start-up but also in environments where the Flow changes frequently.

With Residual only control (Mode 2) the returned residual level is always out of step with the Dose value due to the process lag in gaining that measurement. Mode 3 allows the AVP2 to automatically respond to dynamic Flow changes and should result in smaller residual variations.

The user inputs are identical to Mode 2 (Residual only) with the addition of the Flow factor measurement from Mode 1 (Flow only) plus one variation and one additional term.

The process delay time is also expanded into two values - Trmax and Trmin - to allow the Residual control to be more responsive to Flow rate. Should the user select the correct values for Trmax and Trmin against min and max Flow rates the AVP2 will adjust the process time in accordance with Flow thus resulting in better dynamic control with even smaller resulting residual variations. Should the user select Tmax to be equal to Tmin the AVP2 will maintain a constant process cycle time independent of Flow.

The additional term is Min Flow threshold which sets the Flow point below which the Residual input will be ignored.

The following user entered parameters are required:

Dose	Residual Delay Time
Flow rate value	Min Flow Threshold
Residual range	Remote Residual Range
Desired Residual level	Remote Residual Default
Residual Deadband	Dynamic Conditions
Residual delay max (Trmax)	Residual Delay min (Trmin)

3.5.4 Flow, Residual and Trim - Mode 4 - CL_2++

This mode is a further enhancement to Mode 3 and provides a second Residual measurement taken from even further down-stream than the first Residual measurement point. In operation this should be capable of finer control processing to achieve lower resultant residual levels or more precise control of the required Residual level. This second Residual measurement is named Trim and performs exactly that function.

All of the user parameters from Mode 3 are required together with an additional set for the Trim function.

The following user entered parameters are required:

Dose	Residual Delay Time
Flow rate value	Min Flow Threshold
Residual range	Remote Residual Range
Desired Residual level	Remote Residual Default
Residual Deadband	Dynamic Conditions
Residual delay max (Trmax)	Residual Delay min (Trmin)
Trim range	Desired trim level
Trim Deadband	Trim span
Trim delay max (Ttmax)	Trim delay min (Ttmin)

Whilst the Trim delay can be related to Flow (Ttmax and Ttmin) the process delay used by the AVP2 before the Trim input is acted upon will always be set to Ttmax. This is logical because the authority on overall Dose control provided by the Trim input will always be much smaller than that provided by the prime residual input.

3.5.5 Flow and Residual - Mode 5 - SO_2+

This SO_2 Mode operates with all the features of Mode 3 (CL_2) but the processing algorithms provide a reverse sense of operation. The aim of this machine is to reduce the level of Chlorine currently present by the addition of SO_2 and hence the more Chlorine measured by the residual Analyser the more SO_2 is required to be added.

The following user entered parameters are required:

Dose	Residual Delay Time
Flow rate value	Min Flow Threshold
Residual range	Remote Residual Range
Desired Residual level	Remote Residual Default
Residual Deadband	Dynamic Conditions
Residual delay max (Trmax)	Residual Delay min (Trmin)

3.5.6 Feed Forward and Flow - Mode 6 - SO_2

This mode differs from all others yet discussed in that a Chlorine Analyser is located ahead of the AVP2 Doser unit. Hence the quantity of Chlorine currently measured is passed forward to the SO_2 Doser which modifies the Dose selected by the user as a result of this, advanced, CL_2 measurement. The Flow term provides a proportional factor to the resultant Dose level in the same way as Mode 1 and 2.

The following user entered parameters are required:

Dose	User defined Site specific
Maximum Flow	User defined Site specific
Minimum Flow	User defined Site specific
Flow Dynamics	Dynamic conditions
Feed-Fwd Range	User defined Site specific
Feed-Fwd Dynamics	Dynamic conditions
Feed-Fwd Factor	Scaling factor

3.5.7 Feed Forward, Residual and Flow - Mode 7 - SO_2++

This mode continues from Mode 6 above with the addition of a Residual Analyser measurement taken down-stream. The AVP2 SO_2 Doser is then sandwiched between two Chlorine measurement sources and should result in better CL_2 residual control and dynamic behaviour. An additional set of user parameters are required.

The following user entered parameters are required:

Dose	User defined Site specific
Maximum Flow	User defined Site specific
Minimum Flow	User defined Site specific
Flow Dynamics	Dynamic conditions
Target Residual	User defined Site specific
Maximum Delay	User defined Site specific
Minimum Delay	User defined Site specific
Residual Deadband	User defined Site specific
Feed-Fwd Range	User defined Site specific
Feed-Fwd Dynamics	Dynamic conditions
Feed-Fwd Factor	Scaling factor

On entering this sub-menu the display will indicate the seven possible modes of operation.

Once all PARAMETER activities are completed the ACCEPT button can be depressed and the LC screen will return to the MAIN MENU.

EXAMPLE OF PARAMETER SETTING

The following screens are examples of DOSER MODE options, they show one option, the others are shown in detail in Chapter 4 - Operating Instructions.

```
        MAIN MENU

SET-UP
CALIBRATE
PARAMETER
RUN

                    SELECT
```

Press the ▼ pushbutton to highlight PARAMETER. SELECT the option by pressing the right pushbutton. The user will be asked to select one of the following.

```
        PARAMETER

 DOSER MODE        FLOW
 EDIT PARAMETERS
 ERROR CONTROL


BACK              SELECT
```

DOSER MODE will be highlighted, SELECT the option by pressing the right pushbutton. The user will be asked to select one of the following.

```
 PARAMETER DOSER MODE

 FLOW
 RESIDUAL
 FLOW+RESIDUAL
 FLOW+RESIDUAL+TRIM

BACK              SELECT
```

Press the ▼ pushbutton to highlight EDIT PARAMETERS. SELECT the option by pressing the right pushbutton. The following screen will be displayed:

```
 PARAMETER EDIT FLOW

 DOSE            150%



BACK            SELECT
```

SELECT the option by pressing the right pushbutton. The user will be asked to select one of the following.

```
 PARAMETER FLOW FLOW

 %DOSE            150%
 MAX FLOW        0500
 DYNAMICS FACTOR    6


BACK            SELECT
```

DOSE will be highlighted, SELECT the option by pressing the right pushbutton. The user will be asked to CHANGE or ACCEPT the dose.

```
SET-UP  %   DOSE

ENTER   %   DOSE

 150    %


CHANGE          ACCEPT
```

ACCEPT the option by pressing the right pushbutton, the user will be returned to the PARAMETER FLOW FLOW menu.

If CHANGE is accepted by pressing the left pushbutton, the first figure of the Dose number will flash. Press the ▲ or ▼ pushbuttons until the required figure is reached, then ACCEPT the figure by pressing the right pushbutton. The next figure of the Dose number will flash. Continue working through the Dose number until all required changes have been made. The whole number will then flash, ACCEPT the number by pressing the right pushbutton, the user will be returned to the PARAMETER FLOW FLOW menu.

```
 PARAMETER FLOW FLOW

% DOSE          150%
MAX FLOW        0500
DYNAMICS FACTOR    6


BACK            SELECT
```

Press the ▼ pushbutton to highlight MAX FLOW. SELECT the option by pressing the right pushbutton. The following screen will be displayed:

```
SET-UP FLOW RANGE

ENTER FLOW RANGE

 0500 m3/h


CHANGE          ACCEPT
```

ACCEPT the option by pressing the right pushbutton, the user will be returned to the PARAMETER FLOW FLOW menu.

If CHANGE is accepted by pressing the left pushbutton, the first figure of the Flow Range number will flash. Press the ▲ or ▼ pushbuttons until the required figure is reached, then ACCEPT the figure by pressing the right pushbutton. The next figure of the Flow Range number will flash. Continue working through the Flow Range number until all required changes have been made. The whole number will then flash, ACCEPT the number by pressing the right pushbutton, the user will be returned to the PARAMETER FLOW FLOW menu.

```
 PARAMETER FLOW FLOW

%DOSE            150%
MAX FLOW         0500
DYNAMICS FACTOR    6


BACK            SELECT
```

Press the ▼ pushbutton to highlight D NAMICS FACTOR. SELECT the option by pressing the right pushbutton. The following screen will be displayed:

```
SET-UP FLOW DYNAMICS

ENTER FLOW DYNAMICS

 6


CHANGE           ACCEPT
```

If CHANGE is accepted by pressing the left pushbutton, the Flow Dynamics number will flash. Press the ▲ or ▼pushbuttons until the required number is reached, (between 1 and 9) then ACCEPT the number by pressing the right pushbutton. The user will be returned to the PARAMETER FLOW FLOW menu.

ACCEPT the option by pressing the right pushbutton, the user will be returned to the PARAMETER FLOW FLOW menu.

Press the left pushbutton TWICE to return to the PARAMETER menu.

```
        PARAMETER

DOSER MODE
EDIT PARAMETERS
ERROR CONTROL


CHANGE           ACCEPT
```

Press the ▼ pushbutton to highlight ERROR CONTROL. SELECT the option by pressing the right pushbutton. The following screen will be displayed:

```
     ERROR CONTROL

 VACUUM UNIT
 VALVE FAILURE
 CONTROL FAILURE
 SYSTEM FAILURE     OFF

BACK              SELECT
```

Details of the above options and the meanings of displayed error messages are given in Chapter 4.

3.6 RUN

This final MAIN MENU option is entered when the AVP2 is required to be activated or otherwise and also contains the basic AVP2 s other control options.

The first three options when selected undertake their prime task. In STANDB mode the screen merely indicates this status. In MANUAL the valve can be controlled by the Cursor keys and the display will indicate this together with valve position data. In AUTOMATIC the display will indicate Dose levels and other data.

The final option allows the user to close the valve.

The screens, when required, will also display the function of the right and left pushbuttons.

On returning to the MAIN MENU from any position, the AVP2 is put into the idle state whereby the valve is frozen at its current position and no inputs or outputs will be processed with the exception of instructions and data to from a PC (if connected) via the RS232 communications port.

Press the ▼ pushbutton to highlight RUN. SELECT the option by pressing the right pushbutton.

```
        MAIN MENU

SET-UP
CALIBRATE
PARAMETER
RUN

                   SELECT
```

```
            RUN

 STANDBY
 MANUAL
 AUTOMATIC
 CLOSE VALVE

BACK              SELECT
```

STANDB will be highlighted, SELECT the option by pressing the right pushbutton. The following message will be displayed:

```
       OPERATION

 ABOUT TO ENTER
 STANDBY MODE

 ARE YOU SURE

NO                  YES
```

The user will be asked to select NO or ES

Pressing the left pushbutton will select NO and return the user to the CONTROL menu.

Accept the ES option by pressing the right pushbutton, the user will be asked to select MENU:

```
      STANDBY MODE

 PRESS FOR
 MENU
 10 Secs


MENU                MENU
```

Wait for the following screen to appear:

```
      STANDBY MODE

 CLOSING VALVE
 DOSER MODE FLOW



MENU
```

When the valve is closed the following screen will appear.

```
      STANDBY MODE

 DOSER MODE FLOW



MENU
```

Accept the MENU option by pressing the left pushbutton, the user will be returned to the RUN menu.

```
            RUN

 STANDBY
 MANUAL
 AUTOMATIC
 CLOSE VALVE

BACK            SELECT
```

Press the ▼ pushbutton to highlight MANUAL. SELECT the option by pressing the right pushbutton, the user will be asked to select NO or ES.

```
        OPERATION

 ABOUT TO ENTER
 MANUAL MODE

 ARE YOU SURE?

NO                  YES
```

NO will return the user to the RUN menu.

Accept the ES option by pressing the right pushbutton.

The following screen will be displayed:

```
      MANUAL MODE

 PRESS FOR
 MENU
 10 Secs


MENU            MENU
```

After a 10 second delay, the unit will enter the MANUAL MODE. If the user wishes to abort this operation, select MENU to return to the MAIN MENU.

After a short time delay the following screen will appear:

```
 MANUAL MODE        /

 000%
 USE UP / DOWN TO
 ADJUST VALVE
MENU            DETAIL
```

Press the ▲ or ▼ pushbuttons to adjust the Control Valve.

During operation, a rotating will be displayed in the top right hand corner of the screen to indicate that the unit is operating. This rotating symbol is called a watchdog .

Manual Detail Screen

The Manual Detail Screen, selected by pressing the right pushbutton, will display current control parameters for the chosen mode, such as Flow, Residual Level, Percentage Dose etc. The form of this screen is similar to the Detail Screen for the Automatic Modes. A sample screen is shown below:

```
     MANUAL MODE F + R

 TARGET RESID    5.00mg
 RESIDUAL        4.90mg
 DOSE = 89%
 FLOW = 150 l/h

MENU               MAIN
```

Accept the MENU option by pressing the left pushbutton, the user will be asked to select NO or ES.

```
        WARNING

 ABOUT TO LEAVE
 MANUAL MODE

 ARE YOU SURE

NO                 YES
```

NO will return the user to the MANUAL MODE menu.

Accept the ES option by pressing the right pushbutton the user will be asked for a PASSWORD. To enter the password (a four digit number), carry out the following procedure:

```
    ENTER PASSWORD

 TO LEAVE MODE

         0000


 ABORT          ACCEPT
```

The left hand 0 will flash, move ▲ or ▼ pushbuttons to input correct first digit and press the right pushbutton to accept.

The second 0 will flash. Input the correct second digit by moving the ▲ or ▼ pushbuttons and press the right hand pushbutton to accept.

The third 0 will flash. Input the correct third digit by moving the ▲ or ▼ pushbuttons and press the right hand pushbutton to accept.

The fourth 0 will flash. Input the correct fourth digit by moving the ▲ or ▼ pushbuttons and press the right hand pushbutton to accept. The password installation is now complete.

The wrong password will produce the message INCORRECT PASSWORD and after a short delay the screen will return the user to the mode of operation.

NOTE:

The default PASSWORD is factory set on supply delivery. This default setting can be changed using a PC connected via the RS232 connection.

The correct password will produce the RUN menu:

```
          RUN

 STANDBY
 MANUAL
 AUTOMATIC
 CLOSE VALVE

BACK            SELECT
```

Press the ▼ pushbutton to highlight AUTOMATIC. SELECT the option by pressing the right pushbutton, the user will be asked to select NO or ES.

```
       OPERATION

 ABOUT TO ENTER
 AUTOMATIC MODE

 ARE YOU SURE?

NO                 YES
```

NO will return the user to the RUN menu.

```
    AUTOMATIC FLOW

 PRESS FOR
 MENU
 10 Secs


MENU                MENU
```

After a short time delay the following screen will appear:

```
    AUTOMATIC FLOW    /

  000%
    Flow = 0000 m3/h

MENU            DETAIL
```

MENU will allow the user to leave AUTOMATIC MODE.

Accept the DETAIL option by pressing the right pushbutton, the user will be given the following detail.

```
    AUTOMATIC FLOW

 Dose = 200%
 Max Flow = 1000 m³/h
 10 Secs


MENU                MAIN
```

MAIN will return the user to the previous screen.

Accept the MENU option by pressing the left pushbutton. The user will be warned that he is about to leave AUTOMATIC MODE and asked for a PASSWORD.

```
        WARNING

 ABOUT TO LEAVE
 AUTOMATIC MODE

 ARE YOU SURE?

NO                    YES
```

Selecting NO will return the user to the previous menu.

Selecting ES will ask for the PASSWORD (a four digit number). Proceed as follows:

```
    ENTER PASSWORD

 TO LEAVE MODE

         0000


 ABORT          ACCEPT
```

The left hand 0 will flash, move ▲ or ▼ pushbuttons to input correct first digit and press the right pushbutton to accept.

The second 0 will flash. Input the correct second digit by moving the ▲ or ▼ pushbuttons and press the right hand pushbutton to accept.

The third 0 will flash. Input the correct third digit by moving the ▲ or ▼ pushbuttons and press the right hand pushbutton to accept.

The fourth 0 will flash. Input the correct fourth digit by moving the ▲ or ▼ pushbuttons and press the right hand pushbutton to accept.

Press the right hand pushbutton to accept the password.

The wrong password will produce the message INCORRECT PASSWORD and after a short delay the screen will return the user to the mode of operation.

NOTE:

The default PASSWORD is factory set on supply delivery. This default setting can be changed using a PC connected via the RS232 connection.

The correct password will produce the following screen:

```
        WARNING

 ABOUT TO LEAVE
 AUTOMATIC MODE

 ARE YOU SURE

NO                  YES
```

NO will return the user to the last menu.

Accept the ES option by pressing the right pushbutton the user will be returned to the RUN menu.

```
           RUN

 STANDBY
 MANUAL
 AUTOMATIC
 CLOSE VALVE

BACK              SELECT
```

Press the ▼ pushbutton to highlight CLOSE VALVE and press the right hand pushbutton to select the CLOSE VALVE operation.

The AVP2 Unit will now close the Control Valve, the screen will display the message CLOSING VALVE and the motor will run. The screen will revert to the above menu on completion.

Press BACK to return to MAIN MENU.

3.7 Control Loop Algorithms

The preference for the Loop Algorithms is to define a single equation whose terms express all of the possible Modes of operation and which can be modified by truncation or sign changes.

The form shown below is the generic equation derived and is presented in the form used for Flow proportional Residual and Trim - Mode 4 CL2

$$V_t \quad \mathbf{C_1}\, V_{T-1} \times \frac{F_T}{F_{T-1}} \quad - \left(\mathbf{C_2} \quad A_R - R_R \quad D_1 \frac{F_T}{F_{T-2}} \right) - \left(\mathbf{C_3} \quad A_T - R_T \quad D_2 \quad \frac{F_T}{F_{T-3}} \right)$$

Term 1 Term 2 Term 3

Where: V_t is the new valve position at time zero (now).
V_{t-1} is the valve position at the previous sample.
F_t is the current Flow value.
F_{t-1} Is the Flow value at the previous sample.
F_{t-2} is the Flow level at the time in the past that the Residual sample was valid.
F_{t-3} is the Flow level at the time in the past that the Trim sample was valid.
The $\mathbf{C_x}$ operator allows each of the major terms be included (C_x 1) or removed (C_x 0) or the polarity of the term to be reversed (C_X -1).

Term 1 relates to the Flow proportional factors where only flow provides dynamic changes in Valve position. Note the Dose term has been omitted for clarity and is just a factor applied to the Flow term F .

Term 2 is the Residual factor and contains the difference between the Actual Residual level A_R and the Required Residual level R_R. The term D_1 is the dynamics factor.

Term 3 is the Trim factor and contains the difference between the Actual Trim level A_T and the Required Trim level R_T. The term D_2 is the dynamics factor.

Additionally, Terms 2 and 3 have limits applied to them. These limits are set by User input and include Residual Range, Deadband and Trim Range and Deadband. Other limits include Min Flow Threshold and in this particular case is applicable to all Terms.

3.8 Terms and Definitions

Dose:	Initial value set by the user and the actual value being applied during operating conditions.
Flow rate:	An AVP2 input whose range is defined by the user to correlate maximum flow to maximum Input Value (either at 20mA or 10mA).
Residual range:	An AVP2 input whose range is defined by the user to correlate maximum Residual level to maximum Input value (either at 20mA or 10mA).
Desired Residual level:	Residual Set-Point value which is a user specified parameter.
Residual Deadband:	Band within which no valve changes occur due to residual error and is presented as a percentage and CL_2 SO_2 quantity.
Residual Delay Time:	Time delay due to down-stream Residual Analyser. This is the process cycle time. This can have two values Trmax and Trmin and if set differently, the process cycle time will vary between Trmax and Trmin as a linear function of Flow rate. Note, if the Flow term is fixed as in Mode 2 Trmax and Trmin become the same value and the Menu information will indicate one time value only.
Start-Up delay:	The number of process cycles before Residual operation commences.
Remote Residual Range:	An optional method of changing the Desired Residual Range and arriving via a current input port. The relationship between input current and residual Range must be pre-established by the user.
Min Flow Threshold:	A Low Flow threshold below which no further valve positional changes will occur.
Trim range:	An AVP2 input whose range is defined by the user to correlate maximum Trim level to maximum Input Value (either at 20mA or 10mA).

Desired Trim level:	Trim Set-Point value which is a user specified parameter.
Trim Deadband:	Band within which no valve changes occur due to Trim error and is presented as a percentage and CL_2 SO_2 quantity.
Trim Delay Time:	Time delay due to down-stream Trim Analyser. This can have two values Ttmax and Ttmin and if set differently, the loop processing times will vary between Ttmax and Ttmin as a linear function of Flow rate.
Feed Forward range (F Fwd):	An AVP2 input whose range is defined by the user to correlate maximum F Fwd level to maximum Input value (either at 20mA or 10mA).
Desired F Fwd level:	F Fwd Set-Point value which is a user specified parameter.
F Fwd Deadband:	Band within which no valve changes occur due to F Fwd error and is presented as a percentage and CL_2 SO_2 quantity.
Defaults:	All user specified values have pre-set Default values.
Dynamic Conditions:	A factor entered by the user to set the dynamic behaviour of the system. The factor values are set between 1 and 10 with number 10 leading to the most dynamic operation and number 1 providing a highly damped result.
Flow Dynamics Factor:	This user selected value acts as a filter for the flow signal input to the unit. It allows the AVP2 FPC2 unit to filter the noise associated with the flow signal with the following settings:

1	Maximum Filter	6	
2		7	
3		8	
4		9	Minimum Filter
5	Default Value		

Residual & Trim Dynamics Factor

This user selected value acts as a gain valve. It allows the AVP2 FPC2 unit to correct the valve position in response to a change in the residual level, by making the following changes:

1	20	of error removed (correction) in one process cycle time.
2	30	(as above).
3	40	(as above).
4	50	(as above).
5	60	(as above).
6	70	(as above).
7	80	(as above).
8	90	(as above).
9	100	(as above).

Feed Forward Factor

This user selected value acts as a scaling factor. It allows the AVP2 unit to correct the valve position in response to a change in the Feed Forward Residual level, by making the following changes:

1 Minimum adjustment in response to Feed-Fwd input signal.

↓

100 Provides an effective adjustment of 1:1 in response to Feed-Fwd input signal.

↓

500 Maximum adjustment in response to Feed-Fwd input signal.

Chapter 4

Operating Instructions

Contents

Para.		Page
	INTRODUCTION	**4.3**
1.	**GENERAL**	**4.5**
2.	**MENU OVERVIEW**	**4.5**
	EXAMPLE OF PARAMETER CHANGING PROCEDURE	**4.6**
3.	**PARAMETER**	**4.6**
3.1	Residual	4.6
3.2	Error Control	4.17
3.2	Flow Residual	4.25
3.3	Flow Residual Trim	4.25

ILLUSTRATIONS

Fig. No.		Page
4.1	AVP2 Unit (General View)	4.4

TABLES

Table No.		Page
4.1	Error Displays and Meanings	4.22

INTRODUCTION

This Chapter gives procedures for operating the Automatic Valve Positioner 2 (AVP2) only. Refer to the specific Operating and Maintenance Manual for complete operating instructions for the Dosing Unit.

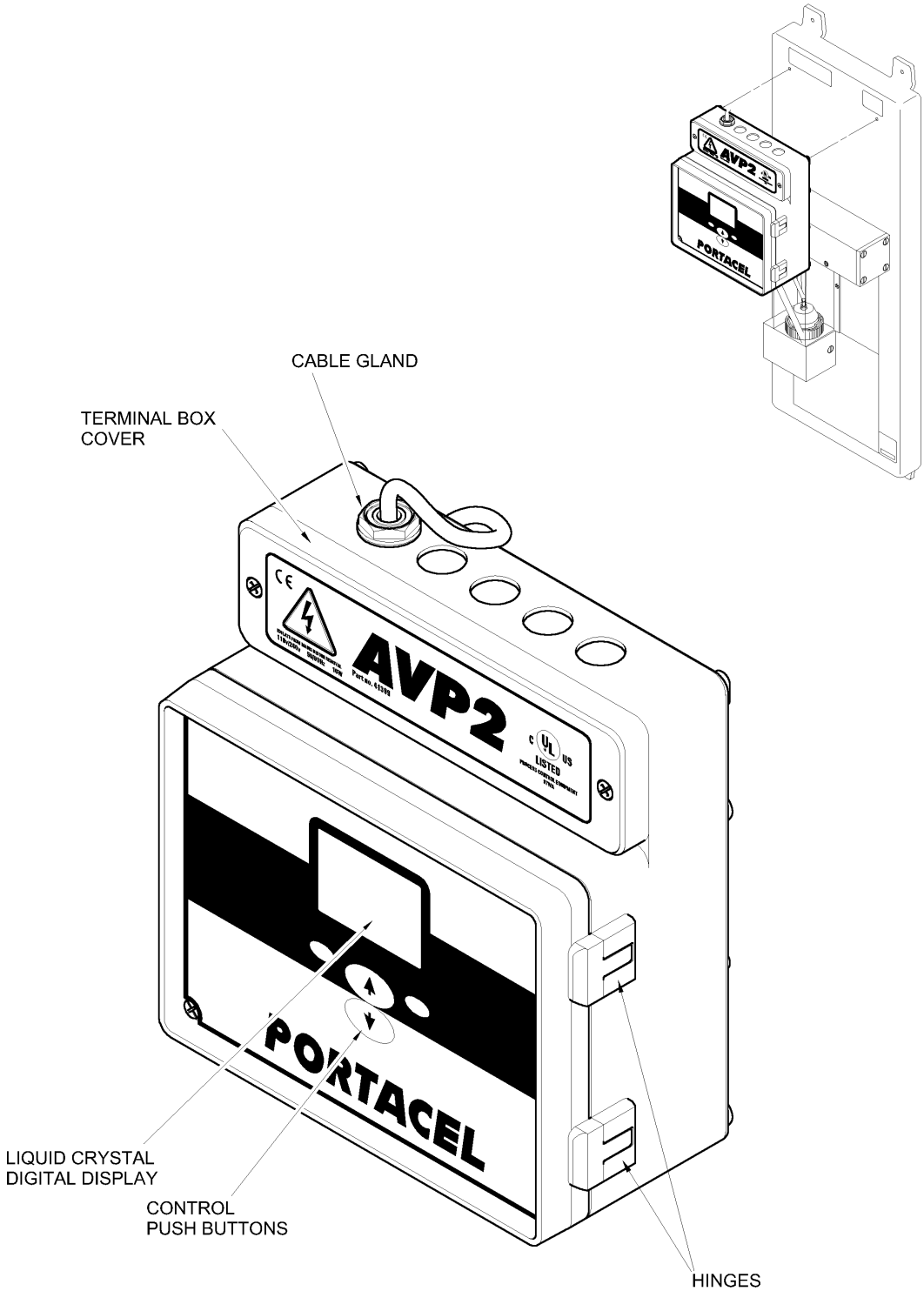

Fig 4.1 AVP2 Unit (General View)

1. GENERAL

The Dosing Units are designed to operate automatically once they have been calibrated and commissioned (see Chapter 3). This Chapter will deal with the operation of the unit assuming that calibration and commissioning have been carried out at installation and details an overview of the menus, options and parameters available at the display and control panel.

Included is specific information about menus and items that must not be entered and changed unless the operator is fully trained and aware of the consequences of the actions to be taken.

Later in the Chapter are detailed procedures listing the actions to be taken to change certain parameters.

2. MENU OVERVIEW

All the menus required to maintain the unit in operation can be carried out at the AVP Front Panel of a Master Dosing Unit. The menu structure contains seven main headings. Some of the main headings have further sub-menus that can be entered.

When the unit is first switched on the software in the AVP will load all the data and parameters stored at calibration and commissioning and begin operation in the mode being used when the unit was last shut-down. The steps to this mode are automatic and the operator will not be required to enter any other data.

If the Operator is required to enter other menus pressing the left hand pushbutton will send the software of the unit back to one of the main headings. From this heading pressing the ▼ pushbutton will move down through the other main headings, at the other main headings pressing the right hand pushbutton will enter any available sub-menus and pressing the left hand pushbutton repeatedly will return the software to the MAIN MENU.

The main menus that can be entered are:

(a) Set-Up.
(b) Calibrate.
(c) Parameter.
(d) Run.

The Set-Up, Calibrate and an overview of the Parameter menus have been dealt with in Chapter 3. The remainder of the Parameter menus are detailed as follows:

EXAMPLE OF PARAMETER CHANGING PROCEDURE

NOTE:
The following paragraphs provide an example of a typical Parameter setting-up procedure.

3. PARAMETER

```
        MAIN MENU

SET-UP
CALIBRATE
PARAMETER
RUN

                    SELECT
```

Press the ▼ pushbutton to highlight PARAMETER. SELECT the option by pressing the right pushbutton. The user will be asked to select one of the following:

```
        PARAMETER

 DOSER MODE         FLOW
 EDIT PARAMETERS
 ERROR CONTROL

BACK          SELECT
```

DOSER MODE will be highlighted. SELECT the option by pressing the right pushbutton. The user will be asked to select one of the following:

3.1 Residual

```
  PARAMETER DOSER MODE

 FLOW
 RESIDUAL
 FLOW+RESIDUAL
 FLOW+RESIDUAL+TRIM

BACK          SELECT
```

Press the ▼ pushbutton to highlight RESIDUAL. SELECT the option by pressing the right pushbutton. The user will be asked to select one of the following:

```
        PARAMETER

 DOSER MODE          RESD
 EDIT PARAMETERS
 ERROR CONTROL

BACK          SELECT
```

DOSER MODE RESD will be highlighted. Press the ▼ pushbutton to highlight EDIT PARAMETERS. SELECT the option by pressing the right pushbutton. The following screen will be displayed:

```
   PARAMETER EDIT RESD

 DOSE                150%
 RESIDUAL          25.00



BACK          SELECT
```

DOSE will be highlighted, SELECT the option by pressing the right pushbutton. The user will be asked to select one of the following:

```
   PARAMETER FLOW RESD

 %DOSE               150%
 MAX FLOW            2000
 FLOW VALUE           9999



BACK                SELECT
```

DOSE will be highlighted, SELECT the option by pressing the right pushbutton. The user will be asked to CHANGE or ACCEPT the dose.

```
SETUP    %    DOSE

ENTER    %    DOSE

 150%


CHANGE              ACCEPT
```

ACCEPT the option by pressing the right pushbutton, the user will be returned to the PARAMETER FLOW RESD menu.

If CHANGE is selected by pressing the left pushbutton, the first figure of the DOSE number will flash. Press the ▲ or ▼ pushbuttons until the required figure is reached, then ACCEPT the figure by pressing the right pushbutton. The second figure of the DOSE number will flash. Continue working through the DOSE number until all required changes have been made. The whole number will then flash, ACCEPT the number by pressing the right pushbutton, the user will be returned to the PARAMETER FLOW RESD menu.

```
   PARAMETER FLOW RESD

 %DOSE                150%
 MAX FLOW            2000
 FLOW VALUE          1500


BACK          SELECT
```

DOSE will be highlighted. Press the ▼ pushbutton to highlight MAX FLOW. SELECT the option by pressing the right pushbutton. The following screen will be displayed:

```
    SETUP FLOW RANGE

 ENTER FLOW RANGE

 2000  m3/h


CHANGE             ACCEPT
```

ACCEPT the option by pressing the right pushbutton, the user will be returned to the PARAMETER FLOW RESD menu.

If CHANGE is selected by pressing the left pushbutton, the first figure of the FLOW RANGE number will flash. Press the ▲ or ▼ pushbuttons until the required figure is reached, then ACCEPT the figure by pressing the right pushbutton. The second figure of the FLOW RANGE number will flash. Continue working through the FLOW RANGE number until all required changes have been made. The whole number will then flash, ACCEPT the number by pressing the right pushbutton, the user will be returned to the PARAMETER FLOW RESD menu.

```
  PARAMETER FLOW RESD

 %DOSE              150%
 MAX FLOW          2000
 FLOW VALUE        1500


BACK          SELECT
```

FLOW VALUE will be highlighted. SELECT the option by pressing the right pushbutton. The following screen will appear.

```
 SETUP FLOW VALUE

 ENTER FLOW VALUE

 1500 m3/h


CHANGE            ACCEPT
```

ACCEPT the option by pressing the right pushbutton, the user will be returned to the PARAMETER FLOW RESD menu.

If CHANGE is accepted by pressing the left pushbutton, the first figure of the FLOW VALUE number will flash. Press the ▲ or ▼ pushbuttons until the

required figure is reached, then ACCEPT the figure by pressing the right pushbutton. The next figure of the FLOW VALUE number will flash. Continue working through the FLOW VALUE number until all required changes have been made. The whole number will then flash, ACCEPT the number by pressing the right pushbutton, the user will be returned to the PARAMETER FLOW RESD menu.

Press the left pushbutton to return to the EDIT PARAMETER menu.

The following screen will appear:

```
PARAMETER EDIT RESD

DOSE                150%
RESIDUAL          25.00



BACK          SELECT
```

Press the ▼ pushbutton to highlight RESIDUAL, SELECT the option by pressing the right pushbutton. The user will be asked to select one of the following:

```
PARAMETER RESID RESD

CONTROL
SETUP



BACK          SELECT
```

CONTROL will be highlighted, SELECT the option by pressing the right pushbutton. The user will be asked to select one of the following:

```
RESIDUAL CNTRL RESD

TARGET RESID.     99.99
MAX DELAY           255s
MIN DELAY           255s
DYNAMICS FACTOR 2

BACK          SELECT
```

TARGET RESID will be highlighted, SELECT the option by pressing the right pushbutton. The following screen will appear:

```
SETUP TARGET RESIDUAL

ENTER TARGET RESIDUAL

 25.00 mg/l


CHANGE            ACCEPT
```

ACCEPT the option by pressing the right pushbutton, the user will be returned to the RESIDUAL CONTROL RESD menu.

If CHANGE is selected by pressing the left pushbutton, the first figure of the TARGET RESIDUAL number will flash. Press the ▲ or ▼ pushbuttons until the required figure is reached, then ACCEPT the figure by pressing the right pushbutton. The second figure of the TARGET RESIDUAL number will flash. Continue working through the TARGET RESIDUAL number until all required changes have been made. The whole number will then flash. ACCEPT the number by pressing the right pushbutton, the user will be returned to the RESIDUAL CONTROL RESD menu.

```
   RESIDUAL CNTRL RESD

 TARGET RESID.    99.99
 MAX DELAY         255s
 MIN DELAY         255s
 DYNAMICS FACTOR 2

BACK          SELECT
```

Press the ▼ pushbutton to highlight MAX DELA , SELECT the option by pressing the right pushbutton. The following screen will appear:

```
SETUP MAX DELAY

ENTER MAX DELAY

 255 secs


CHANGE            ACCEPT
```

ACCEPT the option by pressing the right pushbutton, the user will be returned to the RESIDUAL CONTROL RESD menu.

If CHANGE is selected by pressing the left pushbutton, the first figure of the MAX DELA number will flash. Press the ▲ or ▼ pushbuttons until the required figure is reached, then ACCEPT the figure by pressing the right pushbutton. The second figure of the MAX DELA number will flash. Continue working through the MAX DELA number until all required changes have been made. The whole number will then flash, ACCEPT the number by pressing the right pushbutton, the user will be returned to the RESIDUAL CONTROL RESD menu.

```
   RESIDUAL CNTRL RESD

 TARGET RESID.    99.99
 MAX DELAY         255s
 MIN DELAY          255s
 DYNAMICS FACTOR 2

BACK         SELECT
```

MAX DELA will be highlighted. Press the ▼ pushbutton to highlight MIN DELA , SELECT the option by pressing the right pushbutton. The following screen will appear:

```
SETUP MIN DELAY

ENTER MIN DELAY

 255 secs


CHANGE            ACCEPT
```

ACCEPT the option by pressing the right pushbutton, the user will be returned to the RESIDUAL CONTROL RESD menu.

If CHANGE is selected by pressing the left pushbutton, the first figure of the MIN DELA number will flash. Press the ▲ or ▼ pushbuttons until the required figure is reached, then ACCEPT the figure by pressing the right pushbutton. The second figure of the MIN DELA number will flash. Continue working through the MIN DELA number until all required changes have been made. The whole number will then flash, ACCEPT the number by pressing the right pushbutton, the user will be returned to the RESIDUAL CONTROL RESD menu.

```
  RESIDUAL CNTRL RESD

TARGET RESID.    99.99
MAX DELAY         255s
MIN DELAY         255s
DYNAMICS FACTOR 2

BACK         SELECT
```

Press the ▼ pushbutton to highlight D NAMICS FACTOR, SELECT the option by pressing the right pushbutton. The following screen will appear:

```
SET UP RESID. DYNAMICS

ENTER RESID. DYNAMICS

 2


CHANGE            ACCEPT
```

ACCEPT the option by pressing the right pushbutton, the user will be returned to the RESIDUAL CONTROL RESD menu.

If CHANGE is selected by pressing the left pushbutton, the first figure of the RESIDUAL D NAMICS number will flash. Press the ▲ or ▼ pushbuttons until

the required figure is reached, (0 to 9) then ACCEPT the figure by pressing the right pushbutton TWICE, the user will be returned to the RESIDUAL CONTROL RESD menu.

Press the left pushbutton, the user will be returned to the PARAMETER RESID RESD menu.

```
  PARAMETER RESID RESD

 CONTROL
 SETUP



BACK          SELECT
```

CONTROL will be highlighted. Press the ▼ pushbutton to highlight SET UP, SELECT the option by pressing the right pushbutton. The user will be asked to select one of the following:

```
  RESIDUAL SET UP RESD

RESIDUAL RANGE    08.00
DEADBAND         99.99
START UP CYCLES       9


BACK          SELECT
```

RESIDUAL RANGE will be highlighted, SELECT the option by pressing the right pushbutton. The following screen will appear:

```
SETUP RESIDUAL RANGE

ENTER RESID RANGE

 08.00 mg/l


CHANGE            ACCEPT
```

ACCEPT the option by pressing the right pushbutton, the user will be returned to the RESIDUAL SET UP RESD menu.

If CHANGE is selected by pressing the left pushbutton, the first figure of the RESIDUAL RANGE number will flash. Press the ▲ or ▼ pushbuttons until the required figure is reached, then ACCEPT the figure by pressing the right pushbutton. The second figure of the RESIDUAL RANGE number will flash. Continue working through the RESIDUAL RANGE number until all required changes have been made. The whole number will then flash, ACCEPT the number by pressing the right pushbutton, the user will be returned to the RESIDUAL SET-UP RESD menu.

```
  RESIDUAL SET UP RESD

RESIDUAL RANGE    08.00
DEADBAND         99.99
START UP CYCLES       9


BACK         SELECT
```

RESIDUAL RANGE will be highlighted. Press the ▼ pushbutton to highlight DEADBAND, SELECT the option by pressing the right pushbutton. The user will be asked to select one of the following:

```
SETUP RESID. DEADBAND

ENTER RESID. DEADBAND

 99.99 mg/l


CHANGE           ACCEPT
```

ACCEPT the option by pressing the right pushbutton, the user will be returned to the RESIDUAL SET-UP RESD menu.

If CHANGE is selected by pressing the left pushbutton, the first figure of the RESIDUAL DEADBAND number will flash. Press the ▲ or ▼ pushbuttons until the required figure is reached, then ACCEPT the figure by pressing the right

pushbutton. The second figure of the RESIDUAL DEADBAND number will flash. Continue working through the RESIDUAL DEADBAND number until all required changes have been made. The whole number will then flash, ACCEPT the number by pressing the right pushbutton, the user will be returned to the RESIDUAL SET-UP RESD menu.

```
  RESIDUAL SET UP RESD

RESIDUAL RANGE    08.00
DEADBAND         99.99
START UP CYCLES       1


BACK         SELECT
```

Press the ▼ pushbutton to highlight START-UP C CLES, SELECT the option by pressing the right pushbutton. The user will be asked to select one of the following:

```
SETUP RESID. START UP

ENTER RESID. START UP

 1 cyc


CHANGE           ACCEPT
```

ACCEPT the option by pressing the right pushbutton, the user will be returned to the RESIDUAL SET UP RESD menu.

If CHANGE is selected by pressing the left pushbutton, the RESIDUAL START UP number (0 - 9) will flash. Press the ▲ or ▼ pushbuttons until the required figure is reached, then ACCEPT the figure by pressing the right pushbutton, the user will be returned to the RESIDUAL SET UP RESD menu.

Press the left pushbutton THREE TIMES to return to the PARAMETER menu.

3.2 Error Control

```
        PARAMETER

 DOSER MODE         F+R
 EDIT PARAMETERS
 ERROR CONTROL


BACK         SELECT
```

Press the ▼ pushbutton to highlight ERROR CONTROL and SELECT the option by pressing the right pushbutton. The user will be asked to select one of the following:

```
      ERROR CONTROL

 VACUUM UNIT
 VALVE FAILURE
 CONTROL FAILURE
 SYSTEM FAILURE       ON

BACK          SELECT
```

SELECT the VACUUM UNIT option by pressing the right pushbutton. The user will be presented with the following options:

```
   VACUUM UNIT CONTROL

 HIGH ALARM           ON
 LOW ALARM            ON



BACK          SELECT
```

Press the ▲ or ▼ pushbuttons until the required ALARM is highlighted, then SELECT the alarm by pressing the right pushbutton. If HIGH ALARM is selected, the user will be presented with the following screen:

```
          SETUP
       HIGH VACUUM

HIGH VACUUM          OFF



ABORT             ACCEPT
```

Press the ▲ or ▼ pushbuttons to toggle ON or OFF status.

Repeat the procedure for LOW VACUUM ALARM.

Press the left pushbutton. The user will be returned to the ERROR CONTROL menu.

```
      ERROR CONTROL

 VACUUM UNIT
 VALVE FAILURE
 CONTROL FAILURE
 SYSTEM FAILURE       ON

BACK          SELECT
```

VACUUM UNIT will be highlighted. Press the ▼ pushbutton to highlight VALVE FAILURE and SELECT the option by pressing the right pushbutton. The user will be presented with the following options:

```
    VALVE FAIL CONTROL

 MOTOR/VALVE FAIL     OFF
 UNABLE TO CLOSE      OFF



BACK          SELECT
```

Press the ▲ or ▼ pushbuttons until the required option is highlighted, then SELECT the option by pressing the right pushbutton.

```
          SETUP
      VALVE FAILURE

VALVE FAILURE        OFF



ABORT             ACCEPT
```

Press the σ or τ pushbuttons to toggle ON or OFF status.

Repeat the procedure for UNABLE TO CLOSE option.

Press the left pushbutton. The user will be returned to the ERROR CONTROL menu.

```
      ERROR CONTROL

 VACUUM UNIT
 VALVE FAILURE
 CONTROL FAILURE
 SYSTEM FAILURE       ON

BACK          SELECT
```

VALVE FAILURE will be highlighted. Press the ▼ pushbutton to highlight CONTROL FAILURE and SELECT the option by pressing the right pushbutton. The user will be presented with the following options:

```
     CONTROL FAILURE

 LOSS OF SIGNAL       OFF
 SET POINT FAIL       OFF



BACK          SELECT
```

Press the ▲ or ▼ pushbuttons until the required option is highlighted, then SELECT the option by pressing the right pushbutton.

```
          SETUP
     SIGNAL FAILURE

SIGNAL FAILURE       OFF



ABORT             ACCEPT
```

Press the ▲ or ▼ pushbuttons to toggle ON or OFF status.

Repeat the procedure for SET POINT FAIL option.

Press the left pushbutton. The user will be returned to the ERROR CONTROL menu.

```
      ERROR CONTROL

 VACUUM UNIT
 VALVE FAILURE
 CONTROL FAILURE
 SYSTEM FAILURE       ON

BACK          SELECT
```

CONTROL FAILURE will be highlighted. Press the ▼ pushbutton to highlight S STEM FAILURE and SELECT the option by pressing the right pushbutton. The user will be presented with the following options:

```
          SET UP
      SYSTEM FAILURE

 SYSTEM FAILURE      OFF



ABORT             ACCEPT
```

Press the ▲ or ▼ pushbuttons to toggle ON or OFF status.

Press the ▲ or ▼ pushbuttons until the required option (ON or OFF) is displayed, then SELECT the option by pressing the right pushbutton.

The user will be returned to the ERROR CONTROL menu.

```
      ERROR CONTROL

 VACUUM UNIT
 VALVE FAILURE
 CONTROL FAILURE
 SYSTEM FAILURE       ON

BACK          SELECT
```

Press the left pushbutton TWICE to return to the MAIN MENU.

Error Display Screen

Whenever an enabled error is detected, an ERROR DISPLA screen is presented identifying the failure s. For example:

```
**    SYSTEM ERROR     **
**      DETECTED       **

    HIGH VACUUM ALARM
     SYSTEM OFF LINE


ABORT            RESTART
```

Pressing the left pushbutton to select ABORT will abort the current run mode and return the user to the menus (via the PASSWORD entry screen).

Selecting the right pushbutton to RESTART will clear the displayed error screen and attempt to restart the system.

Refer to Table 4.1 for details of Error Displays and Meanings.

Table 4.1 Error Displays and Meanings

Displayed Error	Meaning
High Vacuum Alarm	Control Unit has detected a high vacuum within the Vacuum Switch. The problem may be associated with any of the following: (a) No chemical supply (empty cylinder or tank). (b) Isolation valve shut somewhere within the system upstream of the Dosing Unit.
Low Vacuum Alarm	Control Unit has detected a low vacuum within the Vacuum Switch. The problem may be associated with any of the following: (a) Broken or ruptured pipework. (b) Isolation valve shut somewhere within the system downstream of the Dosing Unit.
Valve Motor Failure	Control Unit has detected a problem with the operation of either the Control Valve or the Motor gearbox Assembly. The problem may be associated with any of the following: (a) Loose wire connections on the Motor. (b) Loose wire connections on the Potentiometer. (c) A failure of the Potentiometer Unit. (d) The Potentiometer clamping ring has become loose. (e) The stall current of the Motor gearbox has been exceeded. (f) The drive shaft may be broken (separated from the torsion rod).

Continued

Table 4.1 Error Displays and Meanings (continued)

Valve Close Failure	Control Unit has detected a problem in closing the valve. The problem may be associated with any of the following: (a) The valve has seized. (b) The drive shaft may be broken (separated from the torsion rod).
Loss of Signal	The unit has detected that any of the active 4-20mA signals is out-of-range (ie zero). The problem may be associated with any of the following: (a) Loose connections in terminal blocks. (b) Loss damage of Flow Signal. (c) Loss damage of Residual Signal. (d) Loss damage of Trim Signal.
Set Point Failure	The unit could not achieve the target set point within ten (10) process times at a constant flow. The problem may be associated with any of the following: (a) Fluctuating or unstable Flow Signal. (b) Flow Signal could not stabilise within ten (10) process cycle times. (c) The Flow Dynamics value is too severe, reduce the flow value using the Parameter Flow Flow menu.

Continued

Table 4.1 Error Displays and Meanings (continued)

System Failure	There is a failure within the Computer (Core Module) Board of the AVP2 controller itself. The problem may be associated with any of the following: (a) RAM error. (b) EEPROM failure. (c) Check-sum failure. (d) Physical damage to the Computer (Core Module) Board.

3.2 Flow + Residual

From the MAIN menu select PARAMETER and then FLOW RESIDUAL. Work through the FLOW RESIDUAL screens in the same manner as the RESIDUAL screens shown in the previous section.

3.3 Flow + Residual + Trim

From the MAIN menu select PARAMETER and then FLOW RESIDUAL TRIM from the DOSER MODE sub-menu. Select EDIT PARAMETERS and work through the FLOW RESIDUAL TRIM screens as before but include the following additional screens.

```
 PARAMETER TRIM   F+R+T

 CONTROL
 SETUP



BACK          SELECT
```

Press the right pushbutton to select CONTROL. The following screen will appear:

```
TRIM CONTROL F+R+T

 TARGET TRIM  5.00
 MAX DELAY        255m
 MIN DELAY        255m
 DYNAMICS FACTOR 1

BACK          SELECT
```

TARGET TRIM will be highlighted, SELECT the option by pressing the right pushbutton. The following screen will appear.

```
SET UP TARGET TRIM

ENTER TARGET TRIM

 5.00 mg/l


CHANGE             ACCEPT
```

ACCEPT the option by pressing the right pushbutton, the user will be returned to the TRIM CONTROL F R T menu.

If CHANGE is selected by pressing the left pushbutton, the first figure of the TARGET TRIM number will flash. Press the ▲ or ▼ pushbuttons until the required figure is reached, then ACCEPT the figure by pressing the right pushbutton. The second figure of the TARGET TRIM number will flash. Continue working through the TARGET TRIM number until all required changes have been made. The whole number will then flash, ACCEPT the number by pressing the right pushbutton, the user will be returned to the TRIM CONTROL F R T menu.

```
TRIM CONTROL F+R+T

 TARGET TRIM 5.00%
 MAX DELAY          255m
 MIN DELAY          255m
 DYNAMICS FACTOR  1

BACK          SELECT
```

Press the ▼ pushbutton to highlight MAX DELA , SELECT the option by pressing the right pushbutton. The following screen will appear.

```
SET UP MAX DELAY

ENTER MAX DELAY

 255 mins


CHANGE            ACCEPT
```

ACCEPT the option by pressing the right pushbutton, the user will be returned to the TRIM CONTROL F R T menu.

If CHANGE is selected by pressing the left pushbutton, the first figure of the MAX DELA number will flash. Press the ▲ or ▼ pushbuttons until the required figure is reached, then ACCEPT the figure by pressing the right pushbutton. The second figure of the MAX DELA number will flash. Continue working through the MAX DELA number until all required changes have been made. The whole number will then flash, ACCEPT the number by pressing the right pushbutton, the user will be returned to the TRIM CONTROL F R T menu.

```
TRIM CONTROL        F+R+T

 TARGET TRIM 5.00
 MAX DELAY           255m
 MIN DELAY           255m
 DYNAMICS FACTOR 1

BACK              SELECT
```

Press the ▼ pushbutton to highlight MIN DELA , SELECT the option by pressing the right pushbutton. The following screen will appear.

```
SETUP MIN DELAY

ENTER MIN DELAY

 255 mins


CHANGE            ACCEPT
```

ACCEPT the option by pressing the right pushbutton, the user will be returned to the TRIM CONTROL F R T menu.

If CHANGE is selected by pressing the left pushbutton, the first figure of the MIN DELA number will flash. Press the ▲ or ▼ pushbuttons until the required figure is reached, then ACCEPT the figure by pressing the right pushbutton. The next figure of the MIN DELA number will flash. Continue working through the MIN DELA number until all required changes have been made. The whole number will then flash, ACCEPT the number by pressing the right pushbutton, the user will be returned to the TRIM CONTROL F R T menu.

```
TRIM CONTROL        F+R+T

 TARGET TRIM 5.00
 MAX DELAY           255s
 MIN DELAY           255s
 DYNAMICS FACTOR

BACK          SELECT
```

Press the ▼ pushbutton to highlight D NAMICS FACTOR, SELECT the option by pressing the right pushbutton. The following screen will appear.

```
SETUP TRIM DYNAMICS

ENTER TRIM DYNAMICS

 1


CHANGE            ACCEPT
```

ACCEPT the option by pressing the right pushbutton, the user will be returned to the TRIM CONTROL F R T menu.

If CHANGE is selected by pressing the left pushbutton, the first figure of the RESIDUAL D NAMICS number will flash. Press the ▲ or ▼ pushbuttons until the required figure is reached, (1 to 9) then ACCEPT the figure by pressing the right pushbutton, the user will be returned to the TRIM CONTROL F R T menu.

Press the left pushbutton FOUR times, the user will be returned to the MAIN MENU.

From the MAIN menu select PARAMETER and then FLOW RESIDUAL TRIM from the DOSER MODE sub-menu. Select EDIT PARAMETERS and work through the FLOW RESIDUAL TRIM screens as before but include the following additional screens.

```
PARAMETER TRIM      F+R+T

 CONTROL
 SETUP



BACK          SELECT
```

CONTROL will be highlighted. Press the ▼ pushbutton to highlight SETUP, press the right pushbutton to select the option. The following screen will appear:

```
TRIM SET UP          F+R+T

 TRIM RANGE           5.00
 DEADBAND            08.00
 START UP CYCLES 2
 TRIM LIMIT           001%

BACK          SELECT
```

TRIM RANGE will be highlighted, SELECT the option by pressing the right pushbutton. The following screen will appear.

```
SETUP TRIM RANGE

ENTER TRIM RANGE

5.00 mg/l


CHANGE              ACCEPT
```

ACCEPT the option by pressing the right pushbutton, the user will be returned to the TRIM SET UP F R T menu.

If CHANGE is selected by pressing the left pushbutton, the first figure of the TRIM RANGE number will flash. Press the ▲ or ▼ pushbuttons until the required figure is reached, then ACCEPT the figure by pressing the right pushbutton. The second figure of the TRIM RANGE number will flash. Continue working through the TRIM RANGE number until all required changes have been made. The whole number will then flash, ACCEPT the number by pressing the right pushbutton, the user will be returned to the TRIM SET UP F R T menu.

```
TRIM SET UP         F+R+T

 TRIM RANGE           5.00
 DEADBAND            08.00
 START UP CYCLES  2
 TRIM LIMIT           001%

BACK          SELECT
```

Press the ▼ pushbutton to highlight DEADBAND, SELECT the option by pressing the right pushbutton. The following screen will appear.

```
SETUP TRIM DEADBAND

ENTER TRIM DEADBAND

 08.00 mg/l


CHANGE            ACCEPT
```

ACCEPT the option by pressing the right pushbutton, the user will be returned to the TRIM SET UP F R T menu.

If CHANGE is selected by pressing the left pushbutton, the first figure of the TRIM DEADBAND number will flash. Press the ▲ or ▼ pushbuttons until the required figure is reached, then ACCEPT the figure by pressing the right pushbutton. The second figure of the TRIM DEADBAND number will flash. Continue working through the TRIM DEADBAND number until all required changes have been made. The whole number will then flash, ACCEPT the number by pressing the right pushbutton, the user will be returned to the TRIM SET UP F R T menu.

```
TRIM SET UP         F+R+T

 TRIM RANGE          5.00
 DEADBAND           08.00
 START UP CYCLES 2
 TRIM LIMIT          001%

BACK          SELECT
```

Press the ▼ pushbutton to highlight START UP C CLES, SELECT the option by pressing the right pushbutton. The following screen will appear:

```
SETUP TRIM START UP

ENTER TRIM START UP

 2 cyc


CHANGE            ACCEPT
```

ACCEPT the option by pressing the right pushbutton, the user will be returned to the TRIM SET UP F R T menu.

If CHANGE is selected by pressing the left pushbutton, the TRIM START UP number will flash. Press the ▲ or ▼ pushbuttons until the required figure is reached (0 - 9), then ACCEPT the figure by pressing the right pushbutton TWICE. The user will be returned to the TRIM SET UP F R T menu.

```
TRIM SET UP        F+R+T

 TRIM RANGE         5.00
 DEADBAND          08.00
 START UP CYCLES 2
 TRIM LIMIT         001%

BACK         SELECT
```

Press the ▼ pushbutton to highlight TRIM LIMIT, SELECT the option by pressing the right pushbutton. The following screen will appear.

```
SETUP TRIM LIMIT

ENTER TRIM LIMIT

 001%


CHANGE           ACCEPT
```

ACCEPT the option by pressing the right pushbutton, the user will be returned to the TRIM SET UP F R T menu.

If CHANGE is selected by pressing the left pushbutton, the first figure of the TRIM LIMIT number will flash. Press the ▲ or ▼ pushbuttons until the required figure is reached, then ACCEPT the figure by pressing the right pushbutton. The second figure of the TRIM LIMIT number will flash. Continue working through the TRIM LIMIT number until all required changes have been made. The whole number will then flash, ACCEPT the number by pressing the right pushbutton, the user will be returned to the TRIM SET UP F R T menu.

Press the left pushbutton FOUR times, the user will be returned to the MAIN MENU.

Chapter 5

Maintenance Procedures

Contents

Para.		Page
	INTRODUCTION	**5.3**
1.	**GENERAL**	**5.5**
2.	**REMOVAL AND REPLACEMENT**	**5.5**
2.1	Motor gearbox Assembly	5.5
2.1.1	Removal Procedure	5.6
2.1.2	Replacement Procedure	5.7
2.2	Power Supply (Personality) Board	5.7
2.2.1	Removal Procedure	5.8
2.2.2	Replacement Procedure	5.9
2.3	Computer (Core Module) Board	5.10
2.3.1	Removal Procedure	5.10
2.3.2	Replacement Procedure	5.11
2.4	AVP2 Unit	5.12
2.4.1	Removal Procedure	5.12
2.4.2	Replacement Procedure	5.13
3.	**FAULT FINDING**	**5.14**
3.1	Checking Cable Connections	5.14
3.1.1	Internal Multi-Cable Connector	5.14
3.1.2	Terminal Box Connections	5.15
3.2	Checking the Fuse	5.15
3.3	Error Messages	5.16
4.	**SPARE PARTS**	**5.20**

ILLUSTRATIONS

Fig. No.		Page
5.1	AVP2 Unit	5.17
5.2	Motor gearbox Assembly	5.18
5.3	AVP2 Unit and Control Valve	5.19

(Continued)

Contents (continued)

TABLES

Table		Page
5.1	AVP2 Part Numbers	5.20
5.2	Motor gearbox Assembly Part Numbers	5.21
5.3	AVP2 Unit and Control Valve Part Numbers	5.21

INTRODUCTION

This Chapter gives the procedures for maintaining the Automatic Valve Positioner AVP2 only. Refer to the specific Operating and Maintenance Manual for complete maintenance instructions for the Dosing Unit.

1. GENERAL

WARNING!
Only suitably Qualified/Trained personnel should be allowed to work on this equipment.

WARNING!
The main electrical supply can kill. Some alarm systems are provided with their own power supply at mains voltage which comes to the unit for switching. Check the site installation diagrams and isolate ALL electrical supplies to the Dosing Unit before commencing these procedures.

WARNING!
The gas used can cause serious injury. The system must be purged of all gas before the equipment is dismantled.

Maintenance is restricted to the checking of the items mentioned in this chapter and the repair by replacement of the main items listed in Chapter 6. The Safety precautions mentioned in this chapter and in the Safety Section of the Dosing Unit Operating and Maintenance Manual must be carried out at all times.

2. REMOVAL AND REPLACEMENT

2.1 Motor/gearbox Assembly

WARNING!
Only suitably Qualified/Trained personnel should be allowed to work on this equipment.

WARNING!
The gas used can cause serious injury. For the safety precautions required refer to the gas manufacturers data sheets and the site operating instructions.

WARNING!
The gas used can cause serious injury. The system must be purged of all gas before the equipment is dismantled.

WARNING!
The main electrical supply can kill. Some alarm systems are provided with their own power supply at mains voltage which comes to the unit for switching. Check the site installation diagrams and isolate ALL electrical supplies to the Dosing Unit before commencing these procedures.

2.1.1 Removal Procedure (see Figs 5.1 and 5.3)

NOTE:

When removing items of the Motor gearbox Assembly it is essential to note the orientation of control arms and drive shafts to assist in the replacement procedure. To remove the Motor gearbox Assembly carry out the following:

(1) Switch off the ejector and isolate all electrical supplies to the AVP2 Unit (see Warning above).

(2) Loosen the four cross-head screws (Fig 5.1) on the AVP2 Font Panel, pull the panel forward and hinge open.

NOTE:

The 9V PP3 battery must be in position to provide a driving voltage for the motor to be moved in Step (3) below.

(3) Using the ▲ or ▼ keys on the Front Panel, move the Control Valve drive shaft to locate the grub screws (Fig 5.3, item 3) into a convenient position for removal.

(4) Using a 2.5mm hexagonal key remove and retain the two grub screws (Fig 5.3 item 3) securing the Motor gearbox Assembly to the drive shaft.

(5) Disconnect the 5-pin free electrical socket connecting the Motor gearbox Assembly to the 5 pins marked JP1 at the right centre of the Power Supply (Personality) Board.

(6) Using an 8mm ring spanner remove and retain the two nuts and washers (Fig 5.1) which secure the Motor gearbox mount to the Control Valve.

(7) Remove the Motor gearbox Assembly (including mount) from the AVP2 by carefully but firmly separating the Motor gearbox from the Control Valve drive shaft.

2.1.2 Replacement Procedure (see Figs 5.1, 5.2 and 5.3)

NOTE:

When replacing the Motor gearbox Assembly ensure that the items are replaced in the correct orientation as noted during removal.

To replace the Motor gearbox Assembly:

(1) Place the Motor gearbox Assembly into position aligning the drive shaft.

(2) Reconnect the 5-pin free electrical socket onto the 5-pins marked JP1 located at the right centre of the Power Supply (Personality) Board ensuring correct orientation.

(3) Secure the Motor gearbox to the AVP2 with the two nuts and washers retained in the removal procedure Step (5) using an 8mm ring spanner.

(4) Replace the two grub screws retained in the removal procedure Step (4) using a 2.5 mm hexagonal key. Operate the ▲ or ▼keys on the Front Panel to move the drive shaft to locate the holes for the grub screws into a convenient position for replacement.

(5) Close and secure the AVP2 Front Panel.

(6) Carry out the Calibration Procedure (see Chapter 3).

2.2 Power Supply (Personality) Board

WARNING!
Only trained personnel should dismantle any assemblies.

WARNING!
The gas used can cause serious injury. For the safety precautions required refer to the gas manufacturers data sheets and the site operating instructions.

WARNING!
The system must be purged of all gas before the equipment is dismantled.

WARNING!
The main electrical supply can kill. Some alarm systems are provided with their own power supply at mains voltage which comes to the unit for switching. Check the site installation diagrams and isolate ALL electrical supplies to the Dosing Unit before commencing these procedures.

NOTE:

When removing items, note the orientation to assist in the replacement procedure.

2.2.1 Removal Procedure (see Fig 5.1)

To remove the Power Supply (Personality) Board proceed as follows:

(1) Switch off the ejector and isolate all electrical supplies to the unit (see Warning above).

(2) Loosen the four cross-head screws (Fig 5.1) on AVP2 Front Panel, pull the panel forward and hinge open.

(3) Remove the Motor gearbox Assembly (see Paragraph 2.1.1).

WARNING!
The main electrical supply can kill. Some alarm systems are provided with their own power supply at mains voltage which comes to the unit for switching. Check the site installation diagrams and isolate ALL electrical supplies to the Dosing Unit before commencing these procedures.

(4) Loosen the two cross-head screws which secure the Terminal Box cover and remove the cover.

(5) Disconnect the power supply cable and alarm connections from the terminal blocks, noting the position of each connection.

(6) Remove the 60-way ribbon connector from the right-hand side of the Power Supply (Personality) Board.

(7) Using a cross-head screwdriver, remove and retain the eight cross-headed screws retaining the Power Supply (Personality) Board in the AVP2 enclosure.

(8) Carefully remove the Power Supply (Personality) Board from the enclosure by tilting it free from the Terminal Box area.

2.2.2 Replacement Procedure (see Fig 5.1)

To replace the Power Supply (Personality) Board, proceed as follows:

NOTE:

When replacing the Power Supply (Personality) Board ensure that the items are replaced in the correct orientation as noted during removal.

(1) Place the Power Supply (Personality) Board into the AVP2 enclosure and secure with the eight cross-headed screws retained in the removal procedure Step (7).

(2) Reconnect the 60-way ribbon connector to the right-hand side of the Power Supply (Personality) Board.

WARNING!
The main electrical supply can kill. Some alarm systems are provided with their own power supply at mains voltage which comes to the unit for switching. Check the site installation diagrams and isolate ALL electrical supplies to the Dosing Unit before commencing these procedures.

(3) Replace the Power Supply cable and Alarm connections to the positions noted in the removal procedure Step (5) and in conjunction with the label printed inside the Terminal Box cover.

(4) Replace the Terminal Box cover.

(5) Replace the Motor gearbox Assembly (see Paragraph 2.1.2).

(6) Close and secure the AVP2 Front Panel.

(7) Carry out the Calibration Procedure (see Chapter 3).

2.3 Computer (Core Module) Board

WARNING!
Only trained personnel should dismantle any assemblies.

WARNING!
The gas used can cause serious injury. For the safety precautions required refer to the gas manufacturers data sheets and the site operating instructions.

WARNING!
The system must be purged of all gas before the equipment is dismantled.

WARNING!
The main electrical supply can kill. Some alarm systems are provided with their own power supply at mains voltage which comes to the unit for switching. Check the site installation diagrams and isolate ALL electrical supplies to the Dosing Unit before commencing these procedures.

2.3.1 Removal Procedure

NOTE:

When removing items, note the orientation to assist in the replacement procedure.

To remove the Computer (Core Module) Board carry out the following:

(1) Switch off the ejector and isolate all electrical supplies to the unit (see Warning above).

(2) Loosen the four cross-head screws (Fig 5.1) on the AVP2 Front Panel, pull the panel forward and hinge open.

CAUTION!

The Computer (Core Module) Board contains devices that are sensitive to Electro-Static Discharge (ESD). Do not touch the circuits whilst handling or unpacking, ensure that the equipment is grounded and always use an ESD wrist strap connected to a ground connection when handling the board.

(3) Disconnect the 60-way ribbon cable connector from the Power Supply (Personality) Board.

(4) Using a 5mm open-ended spanner remove and retain the four nuts securing the Computer (Core Module) Board to the inside of the Front Panel.

(5) Gently remove the Computer (Core Module) Board from the securing posts and carefully disconnect the keypad connection from the back of the board.

(6) Place the Computer (Core Module) Board in an anti-static bag for protection.

2.3.2 Replacement Procedure

NOTE:

When replacing the Computer (Core Module) Board make sure that the items are replaced in the correct positions as noted during removal.

CAUTION!	The Computer (Core Module) Board contains devices that are sensitive to Electro-Static Discharge (ESD). Do not touch the circuits whilst handling or unpacking, ensure that the equipment is grounded and always use an ESD wrist strap connected to a ground connection when handling the board.

To replace the Computer (Core Module) Board:

(1) Connect the keypad connector to the position noted in the removal procedure Step (5) on the back of the Computer (Core Module) Board.

(2) Place the board on the securing posts and secure with the four nuts removed in Step (4). Ensure that the keypad connector does not become trapped between the Liquid Crystal Display and the Front Cover.

(3) Replace the 60-way ribbon connector removed in Step (3) to the Power Supply (Personality) Board.

(4) Close and secure the AVP2 Front Panel.

(5) Carry out the Set-up, Calibration and Commissioning Procedures (refer to Chapters 2 and 3).

2.4 AVP2 UNIT

WARNING!
Only trained personnel should dismantle any assemblies.

WARNING!
The gas used can cause serious injury. For the safety precautions required refer to the gas manufacturers data sheets and the site operating instructions.

WARNING!
The system must be purged of all gas before the equipment is dismantled.

WARNING!
The main electrical supply can kill. Some alarm systems are provided with their own power supply at mains voltage which comes to the unit for switching. Check the site installation diagrams and isolate ALL electrical supplies to the Dosing Unit before commencing these procedures.

NOTE:

When removing the AVP2 Unit from a Dosing Unit, note the orientation of all parts to assist in the replacement procedure.

2.4.1 Removal Procedure

To remove the AVP2 Unit from a Dosing Unit, proceed as follows:

(1) Switch off the ejector and isolate all electrical supplies to the unit (see Warning above).

(2) Loosen the four cross-head screws (Fig 5.1) on the AVP2 Front Panel, pull the panel forward and hinge open.

(3) Remove the Motor gearbox Assembly (see Paragraph 2.1.1).

WARNING!
The main electrical supply can kill. Some alarm systems are provided with their own power supply at mains voltage which comes to the unit for switching. Check the site installation diagrams and isolate ALL electrical supplies to the Dosing Unit before commencing these procedures.

(4) Loosen the two cross-head screws which secure the Terminal Box cover and remove the cover.

(5) Disconnect the power supply cable and alarm connections from the terminal blocks, noting the position of each connection.

(6) Remove the two screws securing the AVP2 Unit to the Doser Unit.

(7) Lift the AVP2 Unit clear of the studs in the Control Valve and remove the AVP2 from the Doser Unit.

2.4.2 Replacement Procedure

(1) Locate the AVP2 Unit over the studs in the Control Valve and position the AVP2 Unit onto the Doser Unit.

(2) Replace the two screws securing the AVP2 Unit to the Doser Unit and tighten into position.

WARNING!
The main electrical supply can kill. Some alarm systems are provided with their own power supply at mains voltage which comes to the unit for switching. Check the site installation diagrams and isolate ALL electrical supplies to the Dosing Unit before commencing these procedures.

(3) Replace the Power Supply cable and Alarm connections to the positions noted in the removal procedure Step (5) and in conjunction with the label printed inside the Terminal Box cover.

(4) Replace the Terminal Box cover.

(5) Replace the Motor gearbox Assembly (see Paragraph 2.1.2).

(6) Close and secure the AVP2 Front Panel.

(7) Carry out the Set-up, Calibration and Commissioning Procedures (refer to Chapters 2 and 3).

3. FAULT FINDING

The following procedures represent a selection of the main checks that can be carried out.

NOTE:

In the event of a main power supply failure, the motor is powered by a 9V PP3 battery and controlled by pressing the ▼ keypad pushbutton to produce clockwise motion and the ▲ keypad pushbutton to produce counter-clockwise motion. This action may be required to close the Control Valve and stop the dosing operation.

3.1 Checking Cable Connections

3.1.1 Internal Multi-Cable Connector (See Figure 5.1)

There is one multi-cable connector inside the AVP2 enclosure - the 60-way ribbon cable. One end of the connector is soldered to the Computer (Core Module) Board whilst the other is plugged into the Power Supply (Personality) Board. To check the connector:

(1) Switch off the AVP2 at the mains supply.

WARNING!
The main electrical supply can kill. Some alarm systems are provided with their own power supply at mains voltage which comes to the unit for switching. Check the site installation diagrams and isolate ALL electrical supplies to the Dosing Unit before commencing these procedures.

(2) Loosen the four cross-head screws (Fig 5.1) on the AVP2 Front Panel, pull the panel forward and hinge open.

(3) Check that the cable run is correct and that the connector is properly in place and held secure by the connector clips.

(4) Replace the front cover making sure that the cable is not pinched or stretched in any way.

(5) Tighten the four retaining screws.

3.1.2 Terminal Box Connections (See Figure 3.2)

(1) Switch off the AVP2 at the mains supply.

WARNING!
The main electrical supply can kill. Some alarm systems are provided with their own power supply at mains voltage which comes to the unit for switching. Check the site installation diagrams and isolate ALL electrical supplies to the Dosing Unit before commencing these procedures.

(2) Open the upper part of the enclosure that comprises the Terminal Box by removing the two cross-head retaining screws (Fig 5.4) and the cover.

(6) Check that cables in the Terminal Box are in their correct terminals (see Chapter 3, Fig 3.2), and secured tightly in position.

(7) Replace the Terminal Box cover and tighten the two cross-head retaining screws.

3.2 Checking the Fuse

(1) Switch off the AVP2 at the mains supply.

WARNING!
The main electrical supply can kill. Some alarm systems are provided with their own power supply at mains voltage which comes to the unit for switching. Check the site installation diagrams and isolate ALL electrical supplies to the Dosing Unit before commencing these procedures.

(2) Loosen the four cross-head screws (Fig 5.1) on the AVP2 Front Panel, pull the panel forward and hinge open.

(3) Locate the protective fuse cover (Fig 5.1 item 6) at the upper left-hand area of the Power Supply (Personality) Board (Fig 5.1 item 8).

(4) Remove and retain the two screws holding the fuse cover.

(5) The fuse is located directly beneath the protective fuse cover in the upper, left hand corner of the Power Supply (Personality) Board.

(6) Remove the fuse, check and discard if faulty.

(7) Replace a faulty fuse with a new one. Check that the part number is correct as detailed in Paragraph 4 - (Spare Parts) of this chapter.

(8) The fuse is replaced by pressing it into the spring clips of the fuse holder.

(9) Replace the protective cover and secure in position using the two screws retained in Step (4).

(10) Replace the front panel and tighten the four cross-head retaining screws.

(11) Switch on the mains supply to the unit. If the fault persists or the fuse fails again please contact Portacel Customer Services for assistance.

3.3 ERROR MESSAGES

The following Error Messages will be displayed on the LCD under certain error conditions:

(1) High Vacuum Alarm.

(2) Low Vacuum Alarm.

(3) Valve Motor Failure.

(4) Valve Close Failure.

(5) Loss of Signal.

(6) Set Point Failure.

(7) System Failure.

Details of these error messages and their meanings are given in Chapter 4, Table 4.1.

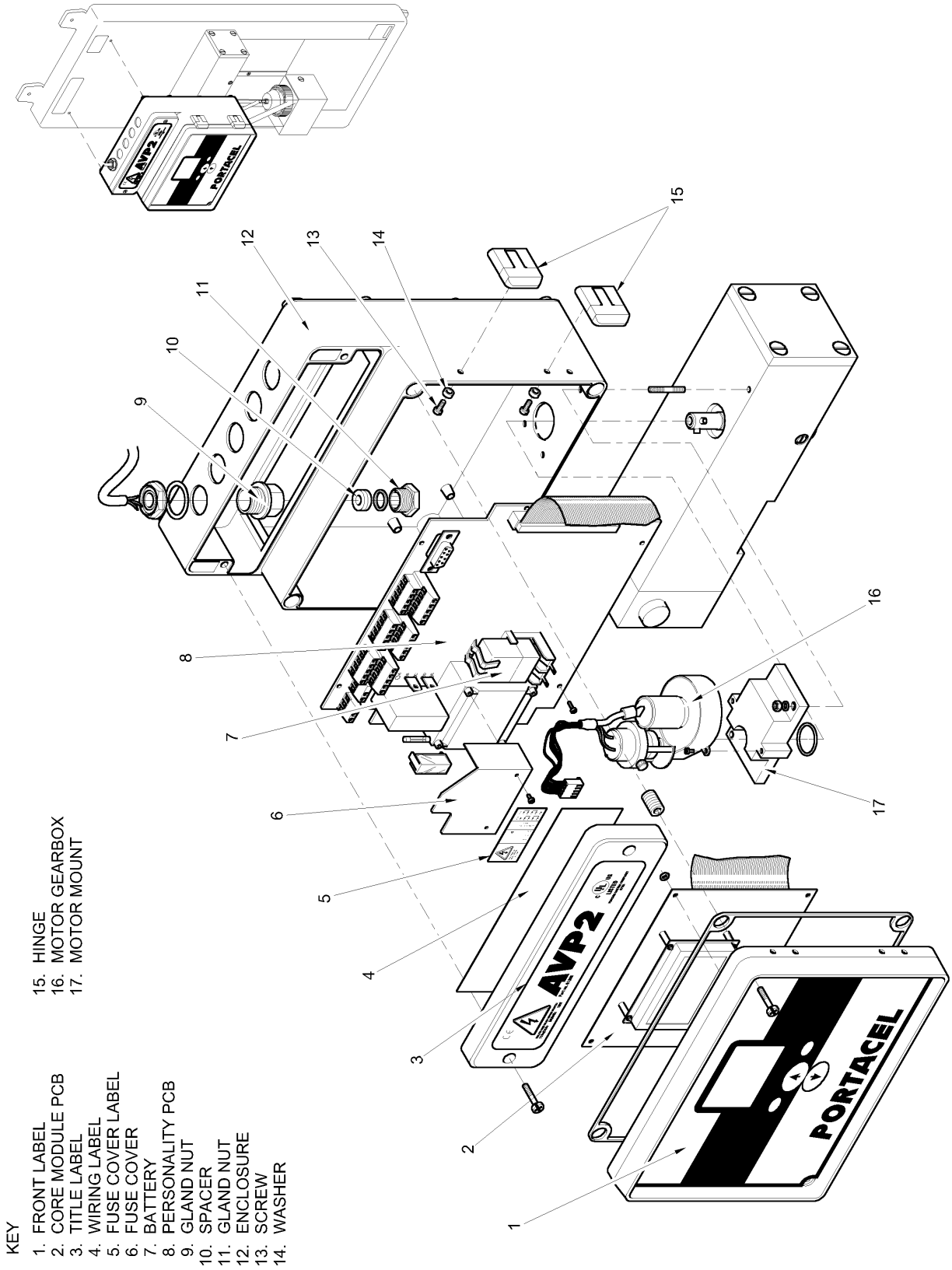

Fig 5.1 AVP2 Unit

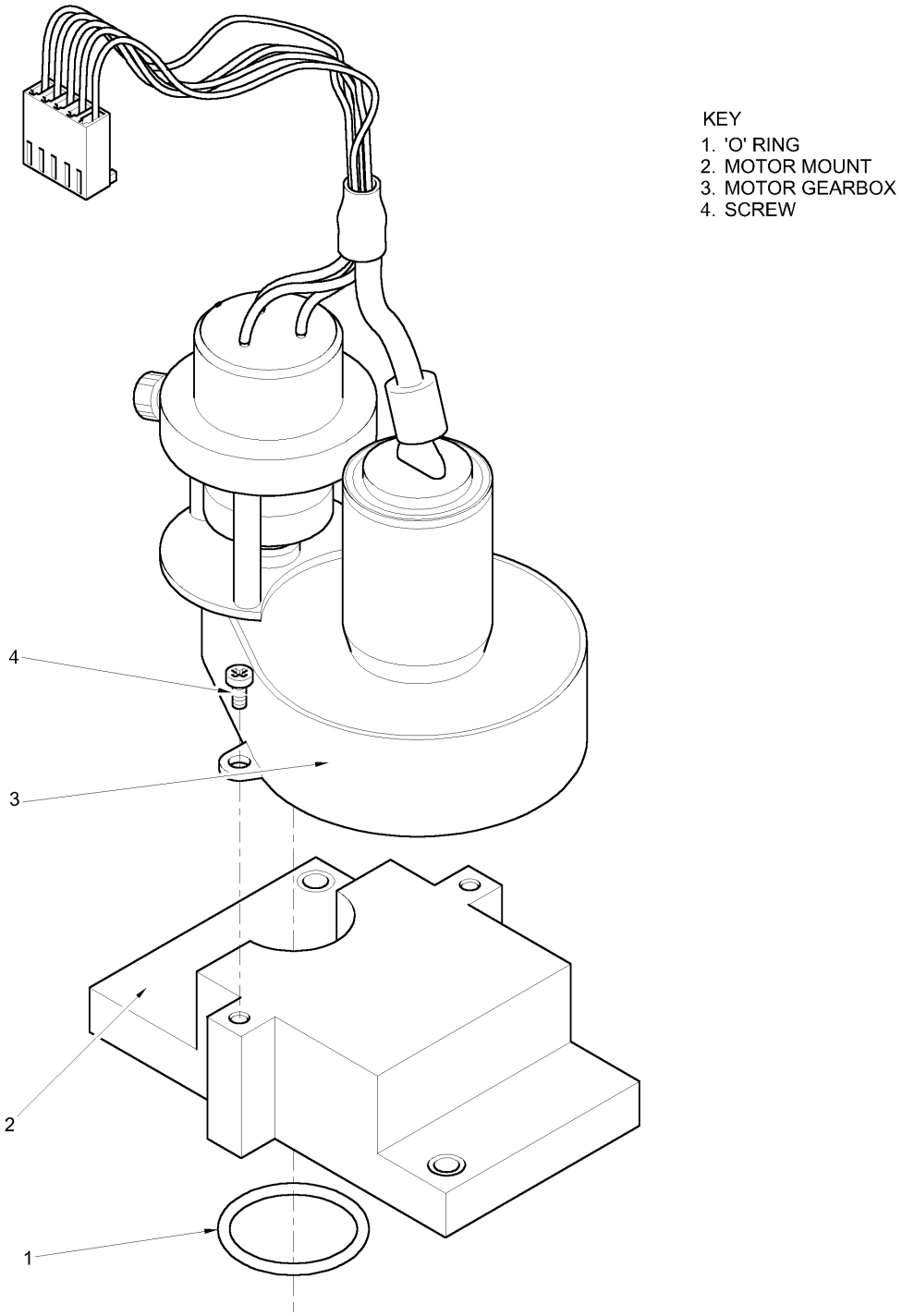

Fig 5.2 Motor/gearbox Assembly

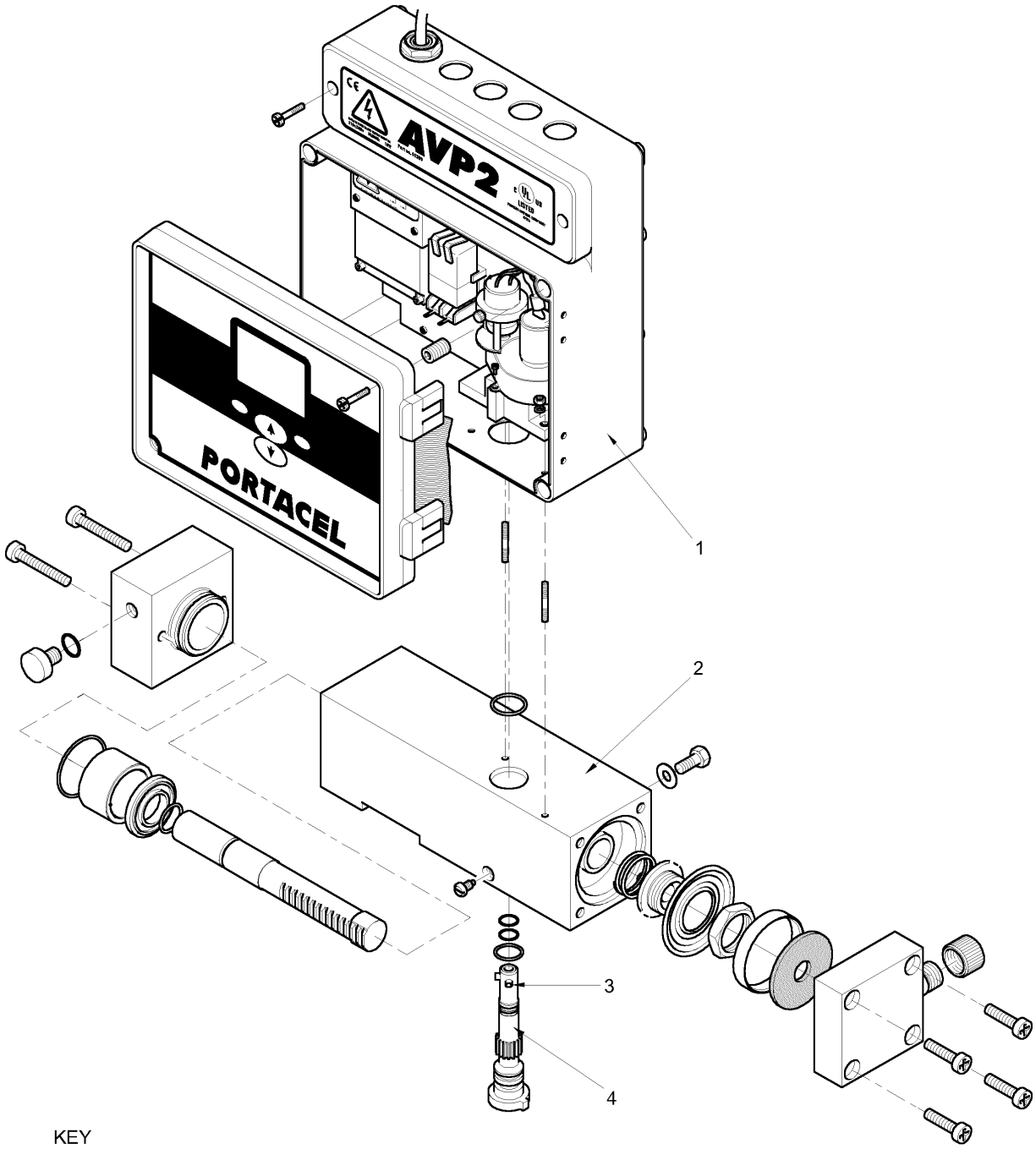

KEY
1. AVP2 UNIT
2. VALVE, FLOW, CONTROL
3. SCREW, GRUB, HEXAGONAL
4. SHAFT, VALVE, DRIVE

4. SPARE PARTS

The following tables list the Portacel part numbers for the items shown in Figures 5.1 to 5.3 inclusive.

Table 5.1 AVP2 Part Numbers (Figure 5.1)

Fig. Item Reference	Description	Part Number
1	Front Label	40689
2	Core Module PCB	40604
3	Title Label	41248
4	Wiring Label	41254
5	Fuse Cover Label	41464
6	Fuse Cover	41397
7	Battery	NS713
8	Personality PCB	40606
9	Gland Nut	GD22
10	Spacer	41649
11	Gland Nut	GD28
12	Enclosure	40912
13	Screw	SM32
14	Washer	WB60
15	Hinge	ND73
16	Motor Gearbox	41416
17	Motor Mount	41247

Table 5.2 Motor Gearbox Assembly Part Numbers (Figure 5.2)

Fig. Item Reference	Description	Part Number	
		Chlorinator/ Sulphonator	Ammoniator
1	O Ring	OB126	OB528
2	Motor Mount	41247	41247
3	Motor gearbox Assembly	41416	41416
4	Screw	SM35	SM35
	O Ring	OB109	OB519
	Stud	SR34	SR34
	Nut	ND69	ND69
	Washer	WB59	WB59

Table 5.3 AVP2 and Control Valve Part Numbers (Figure 5.3)

Fig. Item Reference	Description	Part Number
1	AVP2 Unit	41399
2	Valve, Flow, Control with Vacuum Relief	41647
3	Screw, Grub, Hexagonal	SM159
4	Shaft, Valve, Drive	41398

CHERWELL PV MKII CHANGEOVER SYSTEM

O&M MANUAL

PART NUMBER 42857

Portacel
Winnall Valley Road
Winchester
Hampshire, SO23 0LD
United Kingdom
Tel: +44 (0) 1962 826300
Fax: +44 (0) 1962 866084
Web: www.portacel.com

CONTENTS

1.0 Introduction
- 1.1 Gas Systems
- 1.2 Liquid Systems

2.0 Installation
- 2.1 General
- 2.2 Gas Systems
- 2.3 Liquid Systems
- 2.4 External Connection Table

3.0 Operation
- 3.1 Front Panel Controls
- 3.2 Operating Sequence
- 3.3 Commissioning

4.0 Fault Finding

5.0 Drawings
- 5.1 Circuit Diagram
- 5.2 General Assembly

6.0 Technical Specifications

1.0 INTRODUCTION

The Portacel Cherwell PV MKII system automatically changes over a supply (gas or liquid) from a depleted supply to a second, refilled supply. This operation forms a duty/standby system for gas/chemical supplies. The changeover is affected by using either pressure or level switches fitted as part of the supply system connected to the Cherwell which operates a 24Vdc 3 port valve with an intermediate position giving supply isolation. Feedback from the valve actuator is built in for safety reasons ensuring valve position integrity is maintained if actuator failure was to occur.

The Cherwell PV can be connected into a site gas monitoring system to isolate both supplies automatically in the event of a gas alarm. Also, it can be connected to remote audio or visual alarms in order to indicate that a changeover has taken place and / or that the gas/chemical supply has been shutdown.

1.1 Gas Systems

The components of the system in a typical installation can consist of:

- One three-way 24V-dc actuator valve.
- One Cherwell PV MKII changeover control panel.
- Two-diaphragm pressure switches.
- Valve installation kit
- Two vacuum regulators.

The Cherwell PV system is designed to be used with Chlorine, Ammonia or Sulphur dioxide. Valves supplied by Portacel have been constructed to be resistant to all of these gases.

1.2 Liquid Chemical Systems

The components of the system in a typical installation can consist of:

- One three-way 24V-dc actuator valve.
- One Cherwell PV MKII changeover control panel.
- Two-tank level switches.
- Valve installation kit

The Cherwell PV system is designed to be used with Hypochlorite, Bisulphite and Ammonium hydroxide. Valves supplied by Portacel have been constructed to be resistant to all of these chemicals.

2.0 INSTALLATION

When unpacking the Cherwell PV MKII system please check carefully that all the components are complete against the packing list and that they are undamaged. Any omissions or damaged items should be reported to the nearest Portacel office or representative.

The components of the Cherwell PV MKII system must be installed by a competent installation and commissioning engineer according to relevant site and national instructions and procedures.

2.1 Gas Installation

Mount the valve and the two pressure switches into the pipework according to the design of the installation, which must have been approved by Portacel.

Note: the pressure switches must be mounted horizontally and with the body above the pipe.
Install the control panel level and at a height that allows ease of use, according to the installation requirements.
Wire in the changeover valve, the two pressure switches and any remote alarm indicators and/or shut down sensors to the terminal blocks in the lower section of the control panel in accordance with the external connection table (see Paragraph 2.3). The control panel operates on either 230V or 110V see Technical Specifications in section 6. Connect the panel to the power supply through a circuit breaker to the terminals indicated in the external connection table (see Paragraph 2.3). The maximum current consumption of the system is 1 Amp.

2.2 Liquid Chemical Installation

Mount the valve into the pipework in accordance with the design of the installation, which must have been approved by Portacel. Install tank level switches into both tanks and wire back to the Cherwell panel terminating as detailed in the external connection table (see Paragraph 2.3).
Install the control panel level and at a height that allows ease of use, according to the installation requirements.
Wire in the changeover valve, the two level switches and any remote alarm indicators and/or shut down sensors to the terminal blocks in the lower section of the control panel in accordance with the external connection table (see Paragraph 2.3). The control panel operates on either 230V or 110V see Technical Specifications in section 6. Connect the panel to the power supply through a circuit breaker to the terminals indicated in the external connection table (see Paragraph 2.3). The maximum current consumption of the system is 1 Amp.

2.3 External Connection Table

Terminal Number	Description	Comments
1	Valve Actuator pin 1 (Port 1)	Actuator drive Port 1
2	Valve Actuator pin 2 (Port 2)	Actuator drive Port 2
3	Valve Actuator pin 3 (OV Common)	Actuator drive Common
4	Valve Actuator pin 4 (Intermediate)	Actuator drive Isolated
5	Valve Actuator Port 1 limit switch (N/O)	Closed at Limit
6	Valve Actuator Port 1 limit switch (N/O)	Closed at Limit

7	Valve Actuator Port 2 limit switch (N/O)	Closed at Limit
8	Valve Actuator Port 2 limit switch (N/O)	Closed at Limit
9	Level/Pressure SW for Supply 1 (N/O)	See Note 1
10	Level/Pressure SW for Supply 1 (N/O)	See Note 1
11	Level/Pressure SW for Supply 2 (N/O)	See Note 1
12	Level/Pressure SW for Supply 2 (N/O)	See Note 1
13	Supply Shutdown loop N/C	See Note 2
14	Supply Shutdown loop N/C	See Note 2
Telemetry and Alarms (Optional Connections)		
15	Plant Shutdown Indication N/C	Volt Free Contact
16	Plant Shutdown Indication Common	Volt Free Contact
17	Plant Shutdown Indication N/O	Volt Free Contact
18	Supply 1 Empty N/C	Volt Free Contact
19	Supply 1 Empty Common	Volt Free Contact
20	Supply 1 Empty N/O	Volt Free Contact
21	Supply 2 Empty N/C	Volt Free Contact
22	Supply 2 Empty Common	Volt Free Contact
23	Supply 2 Empty N/O	Volt Free Contact
24	Supply 1 On Line N/C	Volt Free Contact
25	Supply 1 On Line Common	Volt Free Contact
26	Supply 1 On Line N/O	Volt Free Contact
27	Supply 2 On Line N/C	Volt Free Contact
28	Supply 2 On Line Common	Volt Free Contact
29	Supply 2 On Line N/O	Volt Free Contact
Power Connections		
L	Live a.c. Connection	85-264Va.c. Frequency 47 to 63 Hz
N	Neutral a.c. Connection	
E	Earth Connection	

Note 1.
Contacts connected to these terminals must be capable of taking 24Vd.c. At 40mA.
Note 2
Contacts connected to these terminals must be capable of taking 24Vd.c. At 40mA and a link is required between terminals 13 and 14 if this facility is not used.

3.0 FRONT PANEL COMPONENTS

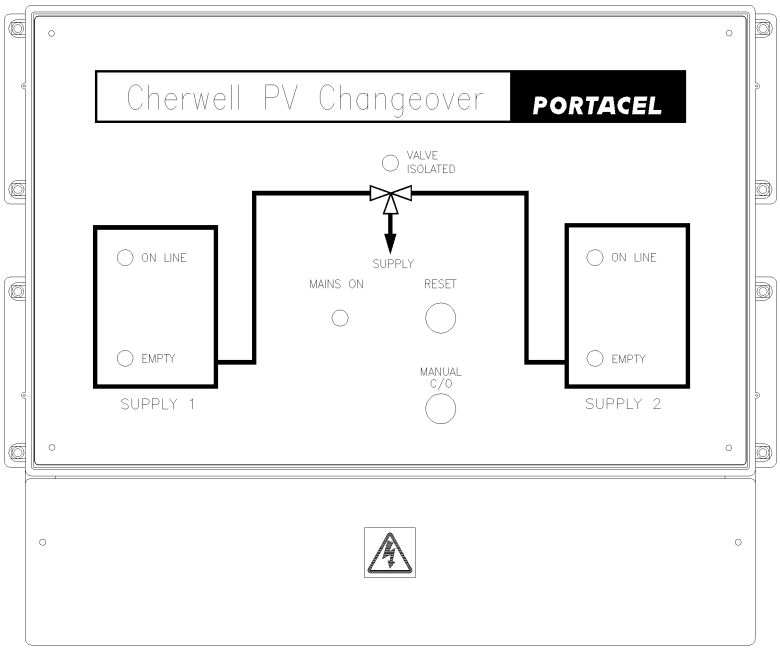

3.1.1 Mains On Lamp

Lamp (Red) is illuminated when a.c. power is applied.

3.1.2 Supply 1 On Line Lamp

Lamp (Green) is illuminated when supply 1 is on line i.e. Valve is in the Port 1 position.

3.1.3 Supply 1 Empty Lamp

Lamp (Yellow) is illuminated when supply 1 is exhausted. Note the lamp will remain illuminated until the Reset button is activated after supply 1 is replenished.

3.1.4 Supply 2 On Line Lamp

Lamp (Green) is illuminated when supply 2 is on line i.e. Valve is in the Port 2 position.

3.1.5 Supply 2 Empty Lamp

Lamp (Yellow) is illuminated when supply 2 is exhausted. Note the lamp will remain illuminated until the Reset button is activated after supply 2 is replenished.

3.1.6 Valve Isolated Lamp

Lamp (Yellow) is illuminated when the valve is in the isolated (intermediate) position.

3.1.7 Reset Button

The reset button is pressed after supply(s) have been replenished to de-latch associated supply empty lamps

3.1.8 Manual Changeover Button

During operation pressing the Manual Changeover will initiate an immediate change from one supply to the other. Pressing the button a second time will revert the supply back to the original position. Note the changeover button will not allow selection of an empty supply.

3.2 Operating Sequence

3.2.1 When the system has been powered up:

- The "Mains On" light comes on.
- One of the supply "On-Line" lights comes on if supply is available.

If both yellow "Empty" lights come on there is no supply available from either supply sources.

The changeover system will decide which supply to put on-line, but the other supply can be selected manually by pressing the "Manual C/O" button.

3.2.2 When a supply becomes empty the changeover to the second supply will take place automatically

- The "Empty" light of the empty supply comes on.
- The "On-Line" light of the empty supply goes off.
- The "On-Line" light of the next supply comes on.

The empty supply cylinder/tank is now off line and the second supply is providing supply to the system.
The empty supply can now be replaced or refilled.

NOTE: On gas systems **Shut** off the isolating valve of the depleted cylinder before disconnecting the cylinder from the pipe work. <u>There will be gas between the cylinder valve and the vacuum regulator</u>. Do not forget to open up the valve of the new cylinder after it has been connected to the system.

After the supply has been changed, press the "Reset" button and the yellow "Empty" light or lights will go off. The new supply will now be ready to be put "On-Line" automatically when the current supply has been depleted.

3.2.3 Pressing the "Manual C/O" button will immediately change the supply from one supply to the other.

The changeover valve will only go to the fully closed or isolated position in response to the gas alarm or by closing both isolating valves on a gas system waiting for both pressure switches to activate the system. When used with a liquid chemical system the changeover valve will go to the fully closed or isolated position in response to both level switches indicating empty supply.

WARNING:
The pipe run between the three-way valve and any gas cylinder / chemical tank with its cylinder / tank outlet valve open will still be live with gas / chemical from that supply.

3.3 COMMISSIONING

There is no commissioning or setting up required of the Cherwell PV MKII system.

When the components have been satisfactorily installed and the whole gas / chemical installation is ready to run, open the isolating valves at both cylinders / tanks.

Note: At this point a gas system requires testing for leaks.

PREPARATION FOR OPERATION

When all connections specified in the Installation section have been made, the following pre-start checks must be completed.

Gas Leaks
After installation the operator is required to test the complete system for gas leaks, to ensure that all connections are secure and that the equipment is safe.

WARNING: It is recommended that a breathing apparatus be worn during the gas leak testing operations.

Chemical Leaks
After installation and prior to startup check the system for chemical leaks using breathing apparatus when dealing with toxic chemicals.

Switch on the control panel power at the main circuit breaker, and the system will come up online immediately.

4.0 Fault Finding (Service Trained Personnel Only)

4.1 On power up the mains indicator lamp fails to illuminate!
There are two internal fuses fitted to this unit which if failed will require replacement. The fuses are as follows:
1A Portacel Part No. 41991 fitted on the left-hand side of the PSU (a.c. fuse).
1A Portacel Part No. 41991 fitted on the right-hand side of the PSU (d.c. fuse).
Danger! Ensure that the unit is isolated from the power source and direct replacements are used for the above fuses.

If the problem persists after the fuses are checked PSU failure is probably the cause and should be replaced with:

PSU Portacel Part No. 42000

4.2 On power up the changeover valve moves to the intermediate position and the supply 1 and 2 empty lamps are **not** illuminated!
This indication if the supply is full will be due to the shutdown loop being broken between pins 13 and 14. If gas detection is not being used these terminals should be fitted with a link, if detection circuits are connected ensure they are normally closed contacts and no alarm has triggered.

4.3 Faults associated with relays can normally be determined by monitoring the alarm outputs. All relays are the same type / part number and are socket mounted to enable easy replacement if necessary:
Relay Portacel Part No. 41615

5.0 Drawings

The following drawings are included in this manual for reference purposes

5.1 Circuit Diagram
5.2 General Assembly

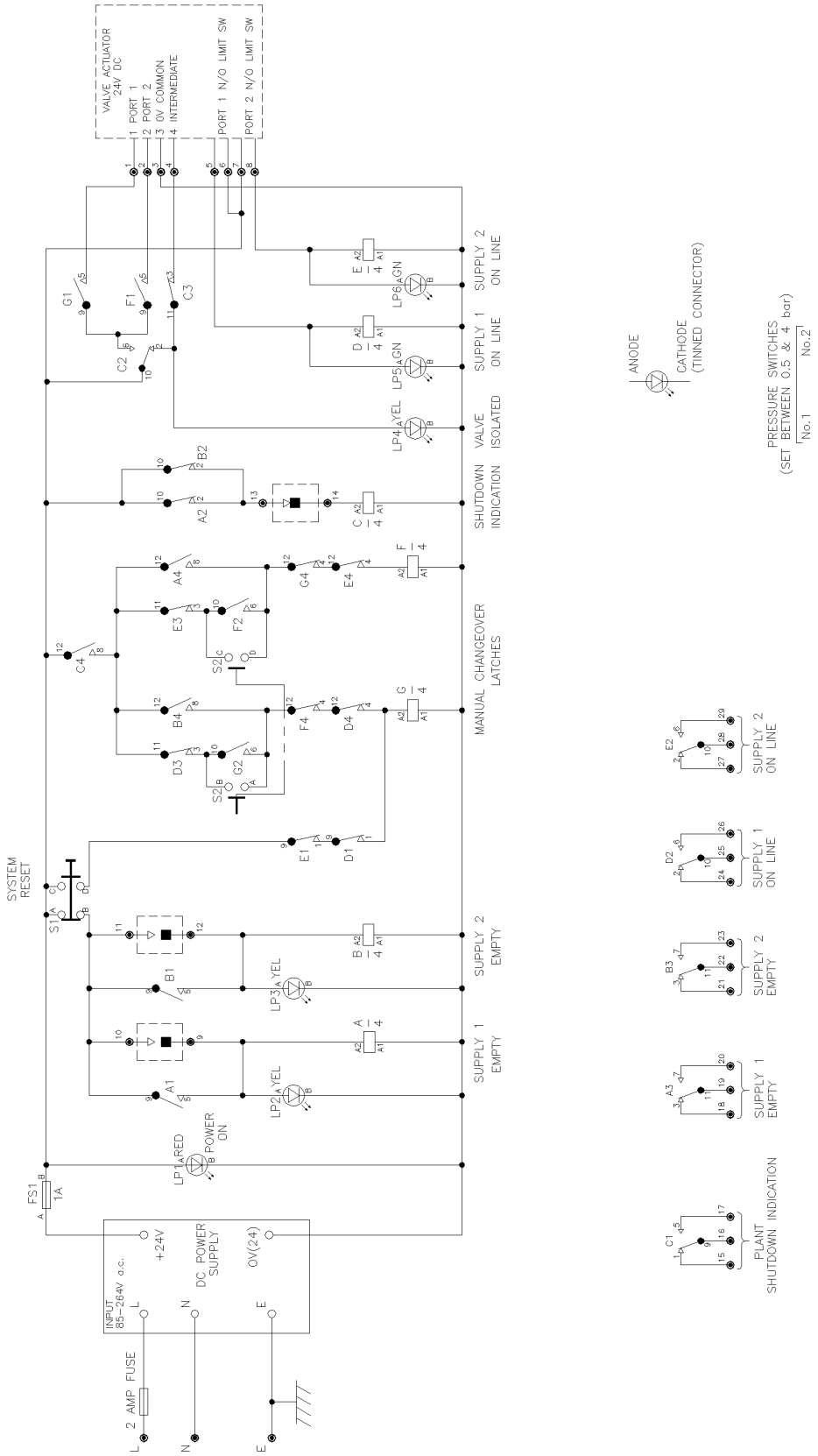

5.1 Circuit Diagram

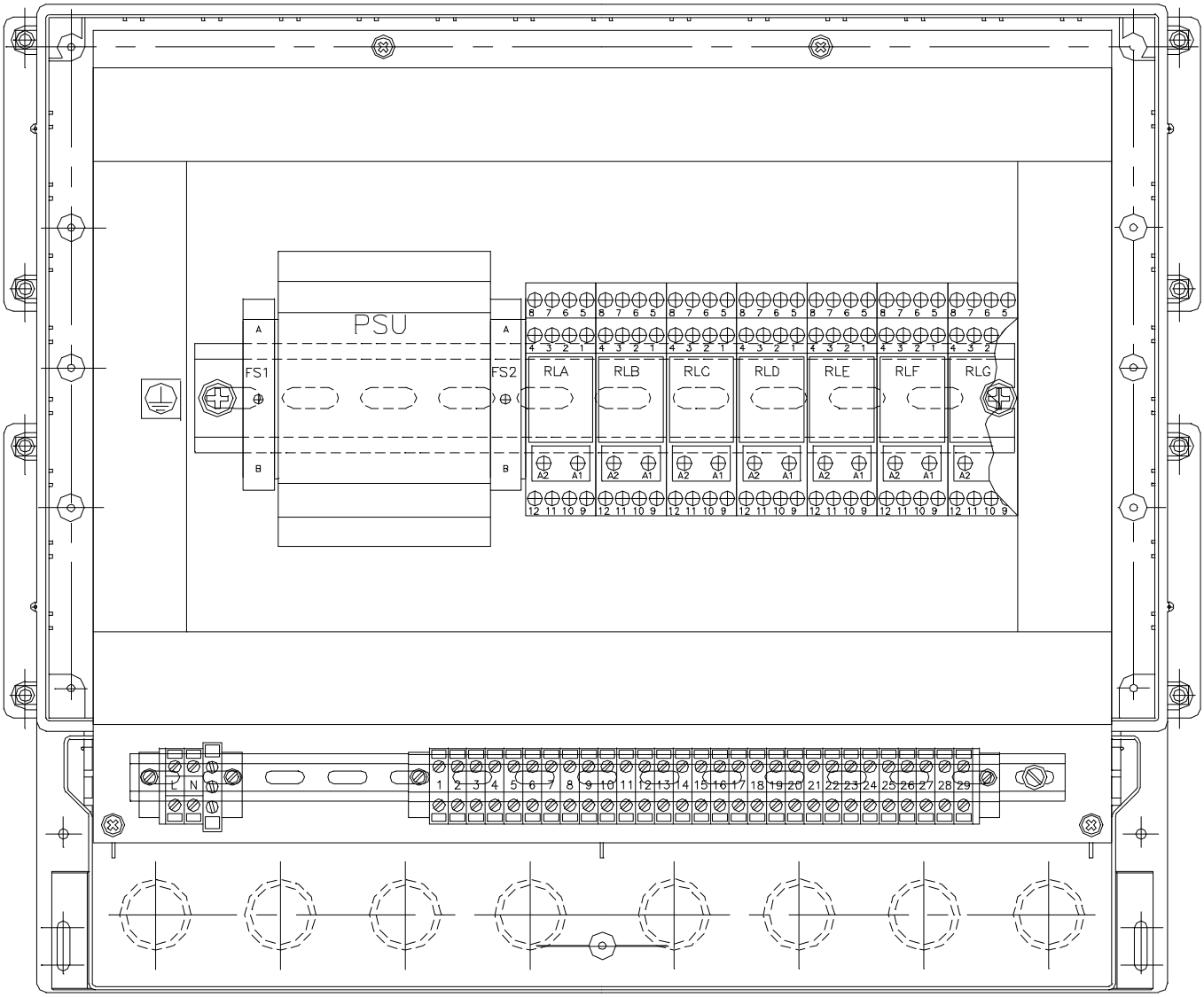

5.3 Cherwell PV MKII Assembly

6.0 Technical Specifications

Enclosure – ABS Wall Mounting, IP65, bottom entry.
Size -Length 330 x Width 400 x Depth from wall 180mm
Power Requirements – 85-264Va.c. @ 47 to 63 Hz
1 Amp Maximum

Enclosed PSU Specification

Power requirement as above
RFI to EN 55022-B
Emitted Interference to EN 50081-1
Overload and Short circuit protection
Adjustable output Voltage
Fully Regulated Output
Approvals: UL Recognised
Standard: EN60950

Relay Specification

Coil Voltage 18-26.4Vd.c
Max. Switched current 3A
Max. Switched voltage 250Va.c
Approvals: UL, CSA

Valve Actuator Specification

Type GF EA20 Actuator
Voltage Nominal 24Vd.c
Power Consumption 12W
Protection IP65 in accordance with DIN 40050

STATUS SCIENTIFIC CONTROLS

Issue: 1.0

Date: 08 02 02

FGD15
User Manual

STATUS SCIENTIFIC CONTROLS LTD.
Hermitage Lane Industrial Estate,
Kings Mill Way,
Mansfield,
Nottinghamshire.
NG18 5ER
England
Tel : 01623 651381
Fax : 01623 421063

STATUS SCIENTIFIC CONTROLS

FGD15 User Manual

1 INTRODUCTION 1-1

2 INITIAL CONFIGURATION 2-1

2.1 GAS GENERATORS 2-1
2.2 SENSOR CONFIGURATION 2-1
2.3 CALIBRATION 2-1
2.4 GENERAL CONFIGURATION 2-2
2.5 INTERNAL BATTER BACK-UP 2-2
2.6 ALARMS, FAULTS & OUTPUTS 2-2

3 SPECIFICATION 3-1

4 OPERATION 4-1

4.1 ALARMS 4-1
4.2 FAULTS 4-2
4.3 SWITCH RESET INPUT 4-2

5 THE FGD15 5-1

5.1 FIELD CONNECTIONS 5-1
5.2 FUSES AND REPLACEMENT 5-2
5.3 GAS GENERATOR CELL 5-3
5.3.1 Generator Cell Specification 5-3
5.4 BATTER BACK-UP 5-4
5.4.1 External Battery Back-Up 5-4
5.5 EXTERNAL RESET SWITCH 5-4
5.5.1 Functionality 5-5
5.6 S STEM OUTPUTS 5-5
5.6.1 Analogue Outputs 5-5
5.6.2 Beacon and Sounder Outputs 5-6
5.6.3 Relay Outputs 5-6
5.7 GLAND ENTRIES 5-6

6 SOFTWARE FEATURES 6-1

6.1 ENTERING THE MENU S STEM 6-1
6.1.1 Menu System Structure 6-1
6.2 MENU OPTIONS 6-3
6.2.1 Channel 6-3
6.2.2 Inhibit 6-4
6.2.3 Data Logging 6-5
6.2.4 Gas Generator 6-7
6.2.5 Clock 6-10
6.2.6 Relays 6-12

6.2.7 Contrast 6-13
6.2.8 Backlight 6-14
6.2.9 Power 6-14
6.2.10 Password 6-15
6.2.11 Engineer 6-15

7 SENSOR/GENERATOR CONNECTIONS 7-1

8 ANALOGUE OUTPUT 8-1

8.1.1 Voltage Output 8-1
8.1.2 4-20mA Current Source 8-2
8.1.3 4-20mA Current Sink 8-2

9 CALIBRATION 9-1

9.1 SENSOR CALIBRATION 9-1
9.2 ANALOGUE OUTPUT CALIBRATION 9-2

10 RS232 COMMUNICATIONS 10-1

10.1 MENTOR PC 10-1
10.2 REPROGRAMMING 10-1

11 ROUTINE MAINTENANCE & SERVICING 11-1

11.1 ROUTINE INSPECTION AND MAINTENANCE 11-1

12 FGD15 SPARES LIST 12-1

1 INTRODUCTION

The FGD15 is a two-channel wall mounting environmental monitor.

Key design features are:

- Two sensing channels.
- Self-test feature allows gassing of sensors at pre-determined intervals using gas generator cells.
  Note:
  Gas generator cells not available for all gases.
- Backlit LCD Display and 4-button multifunction keypad.
- Data logging feature is standard.
- Internal 1.2Ahr battery provides support in the event of mains supply failure.
- Intuitive menu system provides:
  - Alarm level selection and adjustment
  - Sensor and analogue output calibration.
  - Self-test feature frequency and duration
  - Access of logged data
- Analogue output provided for each channel to allow retransmission of detected signal levels (4-20mA current source, sink or 1-5V output) with 10-bit resolution.
- Input terminals provided for connection of external independently charged and fused battery to extend battery back-up times.
- Outputs provided to drive external sounder (50mA max) and beacon (150mA max).
- Terminals provided for connection of an external alarm accept button.
- 5 voltage free SPCO relays provided for alarm fault indication.

2 INITIAL CONFIGURATION

2.1 Gas Generators

All FGD15 instruments are supplied with the gas self test feature (using generator cells) disabled. Therefore if gas generator cells were requested, then following installation, this feature will need to be enabled and configured.

Note:
1. Gas generators should be configured to perform response tests during times where personnel are not working in the monitored area (e.g.Sundays, shift changes etc.). The FGD15 will not alarm due to high levels of gas whilst a response test is being performed.
2. If the instruments were shipped with the self-test feature enabled, when the instrument was first powered, the system would check to see when a self-test should have been performed last. If the test was overdue, then a self-test would begin immediately. If no generator was fitted, a fault condition would be generated.
3. A gas test will not be started if the channel to be tested is in an alarm condition.
4. The FGD15 will not generate alarms during response (bump) tests.

To configure the gas generator cell tests, refer to section 6.2.4.

2.2 Sensor Configuration

Under normal circumstances the instrument will be configured before it leaves the factory. However, the correct configuration of the system is ultimately the responsibility of the installation and or commissioning personnel.

Refer to section 6.2.1.3 for details regarding sensor configuration.

2.3 Calibration

Following installation the system should be switched on and allowed to stabilise (and acclimatise) to its environment. Following a period of at least 30 minutes, the instrument must be calibrated.

For calibration instructions refer to section 9.

2.4 General Configuration

Status Scientific Controls recommend that any new installation have all configuration options confirmed to ensure that the instrument behaves in the desired manner. For example:

- Sensor Type
- Calibration
- Alarm levels
- Relay operation
- Generator frequency, duration etc.

2.5 Internal Battery Back-Up

A small switch is located within the FGD15 enclosure on the lower board (far right hand side – see page 5-1). This switch controls the connection between the internal battery and the system:

OFF: The internal battery will not be charged, and will not support the system in the event of a mains failure.

ON: The internal battery charges, and will automatically support the system if the mains supply fails.

The connection between the internal battery and the system will be switched off during transit to avoid the instrument being powered (and the battery discharging).

2.6 Alarms, Faults & Outputs

The FGD15 has the ability to indicate when alarm or fault have been detected.

It is the responsibility of the installation commissioning personnel to ensure that these outputs are utilised to allow a safe working environment to be maintained.

Output	Designation	Connections
Relay 1	Channel 1 – Low Alarm	Voltage free relay contacts
Relay 2	Channel 1 – High Alarm	Voltage free relay contacts
Relay 3	Channel 2 – Low Alarm	Voltage free relay contacts
Relay 4	Channel 2 – High Alarm	Voltage free relay contacts
Relay 5	Any System Fault	Voltage free relay contacts
Sounder	Channel 1 OR 2 Alarm	Solid state 12V output
Beacon	Channel 1 OR 2 Alarm	Solid state 12V output

3 SPECIFICATION

Supply		
Input Voltage:	85-264V AC 47-440Hz	
Input Power:	15W max	
Inrush Current:	15A 100V AC (full load)	30A 200V AC (full load)
Battery Backup		
Battery:	1.2Ahr 12V Battery mounted within enclosure	
Backup time:	10Hrs minimum Battery backup time is calculated assuming the following: 1. All detecting channels are healthy. 2. The LCD backlight is OFF. 3. All relays assumed to be normally energised.	
External Battery:	Terminals are provided for the connection of an external battery to extend the battery backup time. The external battery must be independently fused and charged (T500mA Fuse Recommended).	
Outputs		
Analogue Outputs:	4-20mA analogue output (10-bit resolution) provided for each channel (1-5V option available via link switches)	
Sounder Output:	12V DC 50mA max nominal	
Beacon Output:	12V DC 150mA max nominal	
Relay Outputs:	5 SPCO Relays provided for system status indication. All with voltage-free, single pole changeover contacts (5A rated 250V AC – 30V DC). Relay Designations are: • Alarm Levels 1 & 2 (channel 1) • Alarm Levels 1 & 2 (channel 2) • System Fault	
Sensor Input		
No of Channels:	2	
Sensor Compatibility:	Any standard 3-electrode electrochemical sensor. **Notes:** • Test cells not available for all gases • Cable recommendation: 6-cores of 16 0.2 wire, overall screened. e.g. Cable Reference 16-2-6C (as Farnell 715-815) • Cable length 100m maximum	
Fuses		
Mains Input Fuse	PSU Output Fuse	Battery Fuse
FS1: T1A	FS2: T1A	FS3: T500mA

Test Cell Outputs	
Number of Outputs:	2 independently controlled outputs are provided.
Output Current:	MCU controlled constant current output (3.0mA max)
Additional Features	
Display:	100 x 33 dot LCD Graphical Display
Keypad:	4-Button Multifunction Keypad
Clock:	Real-time clock included as standard
Datalogging:	Datalogging is provided (4000 record limit).
Software:	Software configuration provided by LCD Display and multifunction keypad.
Cable Entries	
Entries:	10 Gland mounting holes provided
Glands:	5off M16 Cable Glands 5off M16 blanking plugs

4 OPERATION

This section does not cover all features of the FGD15. It has been written to explain the common indications given by the FGD15, and some of the common user operations that must be performed.

4.1 Alarms

In the event of a gas level being detected in excess of the alarm set point on either channel, the following will occur:

- The relay associated with the alarm level that has been exceeded will change state.
- The Sounder and Beacon outputs will be turned ON.
- An A will flash adjacent to the channel that is in alarm.
- MUTE will appear above one of the keypad switches.

Acceptance of Alarms:
When an alarm has been initiated, it is necessary to MUTE audible alarms and CLEAR the alarm condition.

- Press MUTE (as shown on the display), this will turn OFF the audible alarm connected to the sounder output (the visual alarm can not be cancelled until the gas level falls below the set alarm level).
- The MUTE button will now become the CLEAR button.
- Pressing CLEAR (once the gas falls below the alarm levels) will turn OFF the visual alarm connected to the beacon output and return all relays to their healthy state.

Note:
The normal (healthy) state of relays can be set in the instruments software configuration. Also the latching non latching status can be configured. Refer to section 6.2.6 for further details.

4.2 Faults

The FGD15 has a fault relay that changes state in the event of a fault condition being detected. A fault condition is considered to be:

- The sensor output indicating a gas level more than 10 of FSD below zero.
- Mains Failure
- A sensor failing a routine response test (utilising the gas generator cell)

In the event of a fault condition being detected, the following will occur:

- The fault relay will change state.
- An F will flash adjacent to the channel that is in alarm.
  Note:
  If the fault is due to failure of a response test, G will flash on the display in place of the F.
- In the event of a mains fail fault, MAINS FAIL will flash on the display.

Acceptance of Faults:

- Response Test Fail
  This fault may have occurred because either the sensor has not responded and or the generator cell has not generated gas. A response test fault may only be cleared by the successful completion of a response test on the faulty channel.
  Note:
  Disabling the response test feature on the faulty channel will also clear the fault but this must only performed if the generator is found to be at fault.
- Mains Fail Fault
  If mains power is lost, MAINS FAIL will be displayed and the fault relay will change state. This type of fault will automatically clear and the fault relay will return to its healthy status once the mains supply is restored.
- Sensor Fault
  A sensor fault will normally require the MUTE and CLEAR buttons to be pressed before the relays will return to their healthy status.

Note:
The normal (healthy) state of relays can be set in the instruments software configuration. Also the latching non latching status can be configured. Refer to section 6.2.6 for further details.

4.3 Switch/Reset Input

The external RESET button behaves in the same way as the MUTE CLEAR button described in section 4.1. This allows remote silencing of audible alarms and clearing of alarm conditions.

5 THE FGD15

5.1 Field Connections

WARNING
Disconnect the mains supply at source before removing any covers from the FGD15 enclosure.

Removing the lower cover plate from the FGD15 enclosure reveals the field terminals. The cover plate is secured by four M4 button head screws. An earth wire connects between the earth stud within the enclosure and the cover plate. Ensure that this is not damaged when the cover plate is removed.

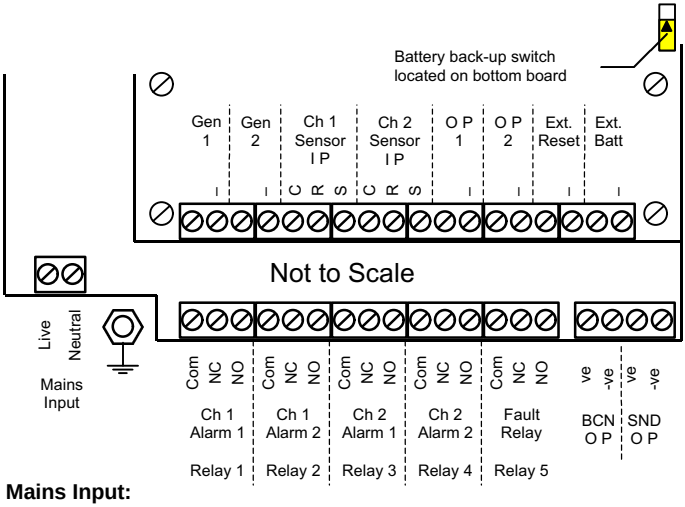

Mains Input:
The mains input connector is located to the far left of the lower board within the FGD15 enclosure. A yellow cover is positioned above the terminals (and the mains fuse) to prevent inadvertent contact with live terminals. Two thumbscrews hold the cover in place and are removed by rotating anti-clockwise.

Note:
Ensure all covers are refitted before powering the unit.

The incoming earth connection must be securely connected to the mains earth stud (M4 stud is provided) located on the base plate of the FGD15 to the right of the mains input terminals.

5.2 Fuses and Replacement

Fuse Values
The following fuse values are used within the FGD15:

Ref:	Rating	Protection	Location
FS1	T1A	Mains Input	Behind mains input terminals
FS2	T1A	15V DC (SMPSU)	Beneath display board
FS3	T500mA	Internal Battery	Beneath display board

All fuses are standard 20mm type.

Mains Input Fuse Replacement

- Switch OFF the mains supply at source.
- Rotate anti-clockwise the four screws that hold the lower cover of the FGD15 enclosure in position until the cover is released. Lift the cover carefully away from the assembly (an earth wire is attached).
  Note:
  The screws do not have to be completely removed from the cover.
- Rotate anti-clockwise the two thumbscrews that hold the small yellow protective cover in position until it releases (located above the mains input terminals).
- Lift the cover from the unit to expose the mains input fuse.
- Replace the damaged fuse.
- Cover refitting is the reverse of the above procedure. All covers must be correctly fitted whilst in use.

15V DC Fuse and/or Internal Battery Fuse Replacement

- Switch OFF the mains supply at source.
- Rotate anti-clockwise the four screws that hold the upper cover of the FGD15 enclosure in position until the cover is released. Lift the cover carefully away from the instrument (an earth wire and a ribbon cable is attached).
  Note:
  The screws do not have to be completely removed from the cover.
- Rotate anti-clockwise the three thumbscrews that hold the large yellow protective cover in position until it releases.
- Lift the cover from the unit to expose the 15V DC fuse (FS2 - left most fuse) and the battery fuse (FS3 – right most fuse).
- Replace the damaged fuse.
- Cover refitting is the reverse of the above procedure. All covers must be correctly fitted whilst in use.

5.3 Gas Generator Cell

Gas generator cells are available to allow bump testing of the following sensors:

- Chlorine (CL_2)
- Hydrogen (H_2)
- Hydrogen Cyanide (HCN)
- Hydrogen Sulphide (H_2S)

Note:
The FGD15 is currently available with chlorine gas generator cells only. Contact Status Scientific Controls regarding price and availability of alternative generators.

The Gas Generator cell is specifically designed for *bump* testing gas sensors. It has been provided into the FGD15 Detection System to allow response testing of the sensors at predetermined time intervals. This can provide the following advantages:

- Early alert of sensor failure
- Greater operator confidence

The gas generator cells are current driven. The generator drive output of the FGD15 is selectable as a percentage of full-scale (typically 3mA).

1.1.1 Generator Cell Specification

Chlorine (Cl_2) Generator	
Gas Output	1ppm minimum
Useful Cell Life	1000 milliamp-minutes
Bump Test Time	30 seconds at 1mA (typical)
Operating Temperature	-40 C to 50 C
Relative Humidity	0 to 100
Minimum Drive Current	0.5mA
Maximum Drive Current	3.5mA
Expected Operating Voltage	3V at 1mA
Maximum Operating Voltage	12V
Shelf Life	1 ear

Note:
1. Chlorine sensors often require pre-exposure to a small amount of chlorine gas before they respond. For this reason, the bump test time may differ to that specified to allow the sensor suitable pre-exposure time.
2. The FGD15 maximum drive current is limited such that the maximum recommended drive current of the generator cell can never be exceeded (typically 3mA maximum available from FGD15).

5.4 Battery Back-Up

The FGD15 is supplied with an internal battery for back-up purposes. The system will perform a *bump-less* changeover to battery support in the event the mains supply failure.

The standard battery capacity is 1.2Ahr and provides at least 10hrs of support. This has been calculated with the following assumptions:

- Battery in a fully charged state.
- All relays set to Normally-Energised
  Note:
  The fault relay will actually be de-energised during mains fail (mains fail is a fault condition).
- No gas being detected therefore:
  - No FGD15 powered alarms or beacons operating.
  - Analogue Outputs both sourcing 4mA.
- LCD Backlight – OFF.

5.4.1 External Battery Back-Up

Terminals have been provided to allow the connection of an external battery.

An external battery is required when:

a) Mains failure is expected to last for periods in excess of the specified 10 hours.
b) Mains failure is expected to occur so frequently that the internal battery will not have sufficient time to charge.
c) A minimum of 10hours battery back-up is required, regardless of alarm conditions etc.

The external battery must have:

- Independent charging circuit. The FGD15 cannot source the charging current for an additional battery.
- Fuse between the battery and the FGD15 input terminals (T500mA recommended).

Note:
Any supply (i.e. battery or other power source) must not exceed 15V at the external battery input.

5.5 External Reset Switch

The FGD15 has an external reset input located on the uppermost board (analogue board). This provides a digital input to the processor within the FGD15.

The input terminal will normally be held at 5V (approx). The reset input is used by connecting a normally open switch between the ve and –ve reset terminals.

5.5.1 Functionality

The reset input behaves exactly the same as the MUTE CLEAR button on the FGD15 front panel during alarm conditions:

If a gas level is detected that exceeds the low alarm level of either channel, the associated alarm relay will change state. In addition to this, the beacon and sounder outputs of the FGD15 will be switched ON.

Pressing the RESET button (connected the RESET input terminals) will silence the audible alarm immediately. Once the detected gas level falls below the low alarm point, pressing the RESET button again will also cancel the visual alarms and the relays will return to their normal state.

Note:
a) If the second channel detects gas above the low alarm level, a new alarm is raised and the sounder will begin again.
b) If the relays have had their latching option set to NO, they will automatically return to their normal state once the alarm condition has passed.

5.6 System Outputs

Several outputs are provided by the FGD15 to allow indication to personnel of system status and the detected gas levels.

5.6.1 Analogue Outputs

The analogue outputs provide a means of indicating to external equipment (dataloggers, remote displays) the gas levels currently being detected by the system. The outputs are hardware configurable to one of three types:

- Current Source (4-20mA)
- Current Sink (4-20mA)
- 1 - 5V

Refer to section 8 for further details.

5.6.2 Beacon and Sounder Outputs

Two solid-state 12V outputs are provided for connection to external sounders and beacons.

Output	Output Current
Sounder Output (SND)	50mA maximum
Beacon Output (BCN)	150mA maximum

Under conditions of battery backed support, it is possible that the 12V outputs for Sounder and Beacon operation may have reduced output. A beacon and or sounder should therefore be chosen with a minimum operating voltage of 10V.

WARNING
Drawing a current greater than that specified may cause damage to the system.

5.6.3 Relay Outputs

Five single pole changeover relays are provided within the FGD15 enclosure.

Relay	Designation
1	Low Alarm – Channel 1
2	High Alarm – Channel 1
3	Low Alarm – Channel 2
4	High Alarm – Channel 2
5	System Fault Relay

All relays have voltage free contacts rated at 5A.

The operation of the relays may be configured via software. Refer to section 6.2.6 for further details.

5.7 Gland Entries

At the base of the FGD15 enclosure are 10 gland entry positions. The FGD15 is supplied typically with 5 M16 Glands and 5 blanking plugs.

6 SOFTWARE FEATURES

6.1 Entering the Menu System

```
C1 0.0 ppm CL2
C2 0.0 ppm CL2

                MENU
```

This is the FGD15 standard display. The only information displayed is the current detected gas levels and the system status (i.e. alarm, fault, mains fail etc.).

```
ENTER PASSWORD

  1     2     3     GO
```

From the FGD15 standard display press the MENU button. The instrument will then request the user password before proceeding.
Enter the password and press GO.

Note:
If the incorrect password is entered, the instrument will return to the standard display.

```
CONFIGURATION
Channel

PREV  NEXT  EXIT   GO
```

Following entry of the correct password, the first menu option will be displayed. Pressing NEXT will step through the available menu options. Pressing GO selects the menu option currently displayed.

```
WARNING
You are about to make
make changes...
  YES          NO
```

Whenever a configuration change is made, when EXITing the feature, a confirmation screen will be displayed. Press ES to save the changes or NO to abort.

```
NO CHANGES MADE

User Abort
```

If NO is pressed, the display will confirm that no change has been made.

6.1.1 Menu System Structure

The Menu system diagram shown on the following page follows this convention:

Relays	Shaded boxes indicate menu options
Normally Energised	Clear boxes indicate screens allowing configuration changes or requiring user input.

Note:
1. The FGD15 will not monitor gas levels whilst the menu system is in use.
2. Whilst the menu system is in use, if no key is pressed for a period of 2 minutes, normal operation is restored.

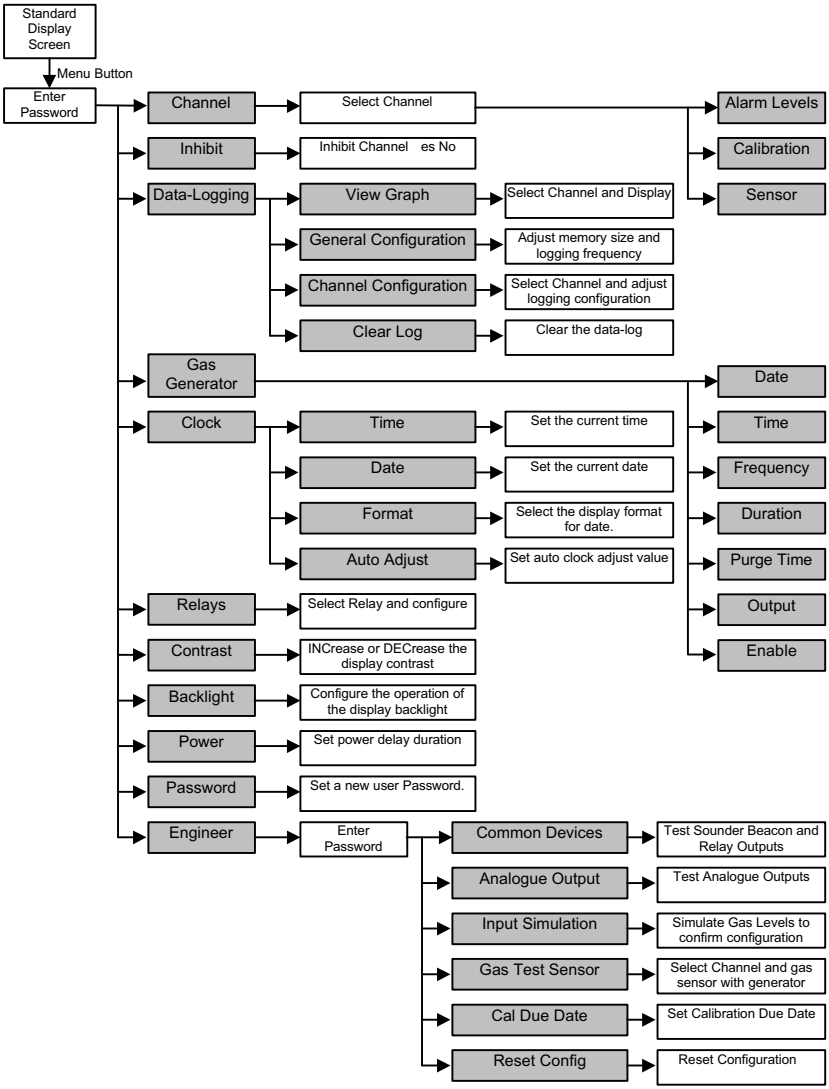
Standard Display Screen
Menu Button
Enter Password
Channel
Select Channel
Alarm Levels
Calibration
Sensor
Inhibit
Inhibit Channel es No
Data-Logging
View Graph
Select Channel and Display
General Configuration
Adjust memory size and logging frequency
Channel Configuration
Select Channel and adjust logging configuration
Clear Log
Clear the data-log
Gas Generator
Date
Clock
Time
Set the current time
Date
Set the current date
Format
Select the display format for date.
Auto Adjust
Set auto clock adjust value
Time
Frequency
Duration
Purge Time
Output
Enable
Relays
Select Relay and configure
Contrast
INCrease or DECrease the display contrast
Backlight
Configure the operation of the display backlight
Power
Set power delay duration
Password
Set a new user Password.
Engineer
Enter Password
Common Devices
Test Sounder Beacon and Relay Outputs
Analogue Output
Test Analogue Outputs
Input Simulation
Simulate Gas Levels to confirm configuration
Gas Test Sensor
Select Channel and gas sensor with generator
Cal Due Date
Set Calibration Due Date
Reset Config
Reset Configuration

6.2 Menu Options

6.2.1 Channel

```
SELECT CHANNEL
1

PREV  NEXT  EXIT   GO
```

Using the PREV and NEXT buttons, select the desired channel (1 or 2) and press GO.

```
CHANNEL 1
Alarm Levels

PREV  NEXT  EXIT   GO
```

Further options related to that channel are now available.

Using the PREV and NEXT buttons, select the required option.

Options available are:

- Alarm Levels
  Set the level 1 and level 2 alarm points.
- Calibration
  Calibrate the sensor and analogue outputs.
- Sensor
  Set the gas type of the sensor fitted.

Select the desired option and press GO.

6.2.1.1 Alarm Levels

This option allows the levels at which the FGD15 will initiate an alarm to be set. Two alarm levels are available for each channel (L1 and L2).

```
ALARM
Level 1

PREV  NEXT  EXIT   GO
```

Using the PREV and NEXT buttons, select the desired alarm level (1 or 2) and press GO.

```
ALARM LEVELS Ch1
L1:    1.0ppm    Rising

 INC   DEC   EXIT  TOG
```

Using the INC and DEC buttons, select the required alarm point. Using the TOG button, select whether it is a Falling alarm or a Rising alarm.

If the normal background level of detected gas is lower than the alarm level that has been set, the Rising Falling option must be set to Rising. Similarly, if the normal background level of detected gas is higher than the alarm level, the Rising Falling feature should be set to Falling.

Once the alarm level has been correctly set, press the EXIT button. The standard confirmation screen will then be displayed.

6.2.1.2 Calibration

The calibration menu option allows the calibration of the sensor and the analogue output for the selected channel (refer to section 9 for further details).

6.2.1.3 Sensor

The FGD15 is compatible with a range of electrochemical toxic gas sensors. The sensor option allows the gas type to be selected and must be set to correspond with the sensor type fitted.

```
SENSOR OPTIONS Ch1
None

PREV   NEXT   EXIT    GO
```

Using the PREV and NEXT buttons, select the gas (sensor) type and press GO.

```
SENSOR SCALE
FSD       20ppm

 INC    DEC    OK
```

Using the INC and DEC buttons, select the sensor FSD (full-scale deflection) and press OK.

The system confirmation screen will then be displayed.

Warning
A calibration must be performed if a change is made using this feature. Changing the sensor type will restore the factory default settings. All previous calibration data will be lost.

6.2.2 Inhibit

The Inhibit option allows the user to indicate whether the system should respond to alarms or faults from a configured channel.

Note:
If the channel is never to be used, the sensor type should be set to None (section 6.2.1.3) permanently disabling the channel.

```
INHIBIT OPTIONS
→ Ch1 – no
  Ch2 – yes
TOG  NEXT  EXIT
```

Available options are: Inhibit Channel yes or no .
Press NEXT to alternate between Ch1 and Ch2,
Press TOG to alternate between yes and no .
Press EXIT to leave the Inhibit feature.

If changes were made, the system confirmation screen will now be displayed.

```
C1 0.0 ppm CL2
C2 0.0 ppm CL2        Off

                    MENU
```

If Inhibit is set to yes , then off will flash adjacent to the associated channel on the standard display screen to indicate that this channel is disabled.

Note:
No gas generator tests are performed on a channel that has been inhibited.

6.2.3 Data Logging

```
LOGGING OPTIONS
View Graph

PREV  NEXT  EXIT   GO
```

Using the PREV and NEXT buttons, select the desired option.

Options available are:

- View Graph
  Display the logged data as a graph.
- General Config
  Select memory size and logging frequency.
- Channel Config
  Select increased logging interval conditions.
- Clear log
  Clear the data log memory.

Select the desired option and press GO.

6.2.3.1 View Graph

The View Graph feature is designed to pictorially represent the gas levels that have been experienced and logged for each channel.

Note:
The limited resolution of the display makes it impossible for every small change in reading to be apparent in the displayed graph. However, all readings are accessible using the SHOW feature (see below).

```
SELECT CHANNEL
1

PREV  NEXT  EXIT   GO
```

Using the PREV and NEXT buttons, select the appropriate channel and press GO.

Using the and buttons, move the cursor to the point of interest on the graph. Press and hold the SHOW button.

```
26 / 02 / 02   08:47:33
 0.0  ppm
```

The display will then show all of the logged data associated with that position on the graph. When the SHOW button is released, the graph will reappear.

If the or buttons are held until the cursor is at the far left (or right) of the graph, the graph will redraw showing the previous (or next) batch of data.

6.2.3.2 General Config

The general config allows the basic operation of the data logging feature to be configured.

```
DATA LOG CONFIG
→ Memory   32   (k)
  Period   60   (mins)
 INC  DEC  EXIT  NEXT
```

Press NEXT to select Period.
Press INC or DEC to select how often a reading should be logged.
Press EXIT when required period has been set.

Memory refers to the size of the memory that has been fitted to the FGD15. Period refers to how often the instrument will log data under normal conditions.

When 32Kb of memory is fitted, there is sufficient storage for a maximum of 4000 records.

Note:
1. Do not adjust the Memory size from the factory setting.
2. When logging data, if the datalog becomes full, the oldest records will be overwritten.
3. The data logging frequency (or period) will increase when gas is being detected. Refer to section 6.2.3.3 for further details.

6.2.3.3 Channel Config

Under normal circumstance (zero-gas) the data log will take a reading at the interval selected in the General Config. The Channel Config allows us to apply a set of rules that allow us to log deviations in detected gas levels that occur regardless of the preset interval.

```
SELECT CHANNEL
1

PREV  NEXT  EXIT   GO
```

Using the PREV and NEXT buttons, select the channel to be configured and press GO.

```
DATA LOG CONFIG
→ Change    5%
  Minimum   0.3   ppm
 INC  DEC  EXIT  NEXT
```

Using the NEXT button, select either Change or Minimum.
Using the INC and DEC buttons, set the required levels.

If the detected gas level changes by *5%* or *0.3ppm* (whichever is the greater) from the last logged reading, a reading is logged immediately. The next reading that will be logged will be *60 minutes* from this reading unless the gas level changes in excess of the levels set in the Channel Config again.

Note:
The values used in the description above (*5%, 0.3ppm* and *60 minutes*) have been used for example only. All data logging intervals and logging rules are user configurable.

Set the data log configuration as required and press EXIT. The system confirmation screen will then be displayed.

6.2.3.4 Clear Log

This feature allows all logged data to be deleted.

```
LOG CLEAR OPTION

        WIPE   EXIT
```

Press EXIT to cancel the Clear Log feature or CLEAR to clear the data log.

```
WARNING
You are about to
erase logged data
 YES            NO
```

If CLEAR is pressed, a warning screen will prompt for erase confirmation. Press ES to clear datalog, or NO to abort.

```
CLEARING DATA LOG
```

Whilst the datalog is being cleared, a progress bar will be shown at the bottom of the display.

6.2.4 Gas Generator

A gas generator is available for use in conjunction with certain sensors. This allows a response test (or bump test) to be performed to confirm the operation of the sensor.

The operation of the gas generator is configured via this menu option.

```
GAS TEST TIMER
Date   23 / 02 / 2002

PREV  NEXT  EXIT    GO
```

Using the PREV and NEXT buttons, select the desired option.

Options available are:

- Date
  Adjust the date of the next bump test.
- Time
  Set the time of bump tests.
- Frequency
  Select how often the bump test should occur.
- Duration
  Set how long the bump test should last.
- Purge Time
  Set how long the purge time should last.
- Output
  Select the output current to the gas generator.
- Enable
  Select which channels have the gas generator enabled.

Select the desired option and press GO.

6.2.4.1 Date

This feature allows the user to specify (or check) the date of the next bump test. The date is automatically updated following each test according to the frequency that has been selected.

```
GAS TEST TIMER
Date:   23 / 02 / 2002
        ↑
 INC   DEC   EXIT   NEXT
```

Using the NEXT button to select day, month or year.
Use the INC and DEC buttons to alter the date.

Once the correct date has been entered, press EXIT. The system confirmation screen will then be displayed.

Note:
1. Gas generators should be configured to perform response tests during times where personnel are not working in the monitored area (e.g.Sundays, shift changes etc.).
2. If the instrument is switched OFF at the time a bump test was due to occur, the bump test will be initiated immediately after the instrument is switched ON.
3. To initiate a bump test immediately, decrement the year and then EXIT.

6.2.4.2 Time

This feature allows the user to specify (or check) the time at which the bump test will occur.

```
GAS TEST TIMER
Time:   08 : 00 : 00
        ↑
 INC   DEC   EXIT   NEXT
```

Use the NEXT button to select hours, minutes or seconds.
Use the INC and DEC buttons to alter the time.

Once the correct time has been entered, press EXIT. The system confirmation screen will then be displayed.

Note:
Gas generators should be configured to perform response tests during times where personnel are not working in the monitored area (e.g.Sundays, shift changes etc.).

6.2.4.3 Frequency

This feature allows the user to specify (or check) how often the bump test will occur.

```
GAS TEST FREQUENCY
Every      7  day(s)

 INC   DEC   EXIT
```

Using the INC and DEC buttons, select how frequent the test should occur.

Once the correct frequency has been entered, press EXIT. The system confirmation screen will then be displayed.

6.2.4.4 Duration

This feature allows the user to specify (or check) the maximum time allowed to perform the test.

```
GAS TEST DURATION
12 mins

 INC   DEC   EXIT
```

Using the INC and DEC buttons, select the maximum time allowed to perform the test.

Once the correct duration has been entered, press EXIT. The system confirmation screen will then be displayed.

Note:

1. The gas generator is always switched off as soon as the system detects gas in excess of the first alarm level regardless of the time set here. A purge time is then allowed (for the same duration) to allow the gas to dissipate. The purge time will end prematurely if the detected gas level falls below half of the first alarm level.
2. Do not set this time excessively high as no alarms will be generated whilst the test is being performed.
3. If the gas level detected does not reaches the first alarm level within the time set here, a fault condition will be raised.

6.2.4.5 Purge Time

This feature allows the user to specify (or check) the maximum time allowed to purge the sensor following a bump test.

```
PURGE DURATION
12 mins

 INC   DEC   EXIT
```

Using the INC and DEC buttons, select the maximum time allowed to purge the sensor.

Once the correct duration has been entered, press EXIT. The system confirmation screen will then be displayed.

Note:
1. The purge time will end prematurely if the detected gas level falls below half of the first alarm level.
2. Do not set this time excessively high as no alarms will be generated whilst the gas test or purge cycle is being performed.

6.2.4.6 Output

The current drive for the gas generator cell is adjustable via this feature. The output is selectable as a percentage of full-scale (typically 3mA) and is hardware limited such that it is not possible to select an output that would potentially damage the generator.

```
GAS TEST CURRENT
30%

 INC   DEC   EXIT
```

Using the INC and DEC buttons, select the required output.

Once the output has been entered, press EXIT. The system confirmation screen will then be displayed.

Note:
The output is typically set to 30 . However, this value may need to be increased dependent upon the installation environment.

6.2.4.7 Enable

This feature allows us to indicate whether gas generator cells are installed at each detector head.

```
GAS TEST ENABLE
None

        NEXT   EXIT
```

Using the NEXT button, set which channels have gas generators installed

Once the enabled generators have been selected, press EXIT. The system confirmation screen will then be displayed.

6.2.5 Clock

The FGD15 system has an inbuilt real time clock. It is important that the clock is correctly set so that data stored in the data log is meaningful.

```
CONFIGURATION
Time:   09 : 52 : 48

PREV  NEXT  EXIT    GO
```

Using the PREV and NEXT buttons, select the desired option.

Options available are:

- Time
  Adjust the current time.
- Date
  Adjust the current date.
- Format
  Select how the date is displayed.
- Auto Adjust
  Set a factor to allow automatic time correction.

Select the desired option and press GO.

6.2.5.1 Time

This feature allows the user to set the current time.

```
CLOCK SET UP
Time:   08 : 00 : 00
         ↑
 INC   DEC   EXIT  NEXT
```

Use the NEXT button to select hours, minutes or seconds.
Use the INC and DEC buttons to alter the time.

Once the correct time has been entered, press EXIT. The system confirmation screen will then be displayed.

6.2.5.2 Date

This feature allows the user to set the current date.

```
CLOCK SET UP
Date:   23 / 02 / 2002
        ↑
 INC   DEC   EXIT  NEXT
```

Using the NEXT button to select day, month or year.
Use the INC and DEC buttons to alter the date.

Once the correct date has been entered, press EXIT. The system confirmation screen will then be displayed.

6.2.5.3 Format

This feature allows the user to specify the way in which the date is displayed.

```
CONFIGURATION
Format    DD / MM / YYYY

       NEXT    EXIT
```

Using the NEXT button, select the required display format.

Once the required format has been selected, press EXIT. The system confirmation screen will then be displayed.

6.2.5.4 Auto Adjust

As with any clock, it is possible that the FGD15 clock will gain or loose time over several days or months. The auto adjust feature allows the user to add or subtract seconds just after midnight each day to reduce this error to a minimum.

```
CLOCK SET UP

Time Offset:   3 secs
  INC   DEC   EXIT
```

Using the INC and DEC buttons, indicate the error that is being experienced.

i.e. If the clock is loosing 2 seconds a day, set the offset to –2.

Once the required offset has been selected, press EXIT. The system confirmation screen will then be displayed.

6.2.6 Relays

The FGD15 is fitted with 5 relays for alarm indication. The operation of the relays depends upon how they are configured within this menu.

```
RELAY 1: CH1-L1
MODE  ENABLE LATCH
  n/e      yes       yes
PREV   NEXT   EXIT    GO
```

Using the PREV and NEXT buttons, select the relay requiring configuration and press GO.

```
RELAY 1: CH1-L1
MODE  ENABLE  LATCH
 →n/e      yes       yes
 TOG   NEXT   EXIT
```

Press TOG to toggle the selected option.
Press NEXT to select the next option.
Press EXIT to leave this feature.

If any change was made to the relay configuration, the system confirmation screen will then be displayed.

Mode: n e or n d

Refers to the healthy state of the relay, either normally energised (n e) or normally de-energised (n d).

Note:
The relay contacts are always shown on labels and within manuals with the relay in its de-energised state.

Enable: yes or no

Refers to whether the relay is to change state when alarms are detected.

Latch: yes or no

When a gas level is detected above an alarm point, the associated enabled relay will change state. When the detected gas level falls below the alarm point again, the relay will either return to its normal operating state (Latch no) or stay in the alarm position until the CLEAR button is pressed (Latch yes).

Note:
The fault relay can only be latched if a sensor fault is detected. If a mains fail fault (or bump test fault) is detected, the fault relay will not latch. It will always resume to its normal operating state automatically when mains supply is resumed (or a successful bump test is performed).

6.2.7 Contrast

The display contrast may be adjusted via this menu option.

```
LCD CONTRAST

 INC   DEC   EXIT
```

Using the INC and DEC buttons, set the display contrast.
Press EXIT to leave this feature.

If any change was made to the contrast, the system confirmation screen will then be displayed.

6.2.8 Backlight

The operation of the display backlight may be configured via this menu.

```
BACKLIGHT TIME
  5  Seconds

  INC   DEC   EXIT
```

Using the INC and DEC buttons, select the required backlight operation.
Press EXIT to leave this feature.

If any change was made, the system confirmation screen will be displayed.

The backlight options are:

- Always on.
- Always off.
- XX Seconds.
  Where XX represents how long in seconds the backlight will stay ON following any key press.

Note:
1. Always on, and always off options are available by attempting to select a time of less than 1 second.
2. Whilst a mains fail fault is detected, the backlight will be turned OFF if it had previously been set to always ON. If the backlight had been configured to stay on for XX seconds, it will continue to work as configured.

6.2.9 Power

The Power feature allows us to set a time period for which the detected gas reading is ignored following a power source changeover (i.e. the changeover from battery to mains power or vice-versa).

```
POWER DELAY TIME
  0  Seconds

  INC   DEC   EXIT
```

Using the INC and DEC buttons, select the required time.
Press EXIT to leave this feature.

If any change was made, the system confirmation screen will be displayed.

6.2.10 Password

This feature allows a new user password to be set.

ENTER PASSWORD 1 2 3 GO

Enter the required password (up to 8 numbers) and press GO.
The next screen will request “CONFIRM PASSWORD”. Enter the password again.

If the second password differs from the first, an error message will be displayed (Incorrect Password).
If both passwords were identical, the system confirmation screen will be displayed.

6.2.11 Engineer

The Engineer menu is provided for use by Status Scientific Controls personnel and provides a means of testing various hardware aspects of the system.

7 SENSOR/GENERATOR CONNECTIONS

The FGD15 is compatible with most 3-electrode electrochemical sensors.

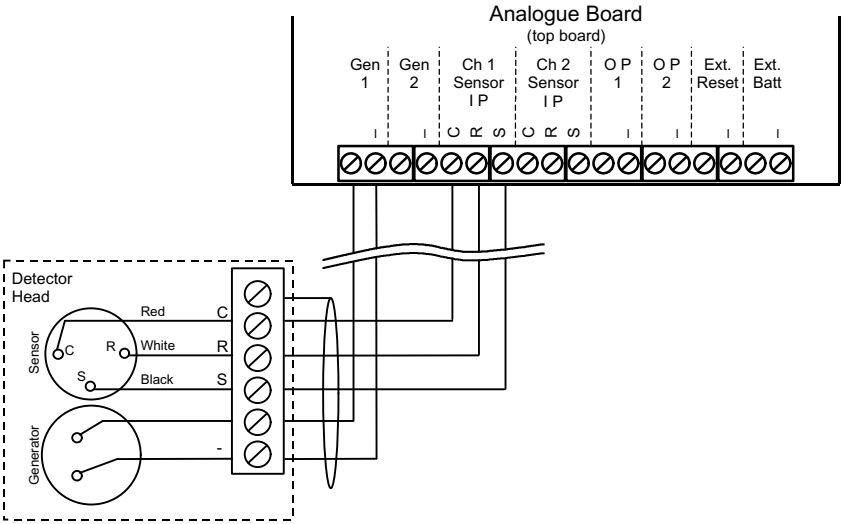

The diagram above shows the connections between the detector housing and the analogue board within the FGD15 enclosure. The detector head shown incorporates the gas generator cell, however this is not present in all detector heads.

Note:
1. The wiring shown above is to channel 1, wire channel 2 in an identical manner
2. Screened cable should always be used. Connect the screen of the cable at one end only.

8 ANALOGUE OUTPUT

The FGD15 has an analogue output available for each channel (O P1 and O P2). This is provided to allow retransmission of the levels detected by the attached sensors. The voltage current output provided, varies dependent upon the detected gas levels.

The analogue output mode is hardware selectable. The available options are:

- 4-20mA Current Sink
- 4-20mA Current source
- 1-5V Output

The required output configuration must be selected prior to calibrating the analogue output. The analogue board within the FGD15 enclosure has link switches fitted to allow easy configuration of the analogue outputs.

Note:
The analogue outputs must be calibrated before use.

8.1.1 Voltage Output

Remove the lower cover and switch ON SW1, SW3 and SW4 for the appropriate channel being configured.

This mode of output provides a 1-5V output directly proportional to the levels detected by the FGD15. It is not ideal for transmitting the signal over long distances due to voltage drop that will occur across the transmission cables.

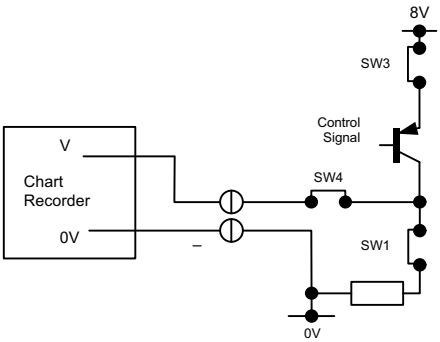

8.1.2 4-20mA Current Source

Remove the lower cover and switch ON SW3 and SW4 for the appropriate channel being configured.

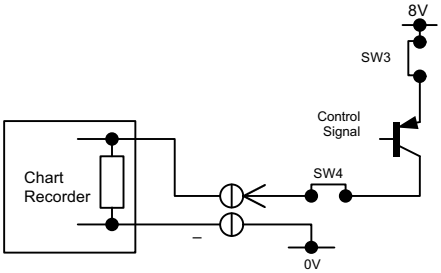

This mode of output provides a 4-20mA current source directly proportional to the levels detected by the FGD15. This transmission method is ideal for most applications, in particular applications having any significant distance between the FGD15 and the external equipment.

Note:
This mode is that of a current source
i.e. no power is required from external data logging equipment.

8.1.3 4-20mA Current Sink

Remove the lower cover and switch ON SW2 and SW5 for the appropriate channel being configured.

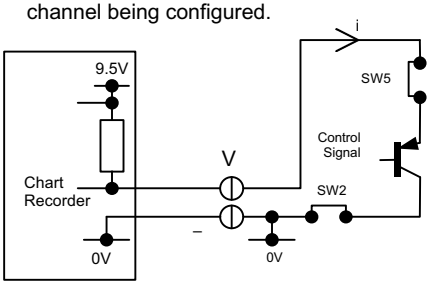

This mode of output provides a 4-20mA current sink directly proportional to the levels detected by the FGD15. This transmission method is ideal for most applications, in particular applications having any significant distance between the FGD15 and the external equipment.

The voltage at the point indicated by V must not exceed 9.5V.

Note:
This mode is that of a current sink
i.e. the loop power is provided by the external data logging equipment.

9 CALIBRATION

The FGD15 requires periodic calibrations. The frequency of which depend upon the application for which it is being used, however a calibration period of 6 months is advised.

In all cases a maximum period of 12 months should not be exceeded between calibrations.

The FGD15 must be calibrated following the installation of a new sensor. This is required due to the small variation in outputs provided by sensors.

9.1 Sensor Calibration

The accuracy of the instrument, and hence its ability to alert personnel of the possibility of a gas hazard are totally dependent upon the calibration that has been performed. A more successful calibration can be performed if the following notes are adhered to:

1. The ERO function must always be performed prior to a SPAN function.
2. The instrument should be switched ON and allowed to stabilise for a minimum of 30 minutes prior to a calibration. Sensors also require a settling time. The amount of settling time required depends upon the type of sensor fitted:

Status Stock No	Sensor type	Gas Type	Settling Time
270170	Sensoric CL2 3E 50 (044103217079)	Chlorine (Cl_2)	10 minutes

From the menu system:

- Select Channel and press GO.
- Select the channel number (1 or 2) and press GO.
- Press NEXT until Calibration is displayed, and press GO.
- Select Sensor and press GO.

```
CALIBRATION C1
ZERO
Reading   0.0
ZERO          NEXT
```

- Ensure the sensor is positioned in a zero-gas environment.
- Press ERO, wait for a minimum of 5 seconds.
- If the Reading is stable, press NEXT (if the reading is not stable, press ERO again and repeat as required).

```
CALIBRATION C1
SPAN: Gas = 15.0ppm
Reading   0.0
INC   DEC   EXIT   SPAN
```

- Using the INC and DEC buttons, set the concentration of the calibration gas (e.g. as above, Gas 15.0ppm).
- Apply the calibration gas and allow the sensor time to respond.
- Press SPAN, wait for a minimum of 5 seconds.
- If the Reading is stable, press EXIT (if the reading is not stable, press SPAN again and repeat as required).
  Note:
  Ensure the reading is correct and stable before pressing EXIT.
- The system confirmation screen will now be displayed. Press ES to accept the new calibration.
- Disconnect the calibration gas.

9.2 Analogue Output Calibration

The analogue outputs that have been provided have 12-bit resolution. However, without a valid calibration having been performed, the data that they transmit may be meaningless or misleading. A successful calibration can be performed if the following notes are adhered to:

1. The ERO function must always be performed prior to a SPAN function.
2. The instrument should be switched ON and allowed to stabilise for a minimum of 30 minutes prior to a calibration.

For greater accuracy, the analogue outputs should be calibrated in the mode in which they intend to be used.

From the menu system:

- Select Channel and press GO.
- Select the channel number (1 or 2) and press GO.
- Press NEXT until Calibration is displayed, and press GO.
- Select Analogue Output and press GO.

- The displayed reading is not the actual reading as detected by the instrument. It is the reading that corresponds to the instrument providing an output of 4mA (1V).

```
CALIBRATION C1
4mA / 1V
Reading   0.0
INC    DEC      NEXT
```

- Connect an ammeter (or voltmeter – dependent upon output configuration) to the analogue output terminals and monitor the current (or voltage).
- Using the INC and DEC buttons, set the analogue output to 4mA (1V).
- Press NEXT.
- The displayed reading is not the actual reading as detected by the instrument. It is the reading that corresponds to the instrument providing an output of 20mA (5V).

```
CALIBRATION C1
20mA / 5V
Reading   20.0
INC   DEC    EXIT
```

- Using the INC and DEC buttons, set the analogue output to 20mA (5V).
- Press EXIT.
- The system confirmation screen will now be displayed. Press ES to accept the new calibration.

Note:
The analogue output indicates a fault condition by drawing a current of less than 2mA (0.5V in voltage output mode). An over range condition is indicated by the analogue output drawing of current greater than 22mA (5.5V in voltage output mode).

10 RS232 COMMUNICATIONS

10.1 Mentor PC

Mentor PC is a software application that allows remote interrogation of the FGD15. The cable required to connect between the FGD15 and the PC is also available from Status Scientific Controls, however the connection diagram is shown below:

9-Way D-Type Plug (FGD15)	25-Way D-Type Socket (PC)	9-Way D-Type Socket (PC)
2	3	2
3	2	3
5	7	5

10.2 Reprogramming

If for any reason the firmware within the FGD15 requires updating, this can be performed in the field using a software utility available from Status Scientific Controls. The same connecting cable is utilised as that used for Mentor PC communications.

To reprogram the system:

- Reset the system, and enter *boot mode* as follows:
  - Press and hold buttons 3 & 4 together.
  - Press and then release button 1.
  - The system will reset
  - Whilst the reset is being performed, press button 2.
  - Release all buttons.
- Check the communications speed (baud rate) of the FGD15.
  - Press MENU
  - Press CHANGE until the desired baud rate is displayed.
  - Press SET.
- Confirm that the programming software has the same baud rate selected (refer to Programming Utility manual).
- Program the FGD15. On completion of programming, the FGD15 will reset.

Note:

1. The configuration of the instrument is normally not corrupted during programming, however it is prudent to record the configuration of important features to allow re-configuration if necessary.
2. If communication errors are encountered, reduce the baud rate of the FGD15 and programming utility.

11 ROUTINE MAINTENANCE & SERVICING

The FGD15 Environmental Monitor will provide reliable and fault free service when given regular maintenance and calibrations.

11.1 Routine Inspection and Maintenance

It is advisable to periodically inspect the FGD15 Monitor:

Clean detector heads using a clean DAMP cloth.
Inspect the sensor and ensure it is sound and the sensor-housing aperture is not obstructed (where applicable).

The maximum time interval between routine inspections should be assessed by the calibrating personnel and will depend upon the environment in which the equipment is installed.

12 FGD15 SPARES LIST

The FGD15 range of spares and replacements consists of:

Description	Stock No.
FGD15 Spare Enclosure – Colour ellow, Portacel Labelling, complete with Window, Gasket & Fixings	CA490-POR
FGD15 Spare Sensor Enclosure – Colour ellow, Portacel Labelling, complete with Gasket	CA491-POR
FGD15 Sensor Housing excluding Sensor & Generator	CA492
FGD15 CL2 Sensor Generator Assembly complete	CA493
FGD15 CL2 Sensor Assembly complete, excluding Generator	CA494
FGD15 MCU PCB Assembly complete with Display	PC210
FGD15 Power Supply Unit PCB Assembly	PC211
FGD15 Dual Toxic PCB Assembly	PC212
Chlorine Sensor – Sensor 4 Series	270171
Chlorine Generator Cell	270300
Sealed Lead Acid Battery	250030

Fuse – Antisurge 1A, 20mm (FS1 & FS2)	160060
Fuse – Antisurge 500mA, 20mm (FS3)	160059

PORTACEL
OPERATING MANUAL

KENNET
TRIPLE VALIDATION MONITOR

CONTENTS

SECTION 1 – INTRODUCTION TO THE MANUAL **Page**

1.1 Scope of the Manual 6

SECTION 2 – SAFETY

2.1 General 6

SECTION 3 – PURPOSE OF THE MONITOR

3.1 General 6

SECTION 4 – THE MONITOR

4.1 Principles used in the Monitor 6
4.2 Description of the Monitor 7
4.3 Technical Data 10
4.4 The Monitor in Operation 11

SECTION 5 – INSTALLATION AND COMMISSIONING

5.1 Installation 13
5.2 Commissioning 17

SECTION 6 – OPERATING THE MONITOR

6.1 General 20
6.2 Equipment Alert LED s 20
6.3 Equipment Alarm LED s 20
6.4 Process Alarm LED s 21
6.5 Isolating an Analyser 21

SECTION 7 – FAULT INDICATION

7.1 Fault Indication Chart 22

SECTION 8 – SERVICE SCHEDULE

8.1 General 23

SECTION 9 – MAINTENANCE SCHEDULE

9.1 General 23

SECTION 10 – TRANSPORTATION

10.1 General 23

SECTION 11 – STORAGE

11.1 General 23

SECTION 12 – SPARES

12.1 General 23

ILLUSTRATIONS

Fig.1 The Kennet Triple Validation Monitor 5

Fig.2 Front Panel 8

Fig.3 Disposition of PCB s 9

Fig.4 Electrical Connections 12

Fig.5 Power Board 14

Fig.6 Display Board 14

Fig.7 Detector Board 15

Fig.8 Alert and Alarm LED s 16

ONLY NAMAS APPROVED CALIBRATION INSTRUMENTS SHOULD BE USED WHEN WORKING ON THE KENNET TRIPLE VALIDATION MONITOR

FAILURE TO DO SO MAY INVALIDATE WARRANTY

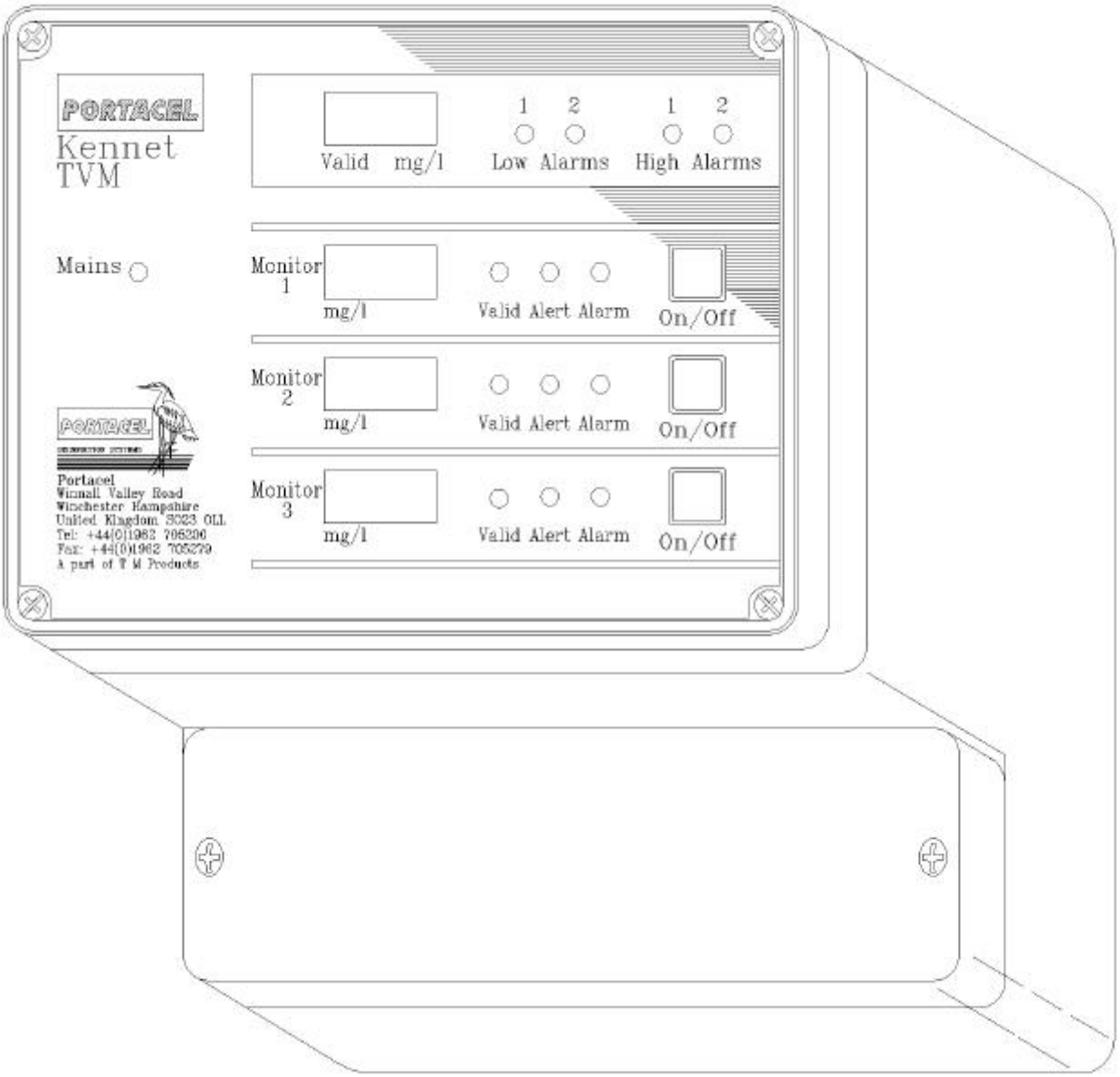

Fig.1 The Kennet Triple Validation Monitor

PORTACEL KENNET TRIPLE VALIDATION MONITOR

SECTION 1 – INTRODUCTION TO THE MANUAL

1.1 Scope of the Manual

1.1.1 This manual is intended to enable an operator to install, commission and operate the Portacel Kennet Triple Validation Monitor (TVM) and also understand and act upon the Information that it relays.

SECTION 2 – SAFETY

2.1 General

2.1.1 The monitor is a 110V 240V mains operated system. Before any maintenance or repair is undertaken the Monitor must be isolated from the electrical supply. Tests should be carried out to ensure that isolation has been achieved.

SECTION 3 – PURPOSE OF THE MONITOR

3.1 General

3.1.1 To ensure that water leaves the Treatment Works with the precise level of Chlorine at all times, sophisticated analytical equipment is required.

3.1.2 The Kennet TVM provides consistent analysis together with a high level of accuracy and reliability.

3.1.3 The Kennet TVM monitors the signals from three analysers which allows three separate samples to be taken from the water source. The Monitor analyses the signals and produces one highly accurate single validated signal.

SECTION 4 – THE MONITOR

4.1 Principles used in the Monitor

4.1.1 The Monitor receives signal readings of Chlorine residual from each of the three analysers with respect to the target Chlorine residual required from the particular plant.

4.1.2 When the three analysers are each signalling readings within accepted limits, the Monitor computes a value based on the three analyser signals and displays it as the validated reading. This validated reading becomes a more accurate assessment of the Chlorine residual passing at that moment.

4.1.3 If,

a) The reading from any one or two of the analysers differs from the validated reading by more than a previously accepted amount, it will

register an equipment alert or alarm – depending upon the degree of discrepency – against the analyser in question.

b) the three analyser signals are outside the accepted limits, an equipment alert or alarm will be given as before and the closest signals will be computed to give the validated reading.

4.1.4 The Monitor then compares the validated reading with the target value of Chlorine residual. If the validated reading differs from the target value by more than a previously accepted amount, the Monitor will give a process alert or alarm, as appropriate, of low or high residual Chlorine leaving the plant.

4.2 Description of the Monitor

4.2.1 The Monitor consists of a housing as shown in FIG.1 – KENNET TRIPLE VALIDATION MONITOR containing three PCB s. (See FIG.3 – DISPOSITION OF PC BOARDS)

4.2.2 The front face of the housing is a panel which carries the displays and controls. (See FIG.2 – FRONT PANEL)

4.2.3 The layout of the front panel is in four rows.

4.2.4 The top row contains an LCD readout display for the validated reading given in mg l, and two pairs of process alarm LED s.

4.2.5 The left hand pair indicate low and excessively low, or low low , levels of Chlorine.

4.2.6 The right hand pair indicate high and excessively high, or high high , levels of Chlorine.

4.2.7 The second, third and fourth rows relate to each of the three analysers, the signal from which the Monitor is validating. The layout of each of the three rows is the same.

4.2.8 Each row contains an LCD display giving the reading in mg l from the individual analyser, a green Valid LED, an amber Alert LED, a red Alarm LED and an ON OFF Press Button by which the particular analyser may be isolated, switched in, or reset.

4.2.9 To the left of the displays and controls is a Mains ON Indicator LED.

4.2.10 The input and output electrical connections are housed within the lower part of the housing. (See FIG.1 – KENNET TRIPLE VALIDATION MONITOR)

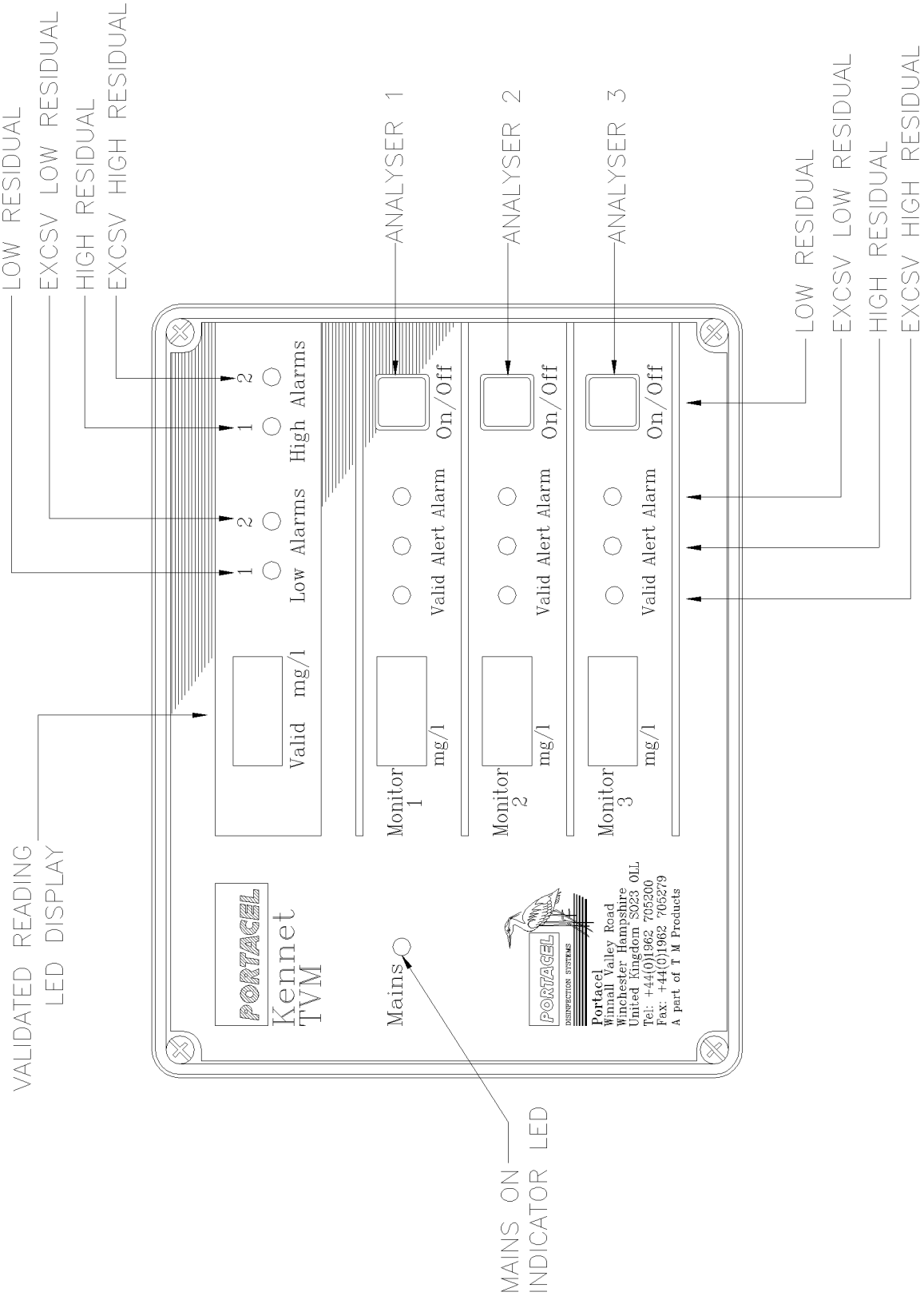

Fig.2 Front Panel

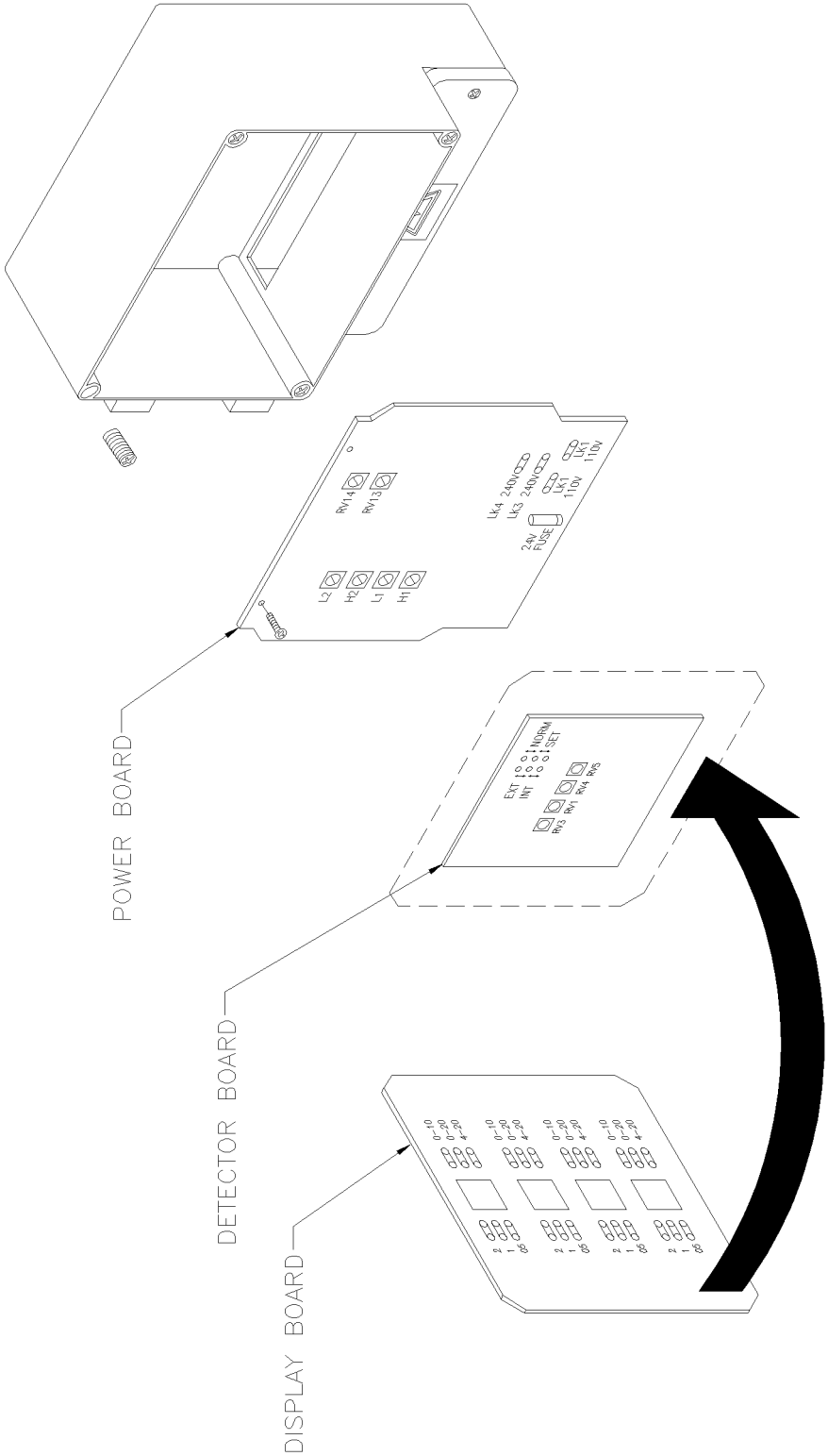

Fig.3 Disposition of PCB s

4.3 Technical Data

4.3.1	Dimensions:	220mm wide x 231mm high x 112mm deep
4.3.2	Fixing:	6 Screws
4.3.3	Weight:	1.8 Kg
4.3.4	Mains Supply:	110 240V 50 60Hz or 24V DC 1A
4.3.5	Power Consumption:	6 VA
4.3.6	Impedance:	180 ohm input
4.3.7	Input:	4-20 or 0-10 or 0-20 mA
4.3.8	Output:	Isolated 4-20 or 0-10 or 0-20 Ma
4.3.9	Range:	0 – 0.5 or 0 – 5.0 mg l 0 – 1.0 or 0 – 10.0 mg l 0 – 2.0 or 0 – 20.0 mg l
4.3.10	Working Temperature:	0° – 45°C
4.3.11	Accuracy	Better than 1 of F.S.D. (Input Output):
4.3.12	Resolution:	0.001 mg l (0 – 1.0 mg l range)
4.3.13	Validated Signal Update:	4 seconds
4.3.14	Process Alarm - (Volt Free) n c or n o on alarm:	Adjustable 2 x LOW 2 x HIGH (Two 0 – 60 min timed output)
4.3.15	Equipment alarm - (Volt Free) n c or n o on alarm:	Alarm (1 x signal out validation) - Adjustable 1 – 10 Alarm (2 x signals out of validation)
4.3.16	Non-Valid Signal	Adjustable value which will be retransmitted in the event of all three cells being taken out of service. Will also generate equipment alarm.
4.3.17	ON OFF Control:	To each channel permitting individual channel service without loss of automatic control.
4.3.18	Tracking Accuracy Between Channels	Better than 0.015 mg l over 0 – 1 mg l range.

4.4 The Monitor in Operation [See FIG.2 – FRONT PANEL]

4.4.1 One of the three LED s beside each analyser LCD display will always be illuminated as follows:

a) Green Valid LED illuminated if the reading from the particular analyser is accepted as valid or is available for use in validation.

b) Amber Alert LED illuminated if that analysers reading is sufficiently outside the preset limits of the validated reading to warrant an alert.

c) Red Alarm LED illuminated if the reading is so far out as to require the analyser to be switched out and the cause investigated.

4.4.2 Of the two pairs of Process Alarm LED s next to the validated reading display, the Low Alarm 1 LED will light up, when the validated reading for residual Chlorine level is low and the Low Alarm 2 LED when the level is excessively low. The High Alarm 1 LED will light up when the residual Chlorine level is high and the High Alarm 2 LED when the level is excessively high.

4.4.3 The amount by which the validated reading is allowed to deviate from the target value of residual Chlorine before prompting one of the low, excessively low, high or excessively high process alarm LED s is set on, and may be adjusted after, installation of the Monitor.

4.4.4 The four low or high process alarms are the only indication of erratic residual Chlorine condition displayed on the Monitor. However, connections are available on the Monitor from which each of the alarms can be repeated elsewhere and or the plant be shut down.

4.4.5 Each of the three analysers can be isolated, the Monitor at any time by means of the accompanying ON OFF push button. Likewise, the analyser can be switched back in with the same button.

4.4.6 If one of the analysers is isolated, the Monitor will produce a validated reading from those of the remaining two analysers.

4.4.7 If two analysers have been isolated, the reading from the one remaining analyser will be copied and displayed as the validated reading and will still initiate any process alarms as necessary.

4.4.8 The amount by which a reading from an analyser can be allowed to deviate from the validated reading before activating an alert or alarm indication is set at factory. This will be _ 10 for an amber Alert indication and _ 20 for a red Alert indication.

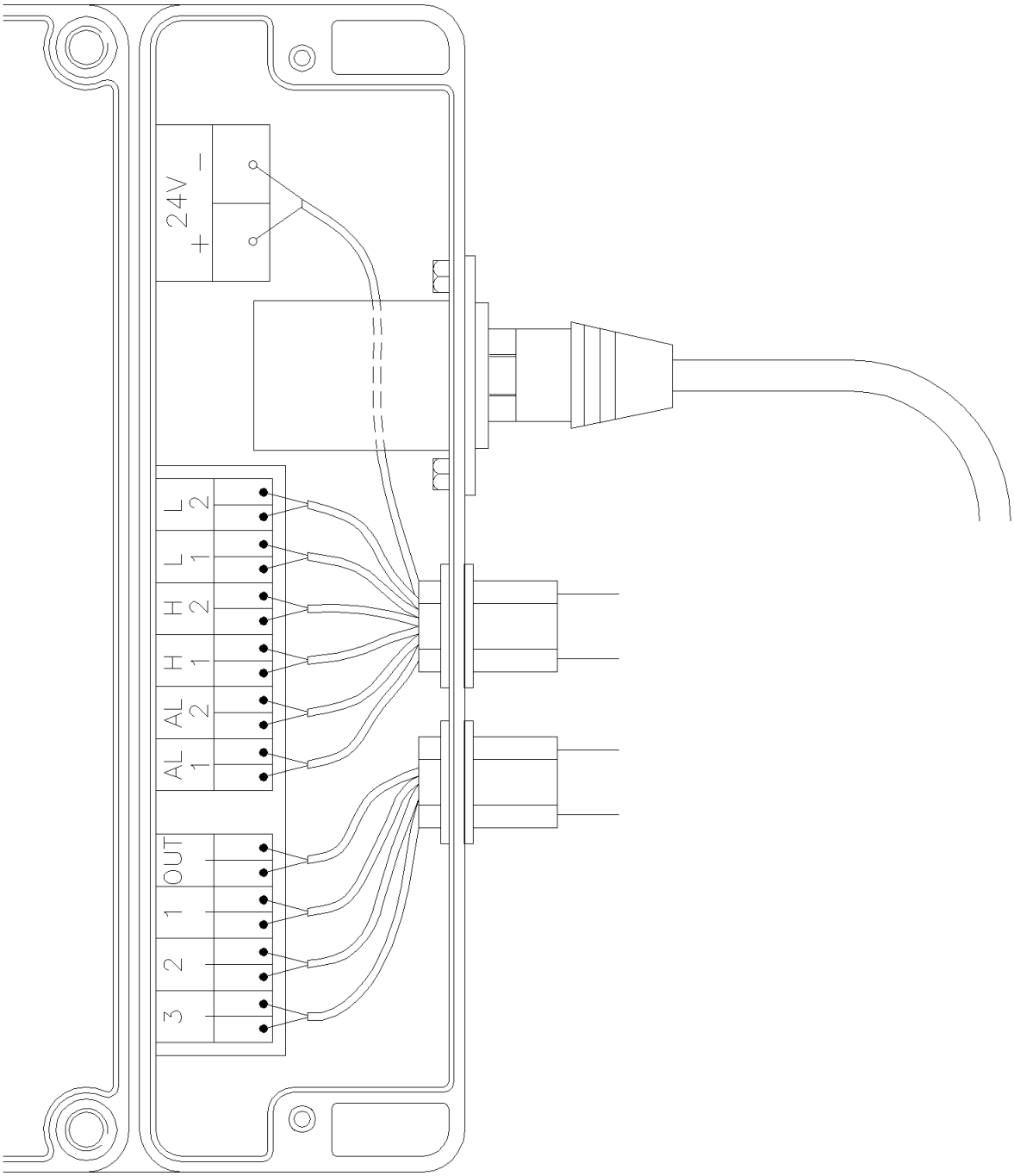

Fig.4 Electrical Connections

5 INSTALLATION AND COMMISIONING

5.1 Installation

5.1.1 If at all possible, ensure that the Monitor is mounted in an electrically noise free area.

5.1.2 Ensure that the Monitor is installed with a mains isolator fitted into its mains electrical supply.

5.1.3 To mount the Monitor, remove the four screws securing the front panel, and the two screws securing the connection box cover to the housing.

5.1.4 Lift off the panel and the cover and use the same holes from which the panel screws were removed to position and fix the mounting screws.

5.1.5 Fix the Monitor into position with screws of up to 4.5mm dia ensuring that it is mounted level on a flat surface.

5.1.6 Make the electrical connections according to FIG.4 – ELECTRICAL CONNECTIONS.

5.1.7 The connections are marked and should be connected as follows:

a) 3 and – to analyser No.3.
b) 2 and – to analyser No.2.
c) 1 and – to analyser No.1.
d) Out and – to External validated signal repeat.
e) AL1 to remote analyser alert signal repeat.
f) AL2 to remote analyser alarm signal repeat.
g) H1 to remote high residual Chlorine alarm repeat.
h) H2 to remote excessively high residual Chlorine alarm repeat.
i) L1 to remote low residual Chlorine alarm repeat.
j) L2 to remote excessively low residual Chlorine alarm repeat.
k) 24V to Auxiliary DC supply if available.
l) Plug and socket to mains live, neutral and earth.

5.1.8 Replace the connection box cover and secure it with the two cover screws.

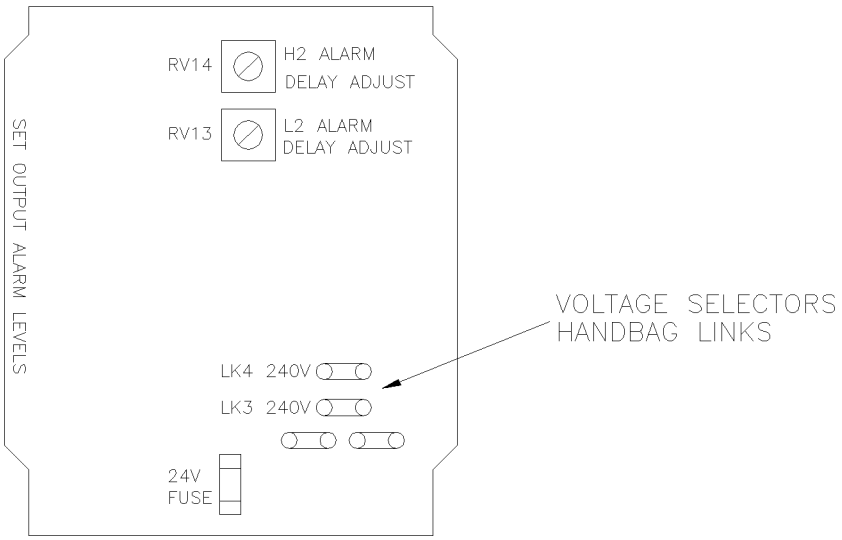

Fig.5 Power Board

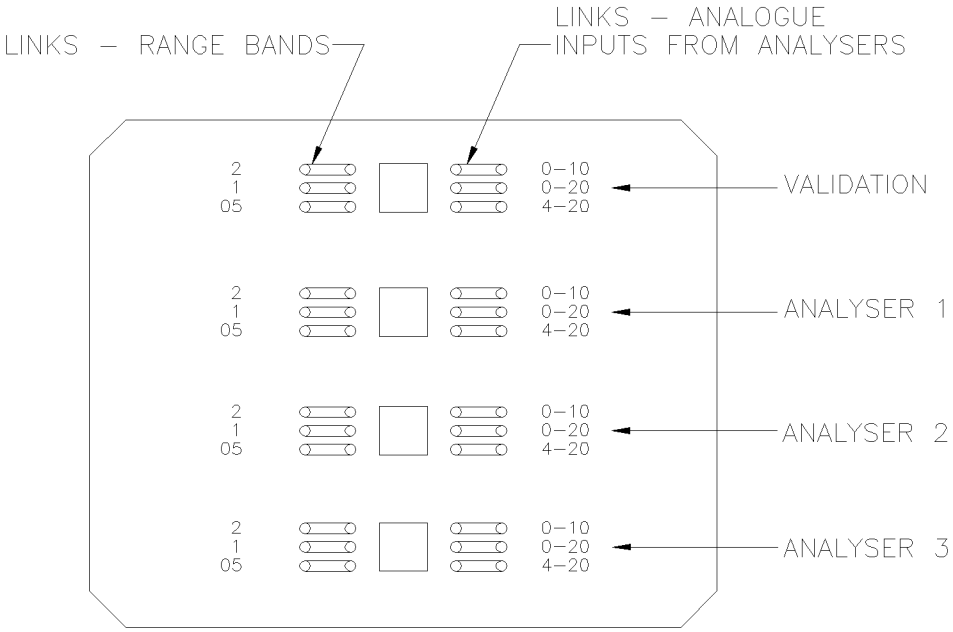

Fig.6 Display Board

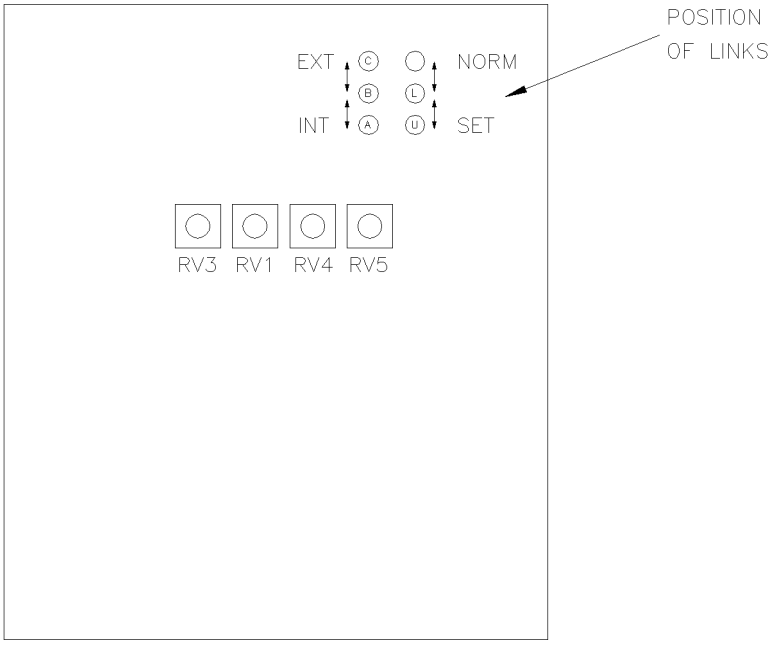

Fig.7 Detector Board

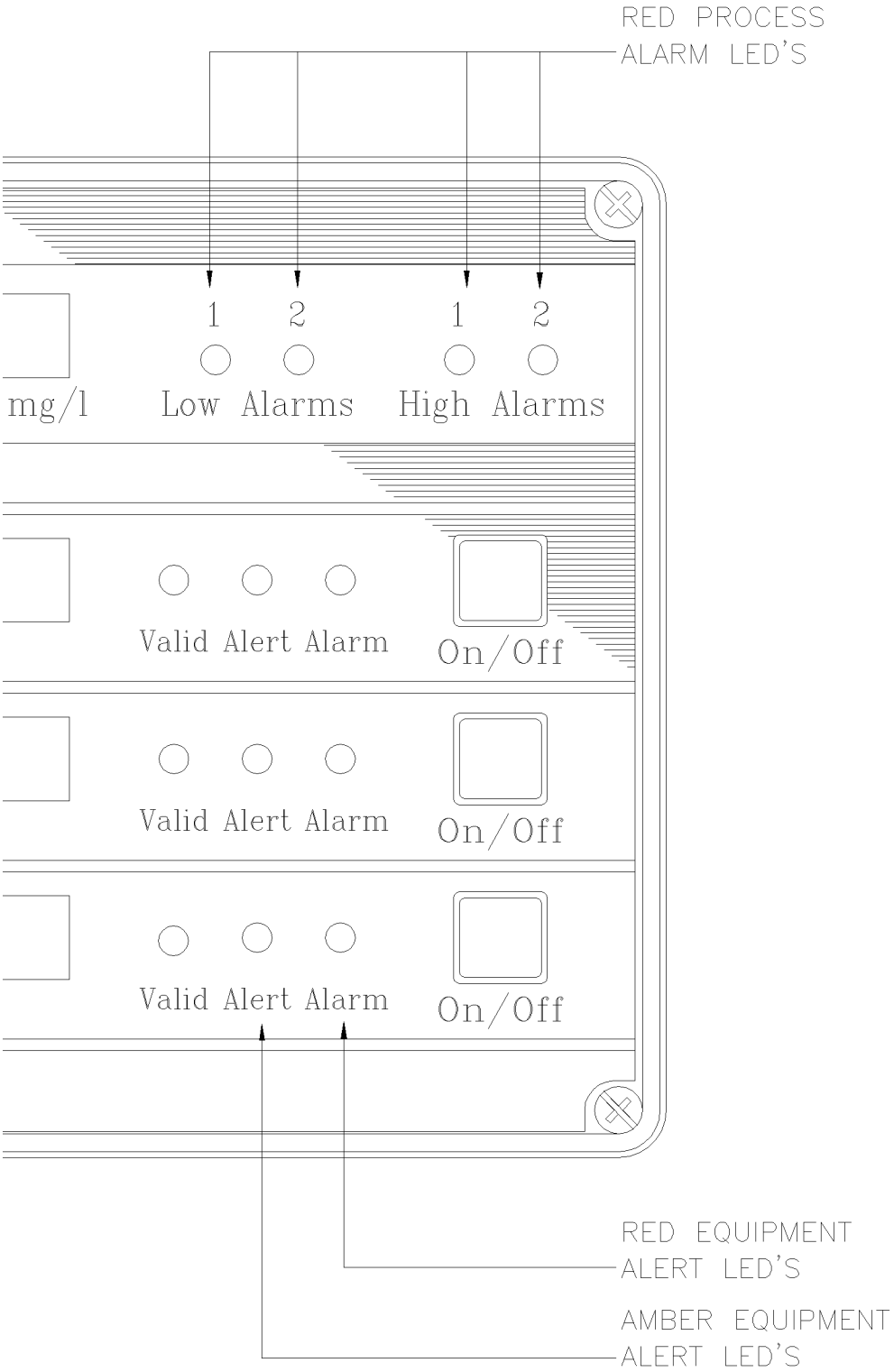

Fig.6 Alert and Alarm LED s

5.2 Commissioning

5.2.1 The analysers should have been commissioned, calibrated, running and stabilised before the Monitor is commissioned.

5.2.2 Check that the correct mains AC voltage supply is available.

5.2.3 The Monitor will operate on either 110V or 240V supply and the handbag links on the Power Board should be positioned in LK1 and LK2 for 110V supply or LK3 and LK4 for 240V supply. (See FIG.5 – POWER BOARD)

5.2.4 Check that the analogue inputs from all of the analysers fall into one of the following ranges as determined by site requirements.

a) 0 – 10 mA
b) 0 – 20 mA
c) 4 – 20 mA

5.2.5 Reverse the front panel to reveal the Display Board, and the range band and analogue input bridging links will be found as in FIG.6 – DISPLA BOARD.

5.2.6 Reposition the analogue input links to connections appropriate to the inputs from the analysers as determined in Para 5.2.4 above. All four sets of links for the three analysers and validation displays must be in the same setting positions.

5.2.7 Determine the range band to which the Monitor is to operate for the particular site, and reposition each of the range band links into one of the following ranges for each analyser and validation positions:

a) 0 – 2
0 – 1
0 – 0.5

b) 0 – 20
0 – 10
0 – 5

The Monitor will have been equipped at factory with range bands (a) or (b) appropriate to the particular site application.

5.2.8 As with the analogue input links, the four range band links must be positioned to give the same values.

5.2.9 In most cases these bridging link positions will have been set at the factory, and if this is so the fact will be supplied with the Monitor.

5.2.10 With the mains supply off, position the output source selector bridging link to Set (D – E). (See FIG.7 – DETECTOR BOARD). This link will be found at the top of the Detector Board.

5.2.11 Place a link in the int position (A – B) to set the interval output levels at which the process alarm LED s and any external equipment such as remote alarms and recorders are to be activated and switch on the mains supply.

5.2.12 RV5 which is also on the Detector Board is adjusted in conjunction with RV9, RV10, RV11 and RV12 which are found on the Power Board (See FIG.5 – POWER BOARD).

5.2.13 Rotate the control on RV5 to adjust the validated reading display to the value at which the Low process alarm is to be activated.

5.2.14 Rotate the control on RV9 very carefully to the position at which the Low Alarm 1 LED just comes on. (See FIG.8 – ALERT AND ALARM LED s)

5.2.15 Rotate the control on RV5 to adjust the validated reading display to the value at which the Excessively Low process alarm is to be activated.

5.2.16 Rotate the control on RV10 very carefully to the position at which the Low Alarm 2 LED just comes on.

5.2.17 Rotate the control on RV5 to adjust the validated reading display to the value at which the High process alarm is to be activated.

5.2.18 Rotate the control on RV11 vary carefully to the position at which the High Alarm 1 LED just comes on.

5.2.19 Rotate the control on RV5 to adjust the validated reading display to the value at which the Excessively High process alarm is to be activated.

5.2.20 Rotate the control on RV12 very carefully to the position at which the High Alarm 2 LED just comes on.

5.2.21 Rotate the control on RV13 to adjust the delay of alarm L2. The minimum delay possible is 0 minutes and the maximum, by rotating fully clockwise, is 60 minutes. The delay set is proportional to the rotation, that is to say that half the rotation possible from fullyanti-clockwise to fully clockwise will set a delay of 30 minutes.

5.2.22 Similarly, rotate the control on RV14 to set the delay of alarm H2.

5.2.23 When the process alarm LED s have been set, switch off the mains and return the bridging link to its original normal position (E – F).

5.2.24 The equipment Alert LED s are factory preset to _ 10 and the equipment Alarm LED s to _ 20 of the valid signal expected from the analysers and do not require to be set when commissioning the Monitor.

5.2.25 When these adjustments are complete, ensure that the inter-board cable connectors are coupled securely and that the multi-cables will not interfere with other components as the boards are replaced.

5.2.26 Replace the Front Panel and secure with the panel fixing screws.

5.2.27 Switch on the mains supply and leave for approximately 5 mins for the Monitor to stabilise.

5.2.28 When the Monitor is initially switched on some or all of the LED s may register alarms.

5.2.29 If this happens, the Monitor requires to be reset. To do this:

a) Switch the mains supply off then on again after five seconds,

b) Press each Analyser ON OFF button **TWICE**.

5.2.30 After resetting the Monitor, each analyser green LED will come on providing that the signals being generated by the three analysers are within limits.

5.2.31 If any green LED does not come on, then the analyser in question will require to be re-calibrated. (Refer to Analyser Instruction Manual)

6. OPERATING THE MONITOR

6.1 General [See FIG.8 ALERT AND ALARM LED's]

6.1.1 While the Monitor is in operation the validated reading continuously indicates the value of the residual Chlorine being dosed by the plant.

6.1.2 In the normal condition all four LCD displays will be giving similar readings.

6.1.3 So long as there are only green Valid LED s on display and no other alert or alarm LED s showing, any discrepancy of the four readings can be accepted as the Monitor serving its purpose, namely, to give:

a) A Chlorine residual value reading from each analyser.

b) The validated reading of Chlorine residual derived from the three individual analyser readings.

6.2 Equipment Alert LED's

6.2.1 When an external alarm, is fitted, is activated, the analyser giving the invalid signal which has activated the alarm can be determined from the amber Alert LED that is showing.

6.2.2 It should be noted that in time that may elapse between the alarm sounding and the analyser being attended to, it is possible for the analyser to correct itself but the amber Alert LED will still be showing. It is advised that a check is made of the analyser to ensure that there is no potential fault.

6.2.3 If the particular analyser corrects itself within 30 seconds from actuating the Alert LED, the LED will go out.

6.2.4 If the analyser does not correct itself within the 30 seconds then the LED is locked on and will stay on even after the analyser has been corrected.

6.2.5 When any fault has been rectified, the alert LED can be reset by pressing the analyser ON OFF button **TWICE**.

6.2.6 If alert LED s of two analysers are showing, either simultaneously or consecutively, the validated reading should no longer be relied upon. It is suggested that the plant is shut down and the cause ascertained, because the situation could well be the result of plant dosing equipment failure.

6.3 Equipment Alarm LED's [See FIG.8 – ALERT AND ALARM LEDs]

6.3.1 The equipment red Alarm LED s will show, after 0 – 60 min preset delay, if an analyser signal varies substantially from the validated signal. The particular analyser is prevented from being used in the validation process until rectified and the LED reset by pressing the analyser ON OFF button **TWICE**.

6.3.2 If the ON OFF switch is activated too quickly before the red Alarm of an analyser has recovered, then the validated signal will take the lowest value, omitting the two good analysers and therefore will give false readings and fail.

6.4 Process Alarm LED's

6.4.1 The process Alarm LED s indicate, after 0 – 60 min preset delay, if the Chlorine residual in the water passing the analysers is too low or too high.

6.4.2 The low and high process Alarm LED s reset themselves automatically when the fault has been corrected.

6.4.3 The excessively low and excessively high process Alarm LED s can be reset after a process fault correction by switching off the Mains supply and switching it back on after 5 seconds.

6.4.4 This will also mean that each of the three analyser ON OFF buttons will have to be pressed **TWICE** to reset the analyser Alert and Alarm LED s.

6.5 Isolating an Analyser

6.5.1 If it is required to isolate an Analyser from the Monitor, this can be done by pressing **ONCE** the ON OFF button for the particular Analyser.

6.5.2 When an analyser is switched out in this way, no alarm signal will be generated.

6.5.3 Should it be necessary to isolate a second analyser by pressing its ON OFF button **ONCE**, no further equipment alarm will be given if a fault occurs in the remaining analyser. The only alarm that could be further activated by the remaining analyser is a process alarm for high or low residual Chlorine.

7. FAULT INDICATION

7.1 Fault Indication Chart [See FIG.8 – ALERT AND ALARM LED's]

LED STATUS	FAULT INDICATION	ACTION
One Amber Equipment Alert LED illuminated	Analyser reading more Switch out analyser. than _ 10 divergence	Investigate fault in analyser. from validated reading. Rectify and reset.
Two Amber Equipment Alert LED s illuminated	Analyser reading more than _ 10 divergence from validated reading	Shut down plant. Switch out analyser. Investigate fault in analyser or dosing rate. Rectify and reset.
One Red Equipment Alarm LED illuminated	Analyser reading more than _ 20 divergence from validated reading	Switch out analyser. Investigate fault in analyser. Rectify and reset.
Two Red Equipment Alarm LED s illuminated	Analysers reading more than _ 20 divergence from validated reading.	Shut down plant. Switch out analysers Investigate fault in analyser or dosing rate.
One Red Process Low or High Alarm LED illuminated	Residual Chlorine accordingly low or high	Investigate dosing rate.
One Red Process Excessively Low or Excessively High Alarm LED illuminated	Residual Chlorine accordingly excessively low or excessively high	Shut down plant. Investigate dosing rate.

8. SERVICING SCHEDULE

8.1 General

8.1.1 No regular servicing of the Monitor is required.

9. MAINTENANCE SCHEDULE

9.1 General

9.1.1 No regular maintenance of the Monitor is required. However, there are two fuses incorporated into the Monitor s circuitry that could be checked:

a) A mains 500 mA fuse in an external tray pulled out from under the mains supply multi-connector.

b) A 24V 500mA fuse in the bottom right hand corner of the power board.

10. TRANSPORTATION

10.1 General

10.1.1 Should it be necessary to move the Monitor from one site to another, ensure that it is first isolated and disconnected from all external electrical connections and carefully taken down from its position.

10.1.2 The Monitor should be packed for transit in robust packing which will protect it from excessive moisture and from shocks.

11. STORAGE

11.1 General

11.1.1 The Monitor should be stored, either before installing or after dismounting above floor level in a building with a clean, temperature controlled environment of around 20°C.

11.1.2 Keep the Monitor well away from corrosive chemicals.

12. SPARES

12.1 General

12.1.1 There are no consumable items in the Monitor for which spares need to be held apart from the fuses.

500 mA Fuse for 240 or 24V Part No. FB277

Liquid Vacuum Regulator

OPERATING AND MAINTENANCE MANUAL

Part No 41377

Issue 2
May 2001

Portacel
Winnall Valley Road,
Winchester,
Hampshire, SO23 0LD,
United Kingdom.

Tel: 44 (0) 1256 896966
Fax: 44 (0) 1962 705279

CONTENTS

Amendment Record

Introduction

Safety

Chapter 1: General Description

Introduction
1. Leading Particulars
2. Purpose
3. Principle of Operation

Chapter 2: Technical Description

Introduction
1. Principal Components
2. System Integration

Chapter 3: Installation

1. General
2. Installing the Liquid Vacuum Regulator(s)

Chapter 4: Maintenance

Introduction
1. General
2. Removal and Replacement
3. Service of Liquid Vacuum Regulator(s)
4. Spare Parts

AMENDMENT RECORD

Amendment No	Date	Signature

Chapter 1

General Description

Contents

Para.		Page
	INTRODUCTION	**2**
1.	**LEADING PARTICULARS**	**3**
1.1	Dimensions	3
1.2	Weight	3
1.3	Connections and Operating Environment	3
1.4	Delivery Capacities	3
2.	**PURPOSE**	**4**
3.	**PRINCIPLE OF OPERATION**	**4**

ILLUSTRATIONS

Fig. No.		Page
1-1	Liquid Vacuum Regulator Operation	5

INTRODUCTION

This Manual contains the information on the Liquid Vacuum Regulator, its Operation and Maintenance. The manual refers to the use of this unit within Sodium Hypochlorite and Sodium Bisulphite.

The capacities covered within this Manual are:

a) 100L H Liquid Vacuum Regulator (440 US gpd)
b) 500L H Liquid Vacuum Regulator (2200 US gpd)

WARNING:

THIS EQUIPMENT IS DESIGNED FOR USE WITH SODIUM HYPOCHLORITE AND SODIUM BISULPHITE ONLY.

USE WITH OTHER CHEMICALS UNLESS OTHERWISE ADVISED BY PORTACEL, DISINFECTION SYSTEMS WILL VOID THE WARRANTY.

COPYRIGHT

© Portacel Disinfection Systems 2000

All rights reserved. No part of this publication may be reproduced, stored in a retrieval system, or transmitted in any form or by any means, electronic, mechanical, photocopying, recording or otherwise, without the prior permission of Portacel Disinfection Systems.

1. LEADING PARTICULARS

This is a list of the dimensions, weight, input and output requirements of the unit.

1.1 Dimensions

Height ..... 180 mm
Width ..... 150 mm
Depth ..... 120 mm

1.2 Weight

Complete Unit ..... 1 Kg

1.3 Connections and Operating Environment

Operating Range (°C) ..... 5 - 45 °C
Connections (nominal bore)..... uPVC
Vacuum .....122 mm of Mercury (65 water gauge) minimum

1.4 Delivery Capacities

100 L H Liquid Vacuum Regulator (440 US. gpd)
500L H Liquid Vacuum Regulator (2200 US. gpd)

2. PURPOSE

The function of the vacuum regulator is to permit liquids, at a positive pressure, to enter the dosing instrument under a partial vacuum. It will also shut off the chemical supply should the vacuum fail.

The vacuum regulator comprises a normally closed valve connected to a diaphragm operated by the ejector vacuum downstream of the regulator. A spring is fitted to keep the valve closed and also to provide a load against which the diaphragm acts.

3. PRINCIPLE OF OPERATION

The Trent Liquid Doser system has been designed to:

a) control and indicate the rate of flow of chemical solutions,
b) provide a simple means of setting the flow rate at any value within the range of the unit,
c) to mix the solution with water,
d) to deliver the resultant solution to the point of application.

With the dosing system correctly configured, the function of the ejector is to produce a vacuum that draws the solution from the control unit and also to mix this solution with the water flowing through the ejector. A double check valve prevents a back flow of water into the chlorinator. Proper operation of the ejector is dependent upon the inlet pressure being sufficiently higher than the discharge pressure.

Solution under pressure from the storage area flows to the vacuum regulator. This unit is remote mounted. At this point, the pressure is reduced to less than atmospheric because the valve will not open unless the ejector is creating a vacuum. This provides a controlled vacuum on the upstream side of the control valve. If for any reason, the vacuum regulator should pass solution when a vacuum is not being created, the diaphragm assembly, acting against the valve will shut down the dosing system.

The solution from the vacuum regulator passes through a meter-tube causing the float to indicate the rate of chemical flow on an easily read scale. The control valve stem controls the rate of flow of liquid.

In the event of a failure of the chemical supply, the ejector will create an over-vacuum situation, which draws the diaphragm assembly until the O ring on the carrier seals off the inlet.

Chapter 2

Technical Description

Contents

Para.		Page
	INTRODUCTION	**7**
1.	**PRINCIPAL COMPONENTS**	**7**
1.1	Valve	7
1.2	Valve Seat	7
1.3	Diaphragm Assembly	7
1.4	Return Spring	7
1.5	Inlet Port	7
1.6	Outlet Port	7
2.	**SYSTEM INTEGRATION**	**8**
2.1	Dosing Liquid Supply	8
2.2	Piping	8

ILLUSTRATIONS

Fig. No.		Page
2-1	100 L H Vacuum Regulator	9
2-2	500 L H Vacuum Regulator	10

INTRODUCTION

This Chapter gives a technical description of the principal components of the Liquid Vacuum Regulator and the operation of those components.

1. PRINCIPAL COMPONENTS

The Liquid Vacuum Regulator is supplied in both 100 L H (Fig. 2-1) or a 500 L H (Fig. 2-2) capacities. The Regulator typically comprises the following:

(a) Valve.
(b) Valve Seat.
(c) Diaphragm Assembly
(d) Return Spring
(e) Inlet Port
(f) Outlet Port

1.1 Valve

The valve provides both the control of the liquid flow through the regulator. It also provides a seal between the upstream flow and the unit itself when the unit is not operating.

1.2 Valve Seat

The valve seat works in conjunction with the valve to provide a seal between the upstream flow and the unit itself when the unit is not operating.

1.3 Diaphragm Assembly

The Diaphragm Assembly acts against the vacuum generated by the ejector to control the movement of the valve and therefore, control the flow of the liquid through the regulator.

1.4 Return Spring

The Return Spring enables the valve to return to its seated position when the unit is not operating.

1.5 Inlet Port

The Inlet Port provides a channel for the liquid to enter the regulator.

1.6 Outlet Port

The Outlet Port provides a channel for the liquid to exit the regulator.

2. SYSTEM INTEGRATION

To enable the Liquid Vacuum Regulator to operate correctly it must be integrated into a system with the following:

(a) Supply of dosing liquid.
(b) Vacuum piping between the regulator and the unit.
(c) Ejector unit.
(d) Vacuum piping between the unit and the Ejector.

2.1 Dosing Liquid Supply

The dosing liquid is supplied under pressure to the vacuum regulator. The supply, piping and control are installed by the customer and in accordance with current regulations.

2.3 Piping

Plastic pipe is used to supply the vacuum from the ejector to the vacuum regulator via the Trent Liquid Dosing Unit. The size of the piping will depend on the dosing rate required.

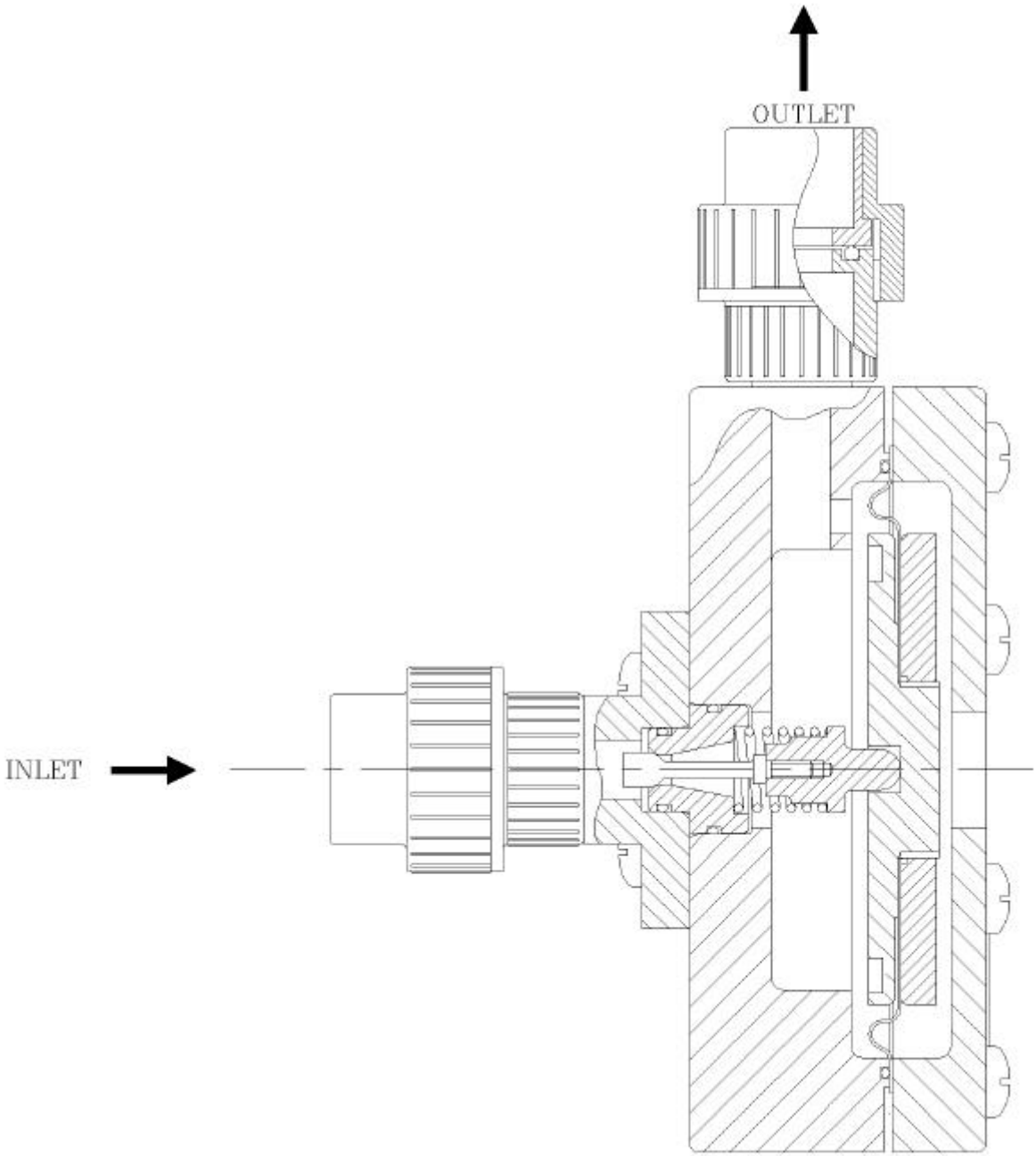

Figure 2-1 100L H Liquid Vacuum Regulator

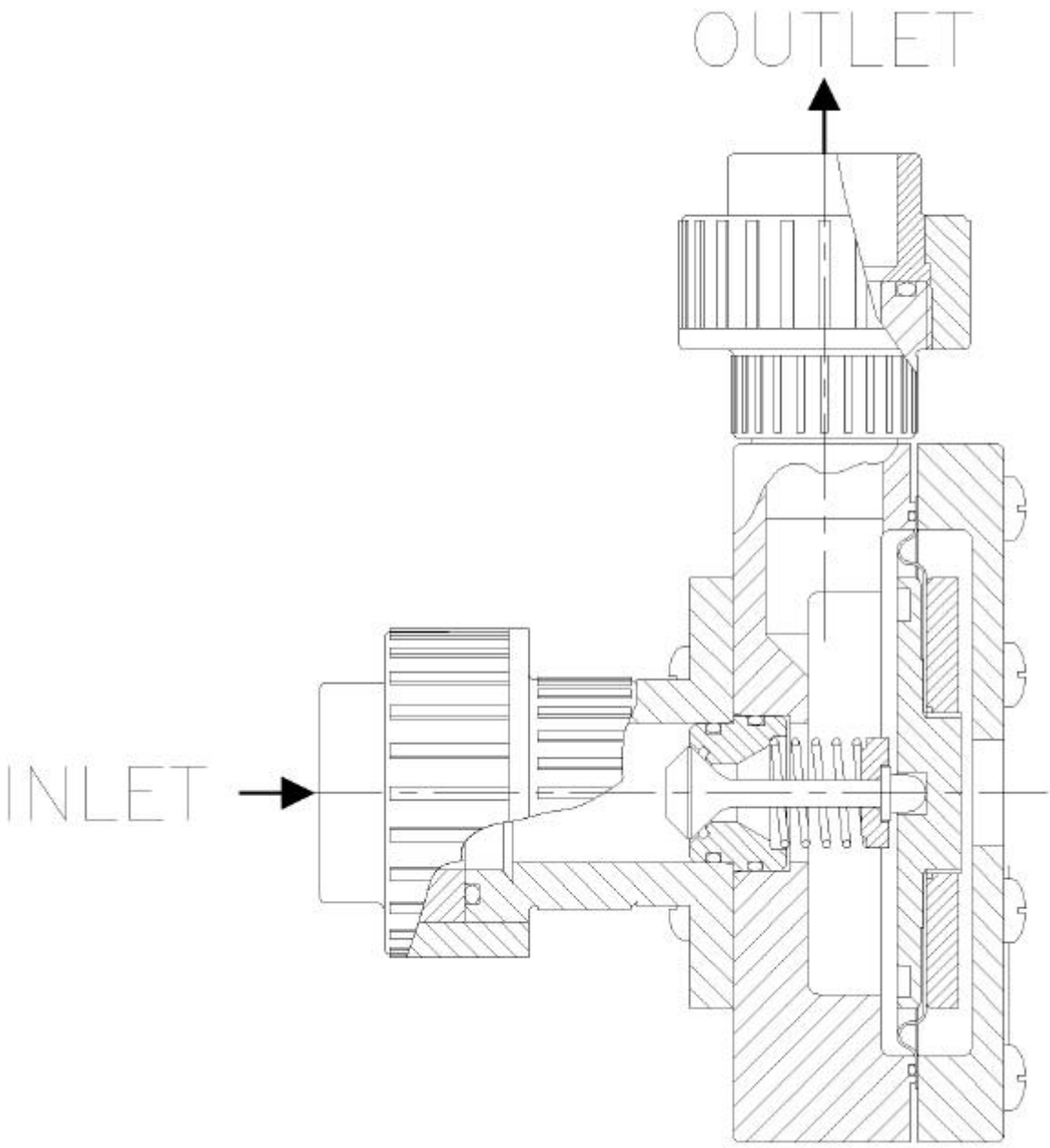

Figure 2-2 500L H Liquid Vacuum Regulator

Chapter 3

Installation

Contents

Para.		Page
1.	GENERAL	12
2.	INSTALLATION GUIDELINES	12

ILLUSTRATIONS

Fig. No.		Page
3-1	Simplified Installation of Vacuum Regulator	13

1. General

These installation and commissioning instructions are prepared assuming that the work will be carried out by an approved and experienced installation and commissioning engineer accustomed to working with this type of equipment and the plant in which the Liquid Vacuum Regulator will be operating.

Due to the corrosive nature of the liquids, sodium hypochlorite and sodium bisulphite, protective clothing including goggles and corrosive-resistant rubber gloves, must be worn.

2. Installation Guidelines

1. The Sodium Hypochorite or Sodium Bisulphite must be drawn off from the bottom of the chemical tank

2. The pipework between the chemical tank and the ejector should remain as horizontal as possible – avoid upwards and downwards kinks in the pipework

3. The length of the pipework between each unit should be kept to a minimum

4. The liquid vacuum regulator should be mounted directly below the liquid dosing unit

5. The layout shown in Fig 3.1 has been simplified and does not include pumps, make-up water, trace heating, isolation valves or ph reducing chemical dosing such as CO_2 (which is used to reduce calcification of ejectors, valve stems and pipework).

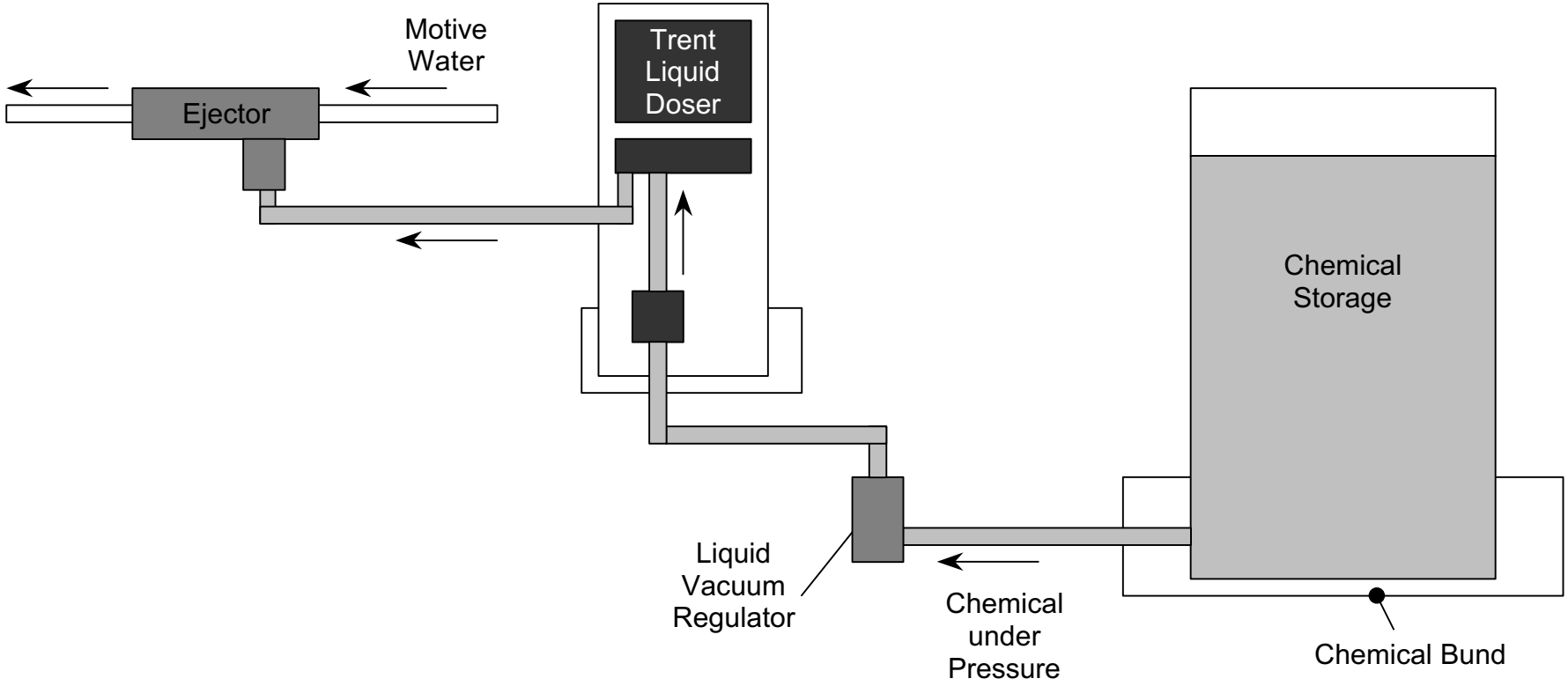

Figure 3-1 Simplified Installation of Vacuum Regulator

Chapter 4

Maintenance

Contents

Para.		Page
1.	**GENERAL**	**16**
2.	**SERVICE OF 100L/H & 500L/H LIQUID VACUUM REGULATOR(S)**	
2.1	Removal Procedure	16
2.2	Service	16
	2.2.1 100L H Vacuum Regulator	16
	2.2.2 500L H Vacuum Regulator	17
2.3	Replacement	18
4.	**SPARES FOR 100L/H & 500L/H VACUUM REGULATORS**	**19**

ILLUSTRATIONS

Fig. No.		Page
5-1	100L H NaOCL Liquid Vacuum Regulator	22
5-2	500L H NaOCL Liquid Vacuum Regulator	23

TABLES

Table No.		Page
5-1	Spares Kit 100L H Liquid Vacuum Regulator	19
5-2	Spares Kit 500L H Liquid Vacuum Regulator	19
5-3	100L H NaOCL Liquid Vacuum Regulator Part Numbers (Fig. 5-1)	20
5-4	500L H NaOCL Liquid Vacuum Regulator Part Numbers (Fig. 5-1)	21

1. GENERAL

These maintenance instructions are prepared assuming that the work will be carried out by an approved and experienced engineer accustomed to working with this type of equipment and the plant in which the Liquid Vacuum Regulator will be operating.

2. SERVICE OF 100L/H & 500L/H LIQUID VACUUM REGULATORS

2.1 Removal of 100L/H & 500L/H Liquid Vacuum Regulators

(Refer to Fig 5-1 and 5-2, part reference numbers in brackets)

a) Ensure liquid dosing unit is taken completely off line and manual isolating valves immediately either side of the liquid vacuum regulator to be serviced are closed. Note that gas alarms may sound when breaking open a sodium bisulphite liquid vacuum regulator.

b) Place a suitable receptacle under the vacuum regulator, to collect liquid that may drain off on breaking the joints.

c) To remove the vacuum regulator, break the inlet and outlet unions.

d) Place the vacuum regulator in a large plastic bowl.

2.2 Service

2.2.1 100L/H Liquid Vacuum Regulator

(Refer to Fig 5-1, part reference numbers in brackets)

Service kit AAS1503, one diaphragm alignment tool TE70 and two diaphragm plate ring spanners TE63 will be required. The O rings, inner and outer edges of the diaphragm and plastic threads, should be lubricated with chloroflurocarbon grease LD2.

a) Remove the four screws (1) securing the inlet adaptor (2).

b) Remove and renew the two O rings (19).

c) Remove the eight screws (16) and separate the body back (15) from the body front (4).

d) Carefully remove complete, then dismantle the parts (6), (7), (8), (9), (10) and (11), inspecting valves (6) & (11), valve seat (8)and spring (10) for damage.

e) Remove and renew the O rings (5),(7) and (9).

f) Unscrew the ring (14) from the diaphragm plate (12) using the two tools TE63.

g) Remove and renew the diaphragm (13), ensuring that it is replaced in the correct orientation.

h) Screw the ring (14) back on to the diaphragm plate (12) using the two tools TE63.

i) Refit the complete assembly (12), (13) & (14) in the correct orientation, between the body front (4) and body back (15).

j) Locate the diaphragm alignment tool TE70 into the inlet orifice of the body front (4) and screw up the eight screws (16), then remove the alignment tool.

k) Re-assemble the parts (6), (7), (8), (9), (10) and (11), carefully pulling together (8) and (11) to ensure that the thread on (11) is not stripped. Do not over-tighten.

l) Locate the completed assembly in k) above into the inlet orifice of the body front (4).

m) Refit the inlet adaptor (2) and screw up the four screws (1).

2.2.2 500L/H Liquid Vacuum Regulator

(Refer to Fig 5-2, part reference numbers in brackets)

Service kit 40691, one diaphragm alignment tool TE70 and two diaphragm plate ring spanners TE63 will be required. The O rings, inner and outer edges of the diaphragm and plastic threads, should be lubricated with chloroflurocarbon grease LD2.

a) Remove the four screws (2) securing the inlet adaptor (3).

b) Remove and renew the two O rings (1) & (19).

c) Remove the eight screws (16) and separate the body back (15) from the body front (4).

d) Carefully remove complete, then dismantle the parts (6), (7), (8), (9), (10), (11) and (20), inspecting valve (9), valve seat (8) and spring (10) for damage.

e) Remove and renew the O rings (5), (6), (7) and (20).

f) Unscrew the ring (14) from the diaphragm plate (12) using the two tools TE63.

g) Remove and renew the diaphragm (13), ensuring that it is replaced in the correct orientation.

h) Screw the ring (14) back on to the diaphragm plate (12) using the two tools TE63.

i) Refit the complete assembly (12), (13) & (14) in the correct orientation, between the body front (4) and body back (15).

j) Locate the diaphragm alignment tool TE70 into the inlet orifice of the body front (4) and screw up the eight screws (16), then remove the alignment tool.

k) Re-assemble the parts (6), (7), (8), (9), (10), (11) and (20), carefully pulling together (8) and (11) to ensure that the thread on (11) is not stripped. Do not over-tighten.

l) Locate the completed assembly in k) above into the inlet orifice of the body front (4).

m) Refit the inlet adaptor (3) and screw up the four screws (2).

3.3 Replacement of 100L/H & 500L/H Liquid Vacuum Regulators

(see Fig 5-1 and 5-2, part reference numbers in brackets)

a) Refit the liquid vacuum regulator into position, doing up the inlet and outlet unions.

b) Open any manual isolation valves, closed prior to removal of the unit.

c) Remove any other isolations put on the dosing unit prior to servicing.

d) Select the dosing unit as duty, to check the operation of the newly serviced liquid vacuum regulator.

4. Spares for 100L/H & 500L/H Liquid Vacuum Regulators

The following tables provide the part numbers of the individual components of both the 100L H and 500L H Vacuum Regulators

Table 5-1 Spares Kit 100L/H Liquid Vacuum Regulator

Fig/Item No.		Description	Part No.	Quantity
5-1	14	Diaphragm	DB32	1
5-1	1&20	O Ring	OB6	2
5-1	5	O Ring	OB44	1
5-1	12	O Ring	OB92	1
5-1	8	O Ring	OB124	1

Table 5-2 Spares Kit 500L/H Liquid Vacuum Regulator

Fig/Item No.		Description	Part No.	Quantity
5-2	14	Diaphragm	DB32	1
5-2	20	O Ring	OB12	1
5-2	1	O Ring	OB13	1
5-2	12	O Ring	OB92	1
5-2	5	O Ring	OB128	1
5-2	6	O Ring	OB135	1
5-2	8	O Ring	OB52	1

Table 5-3 100L/H Liquid Vacuum Regulator Parts

Fig/Item No.		Description	Part No.	Quantity
5-1	4	Valve	41114	1
5-1	11	Body Front	AAS1499	1
5-1	3	Adaptor Inlet	AAS1500	1
5-1	16	Body Back	BH230	1
5-1	14	Diaphragm	DB32	1
5-1	1&20	O Ring	OB6	2
5-1	8	O Ring	OB124	1
5-1	5	O Ring	OB44	1
5-1	12	O Ring	OB92	1
5-1	13	Diaphragm Plate	PF99	1
-----	---	Label Serial No.	PH186	1
5-1	18	Label Inlet	PH93	1
5-1	19	Label Outlet	PH94	1
5-1	15	Diaphragm Ring	RB38	1
5-1	7	Valve Seat	SD120	1
5-1	9	Compression Spring	SL71	1
5-1	17	Screw	SM117	8
5-1	2	Screw	SM144	4
5-1	10	Pressure Relief Valve	VA52	1

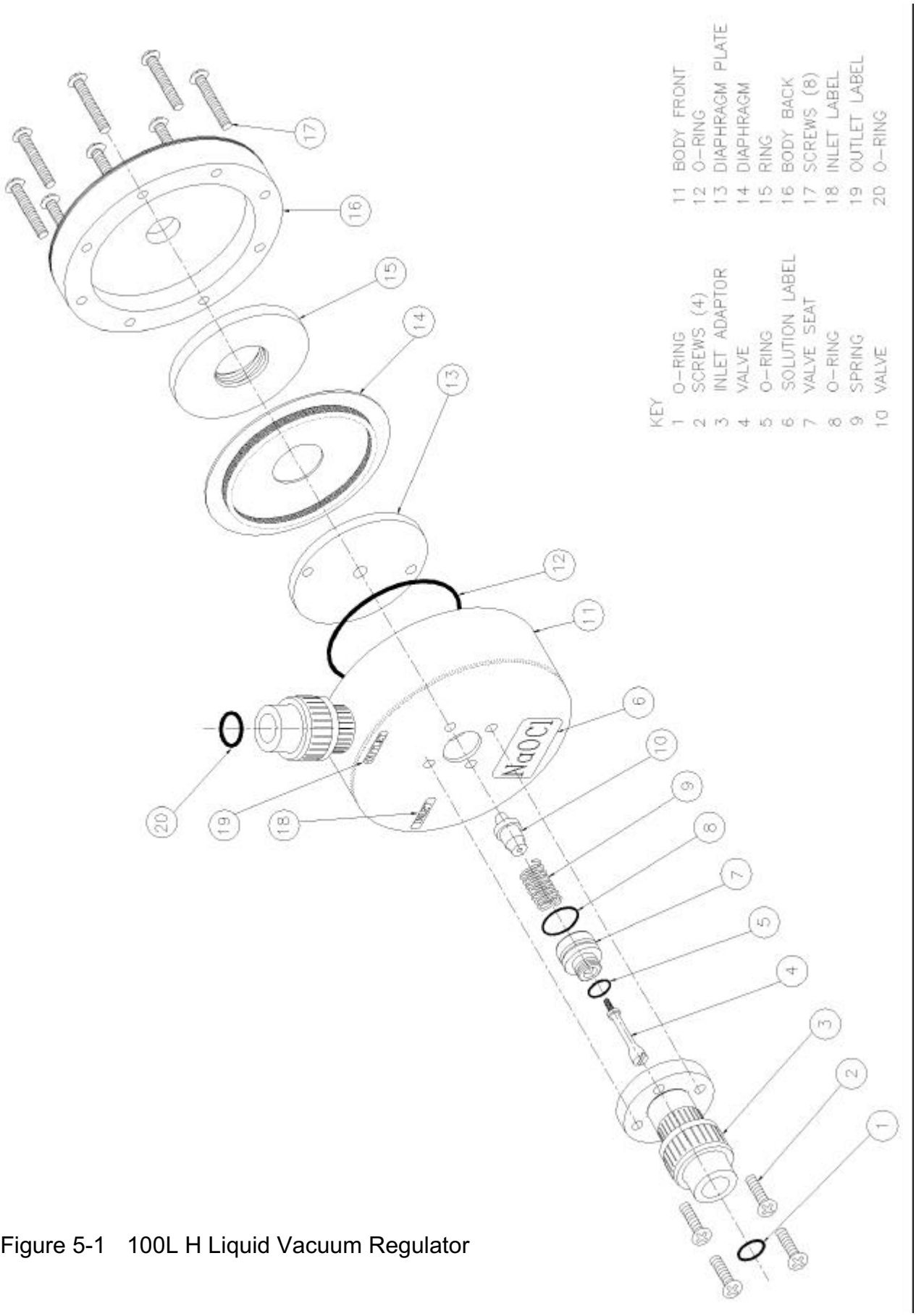

Figure 5-1 100L H Liquid Vacuum Regulator

Table 5-4 500L/H Liquid Vacuum Regulator Parts

Fig/Item No.		Description	Part No.	Quantity
5-2	11	Body Front	40681	1
5-2	3	Adaptor Inlet	40683	1
5-2	7	Valve Seat	40685	1
5-2	4	Valve	40686	1
5-2	10	Retainer	40687	1
5-2	16	Body Back	BH230	1
5-2	14	Diaphragm	DB32	1
5-2	20	O Ring	OB12	1
5-2	1	O Ring	OB13	1
5-2	5	O Ring	OB128	1
5-2	6	O Ring	OB135	1
5-2	8	O Ring	OB52	1
5-2	12	O Ring	OB92	1
5-2	13	Diaphragm Plate	PF99	1
-----	---	Label Serial No.	PH186	1
5-2	18	Label Inlet	PH93	1
5-2	19	Label Outlet	PH94	1
5-2	15	Diaphragm Ring	RB38	1
5-2	9	Compression Spring	SL83	1
5-2	17	Screw	SM117	8
5-2	2	Screw	SM144	4

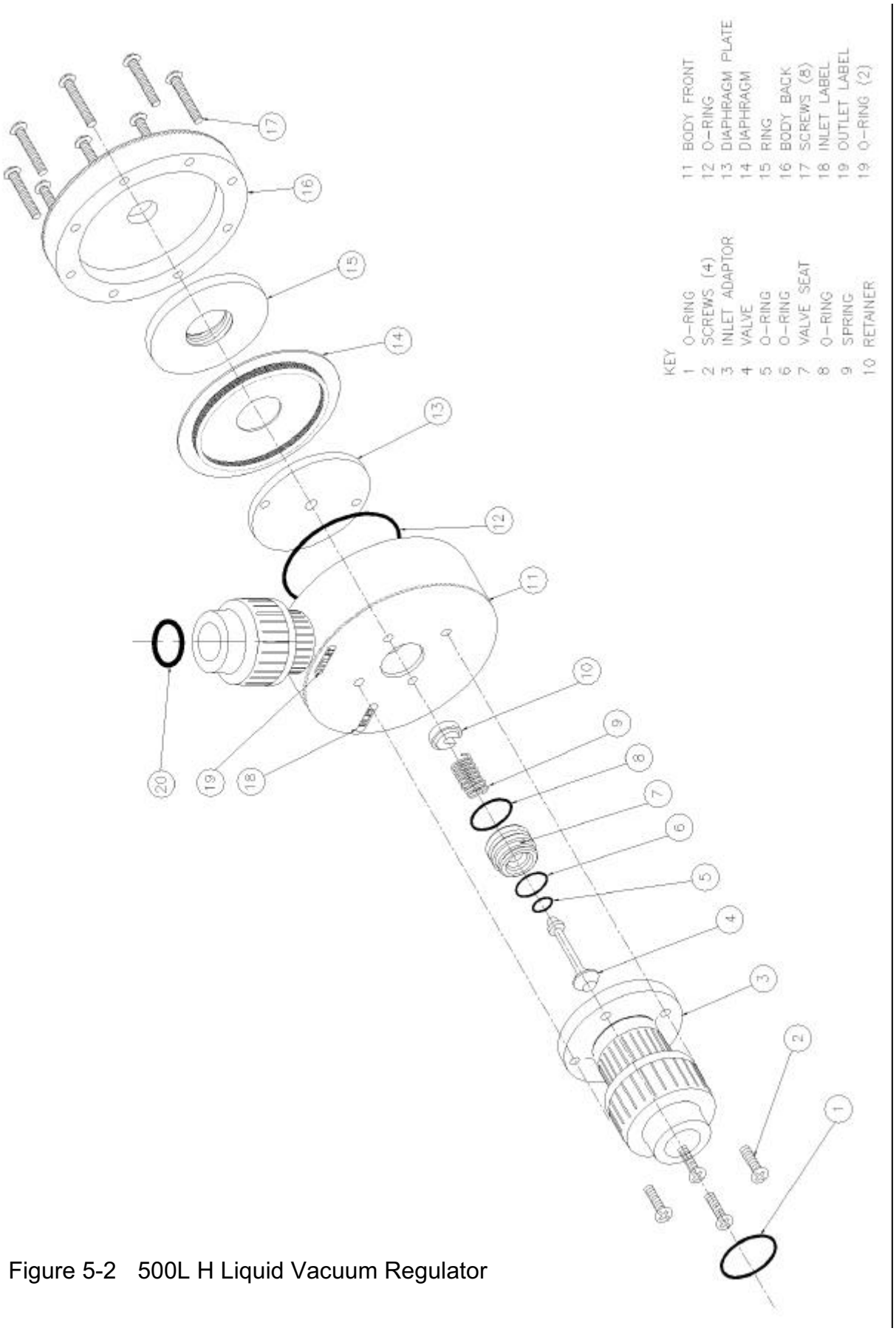

Figure 5-2 500L H Liquid Vacuum Regulator

MEDWAY 2 ANALYSER

OPERATING AND MAINTENANCE MANUAL

Part No 40240

Issue 1
July 1998

Portacel
Winnall Valley Road,
Winchester,
Hampshire, SO23 0LL,
United Kingdom.
A part of T. M. Products.

Telephone: 44 (0) 1962 705200
Fax: 44 (0) 1962 705279

CONTENTS

Amendment Record

Introduction

Safety

Chapter 1: General Description

Introduction
1. Leading Particulars
2. Purpose
3. Principle of Operation
4. System Overview

Chapter 2: Technical Description

Introduction
1. General
2. Principal Components
3. Chlorine Residual Cell with Carbon Column
4. Chlorine Residual Cell with Polarising ero
5. System Integration

Chapter 3: Installation and Commissioning

Introduction
1. General
2. Installing the Unit(s)
3. Commissioning and Calibration

Chapter 4: Operating Instructions

Introduction
1. General
2. Menu Overview
3. Start Up
4. Monitor
5. Shutdown

Chapter 5: Maintenance

Introduction
1. General
2. Removal and Replacement Procedures
3. Fault Finding
4. Spare Parts

Chapter 6: Options (As Applicable)

Option A – Buffer System
Option B – Flowmeter and Low Flow Switch

AMENDMENT RECORD

Amendment No	Date	Signature

INTRODUCTION

This manual contains the information on the Medway 2 Analyser, its Operation and Maintenance. The Operation Chapter is amended to reflect the delivered options. All customer options are added in Chapter 6 and each option will detail its own Maintenance.

COPYRIGHT

© Portacel Disinfection Systems 1999

All rights reserved. No part of this publication may be reproduced, stored in a retrieval system, or transmitted in any form or by any means, electronic, mechanical, photocopying, recording or otherwise, without the prior permission of Portacel Disinfection Systems.

SAFETY OF PERSONNEL

WORKING ENVIRONMENT

Purpose

If used correctly the Medway 2 Analyser will only come into contact with Chlorine in quantities that are put into drinking water, this operation with Chlorine does not constitute a hazard to health. PORTACEL decline responsibility if an attempt is made to use the equipment for any purpose other than for which it was designed.

Environment

The Portacel Medway 2 Analyser is installed as part of a water treatment system. The equipment must be operated in accordance with site instructions including:

(a) Temperature range.
(b) Humidity.
(c) Electrostatic discharge.

Personnel

	WARNING! **If incorrectly used this equipment can cause severe injury. Those who use and maintain the equipment should be trained in its proper use, and should have read and understood the Safety Instructions contained in this manual before attempting to set up, operate, adjust or service the equipment.**

SAFETY ALERTS

SYMBOLS AND DECALS

Personnel must be familiar with all the warning symbols and decals fitted to the equipment. Failure to recognise a warning and read the associated safety instructions may result in injury or death.

The following symbols and decals are used on the equipment:

This decal is used to indicate an electrical hazard. The equipment must be disconnected from main electrical power supply when this decal is encountered during installation, maintenance or setting-up.

REPLACE DAMAGED DECALS IMMEDIATELY

WARNINGS, CAUTIONS AND NOTES

Throughout this manual attention is drawn to specific points as follows:

WARNING!

A warning alerts the reader to the potential hazards. Failure to read and obey the safety instructions may result in serious injury to, or death of, personnel and damage to equipment.

CAUTION!

A caution alerts the reader to recommendations or instructions, non-observance of which could cause damage to equipment.

NOTE:

A note provides additional information that should be given special attention.

OPERATIONAL SAFETY

Operation

Do not start the equipment if the unit is not fully assembled.

Specific warnings are included throughout this manual in the relevant procedures. As a general warning the following areas of the equipment present a particular danger during setting-up and operation:

(a) Areas in direct contact with dosing gas.

ELECTRICAL HAZARD

WARNING!

The equipment must be disconnected form the main electrical power supply during installation or maintenance.

The equipment operates from a 100 to 240V AC main electrical supply or 24V DC. Specific warnings are included throughout this manual in the relevant procedures. As a general warning the following precautions must always be applied.

Only qualified personnel should carry out work on the equipment and the external alarm circuits.

ELECTRO-STATIC DISCHARGE (ESD) PRECAUTIONS

Precautions against ESD must be taken to prevent damage to the devices fitted to electronic circuits. When handling of the electronic circuits is required observe the following:

(a) Do not touch electronic circuits whilst unpacking.
(b) Always use a grounded wrist strap whilst handling electronic circuits.
(c) Ensure that the equipment is grounded when using the wrist strap.

Chapter 1

General Description

Contents

Para		Page
	INTRODUCTION	**1.3**
1.	**LEADING PARTICULARS**	**1.5**
1.1	Dimensions	1.5
1.2	Weight	1.5
1.3	Connections and Operating Environment	1.5
1.4	Accuracy	1.5
1.5	Displays and Indicators	1.6
1.5.1	Residual Monitor	1.6
2.	**PURPOSE**	**1.7**
3.	**PRINCIPLE OF OPERATION**	**1.7**
4.	**SYSTEM OVERVIEW**	**1.10**
4.1	General	1.10
4.2	Safety	1.10
4.3	Polarising ero Analyser	1.10
4.4	Carbon Column Analyser	1.12
4.5	Residual Monitor	1.12

ILLUSTRATIONS

Fig. No.		Page
1.1	Medway 2 Analyser - Carbon Column Type	1.8
1.2	Medway 2 Analyser - Polarising ero Type	1.9
1.3	Medway 2 Monitoring System - Schematic Diagram	1.1

INTRODUCTION

This Chapter gives the main particulars of the Medway 2 Residual Chlorine Monitoring System and includes the purpose and principle of operation of the system together with an overview of a typical installation in which it may be fitted and operated.

1. LEADING PARTICULARS

This is a list of the dimensions, weight, input and output requirements of the unit.

1.1 Dimensions

Monitor:
- Height.....230mm.
- Width.....227mm.
- Depth.....115mm.

Analyser with Carbon Column (Dechlorinating Cell):
- Height.....350mm.
- Width.....168mm.
- Depth.....120mm.

Analyser without Carbon Column (Polarising Cell):
- Height.....145mm.
- Width.....168mm.
- Depth.....70mm.

1.2 Weight

Monitor.....2kg.
Analyser (with polarising cell).....1.2kg.
Analyser (with dechlorinating cell).....2.9kg.

1.3 Connections and Operating Environment

Sample Temperature Range (°C).....0 - 35.
Signal.....4-20 or 0-10mA.
Power Supply..... 110 230V 50 60Hz or 24VDC.
Sample (Clean) Water.....0.2litres min 1.0 to 5.0bar.
Sample Water Connection..... ”BSP with 0.5mm particle screen.
Drain Connection.....8mm.
RS232 Two-way Communications
Mains Socket

1.4 Accuracy

Monitor Resolution.....0.01mg l.
Cell Accuracy..... 1 at Full Scale Deflection.

1.5 Displays and Indicators

1.5.1 Residual Monitor

The Medway 2 Residual Monitor is the central part of the monitoring system. It incorporates six function keys, alarm lights and a four digit LCD display through which the system can be:

(a) Set up.
(b) Information monitored, collated and displayed.
(c) Alarms initiated, displayed and relayed.

An LED is also fitted which gives system condition indication by means of varying illumination. Further details are described later.

2. PURPOSE

The Medway 2 Analyser is designed to provide continuous monitoring of the residual chlorine level in a flow of water and, by use of the retransmission signal available from the monitor, it can also be part of an automatic dosing control system.

The analyser system is modular by design, allowing various optional items to be fitted when necessary, to give greater flexibility of monitoring and control.

3. PRINCIPLE OF OPERATION (Figs. 1.1 and 1.2)

The Medway 2 Analyser system comprises two main components, a residual chlorine measurement cell and a monitor (transmitter indicator).

A sample flow of treated water passes through the measurement cell which is temperature compensated and contains two electrodes of dissimilar metals. The galvanic response generates an electrical current that is directly proportional to the residual chlorine concentration in the water.

The current created in the cell is converted into a signal which is amplified and then transmitted as a proportional 4 - 20 or 0 - 10mA signal. The signal is used to give a readout on the monitor of the residual chlorine level and, by adding reagents, the total available chlorine. The signal can also be transmitted to an external dosing control system to give economical usage of chlorine.

The monitor is software driven and is the means by which system parameters may be entered and set. Various other site parameters can be programmed into the monitor against which the signal from the analyser may be compared. For instance, the input and output ranges, the span and others can be programmed in for the purposes of initiating system alarms. All can be set and interrogated through the digital readout display. Any alarm states arising during operation will also be shown on the display. Function buttons provide for function test, viewing of menus, selection of data, the increasing and decreasing of data values and alarm acceptance. An LED gives indication of operating condition status. This is achieved by varying the illumination sequence according to the relative condition.

For maximum accuracy of analysis the system has to be zero calibrated. This involves creating a chlorine free sample at the electrodes and hence a zero signal datum. The chlorine free sample is created by one of two methods depending on the type of measurement cell fitted. The two types of cell are a polarising zero and a carbon column.

With the polarising zero type of cell, water flow around the electrodes is temporarily halted allowing the chlorine content of the water sample to decay to zero naturally. In the carbon column type, the sample water is diverted through the activated carbon in the carbon column which acts to remove the chlorine from the sample water.

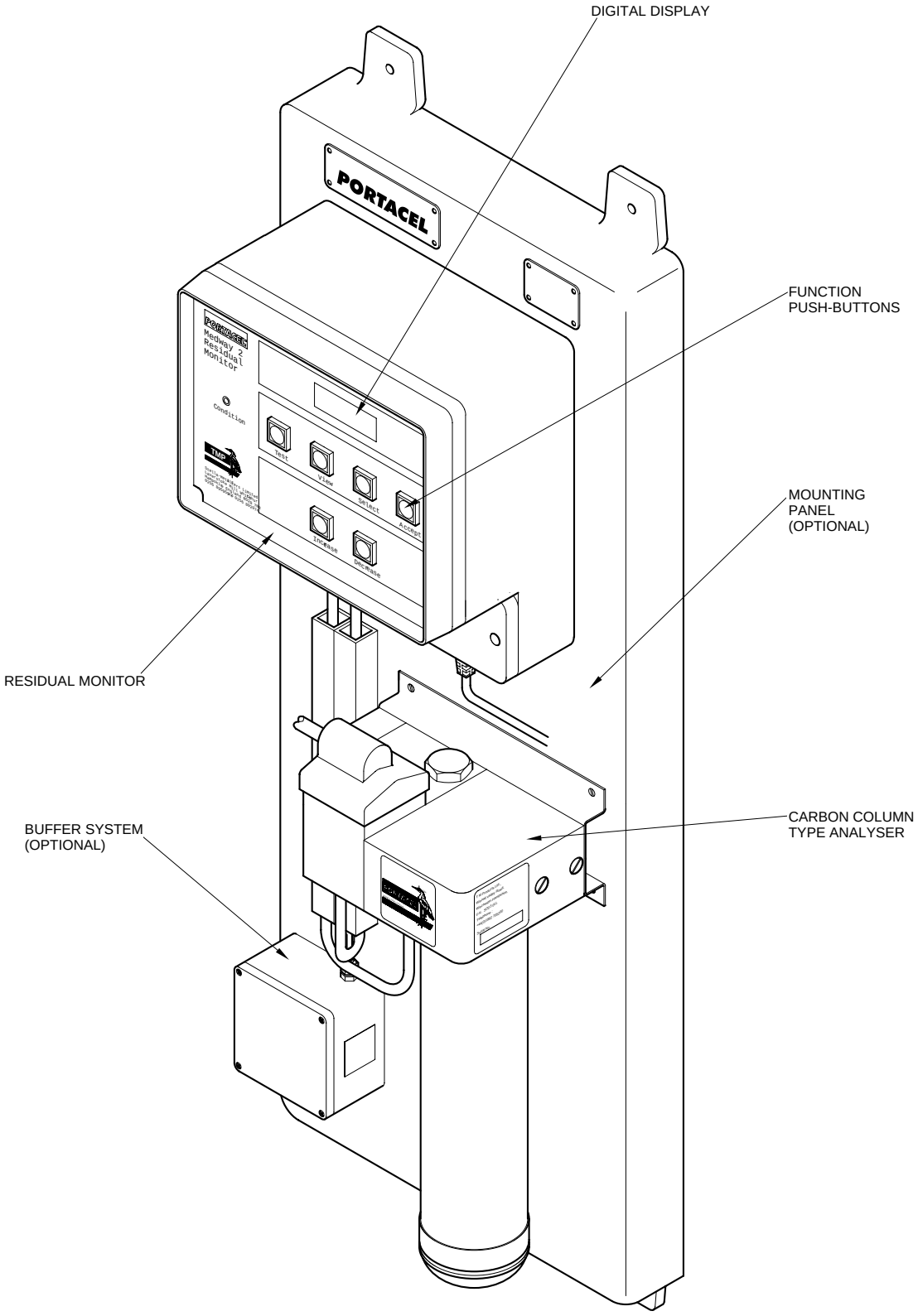

Fig. 1.1 Medway 2 Analyser - Carbon Column Type

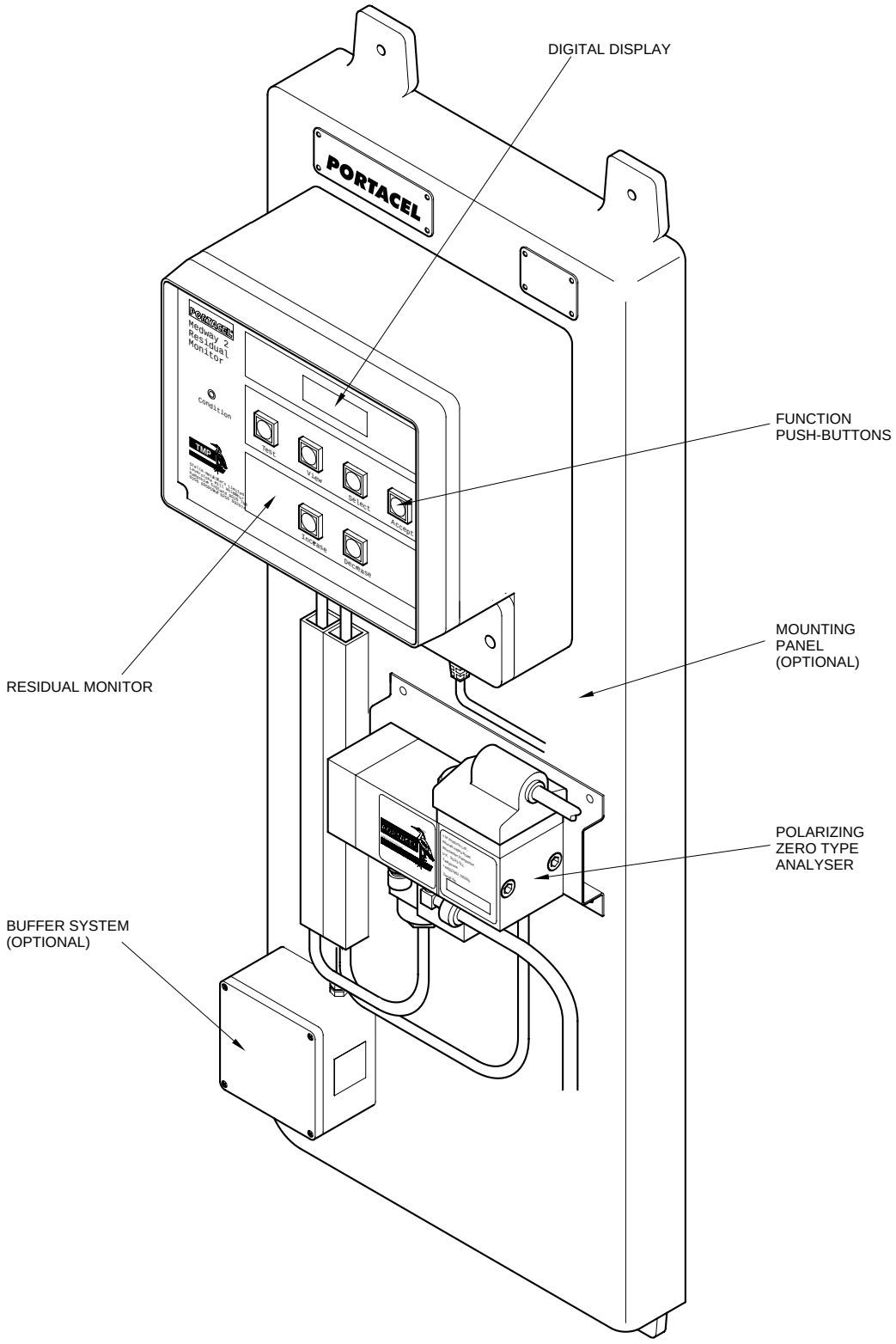

Fig. 1.2 Medway 2 Analyser - Polarising Zero Type

4. SYSTEM OVERVIEW (Fig. 1.3)

A schematic diagram showing the basic monitoring system is shown in Figure 1.3. In reality a system may include other items of optional equipment which have been omitted for clarity. Optional equipment descriptions, and their relationship to the basic system, are included in Chapter 6 Options of this Manual when supplied as part of the installation.

4.1 General

The diagram shows the flow of water from the mains to the analyser cell, from where it goes to drain, and the signal routing to and from the monitor for input and alarm parameters, error messages and residual value display.

4.2 Safety

As the chlorine levels passing through the Medway 2 are equivalent to those normally applied to drinking water there are no abnormal safety hazards associated with this equipment. Even those quantities passing through the analyser which may be sufficient to raise a system alarm will not be hazardous to health.

Electrical hazards do exist however with this equipment and the safety precautions listed in the front of this manual must be observed when carrying out any maintenance.

4.3 Polarising Zero Analyser

NOTE:
This is an alternative to the Carbon Column Analyser, only one or the other is fitted.

A sample flow of water is tapped off the mains supply and fed to the analyser. At the analyser, during normal operation, the water passes through a flow controller and then the electrode cell where it is temperature compensated and analysed before going to drain.

During zero calibration, the main flow of sample water is diverted directly to drain, bypassing the electrode cell. A shut-off valve also closes in the normal discharge to drain line, trapping a now static sample of water in the electrode cell. The chlorine level of this sample is allowed to naturally decay to zero for the monitor to register as a datum. On completion of calibration, the valves re-open allowing normal water flow to resume.

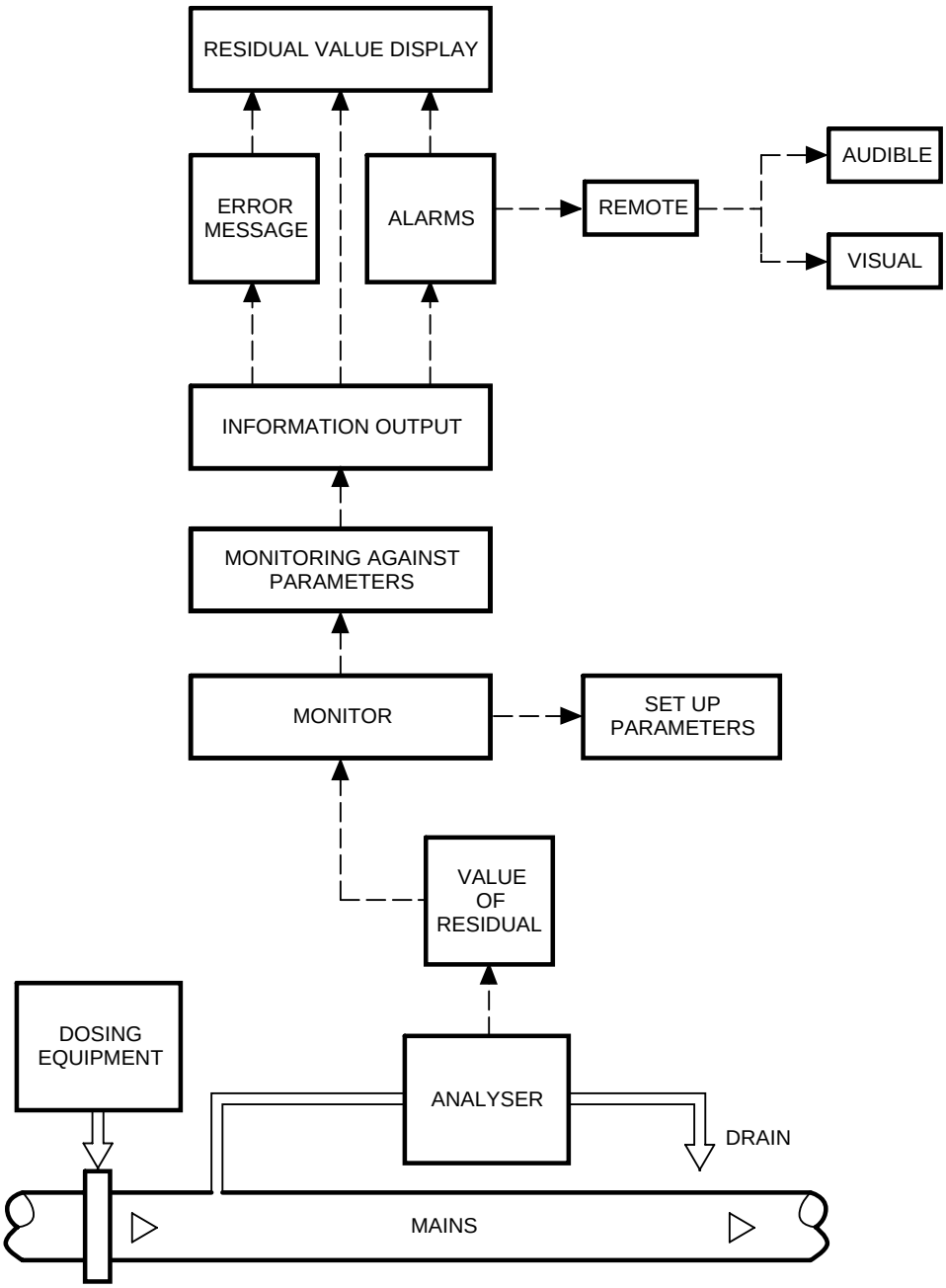

Fig. 1.3 Medway 2 Monitoring System - Schematic Diagram

4.4 Carbon Column Analyser

NOTE:
This is an alternative to the Polarising ero Analyser, only one or the other is fitted.

A sample flow of water is tapped off the mains supply and fed to the analyser. At the analyser, during normal operation, the water passes through a flow controller and then the electrode cell where it is temperature compensated and analysed before passing to drain.

During zero calibration the flow is diverted through the carbon column before entering the electrode cell and then to drain. The activated carbon in the column removes the chlorine from the sample resulting in cessation of electrical action in the electrode cell and a zero signal being monitored as a datum. On completion of calibration, the diverter valve re-opens allowing normal water flow and monitoring to resume.

4.5 Residual Monitor

The signal produced at the analyser is directly proportional to the level of residual chlorine in the sampled water. This signal is fed to the monitor where it can be read on the digital display as a chlorine level in mg l of water. Other information including alarms, error messages and control parameters can also be selected via function keys on the front of the monitor, depending on the extent of control programmed into the software.

The software programming within the monitor will depend on the extent of control specified by the customer. Various adaptations are possible utilising the signals available for output and any external signals input. An RS232 connection is available for interface purposes.

Chapter 2

Technical Description

Contents

Para		Page
	INTRODUCTION	**2.3**
1.	**GENERAL**	**2.5**
2.	**PRINCIPAL COMPONENTS**	**2.7**
2.1	Residual Monitor	2.7
2.2	Analyser Cells	2.11
2.2.1	Carbon Column Analyser	2.11
2.2.2	Polarising ero Analyser	2.15
3.	**SYSTEM INTEGRATION**	**2.19**
3.1	Sample Water Supply	2.19
3.2	Electrical Connection	2.19
3.3	Software Interface	2.19

ILLUSTRATIONS

Fig No		Page
2.1	Medway 2 Analyser - Carbon Column Type	2.6
2.2	Residual Monitor	2.9
2.3	Carbon Column Analyser	2.13
2.4	Polarising ero Analyser	2.17

INTRODUCTION

This Chapter gives a technical description of the principal components of the Medway 2 Analyser and the operation of those components. Optional items of equipment are similarly described in Chapter 6 Options of this Manual when fitted.

1. GENERAL

The Medway 2 Analyser (Fig 2.1) is supplied as either a wall or panel mounted unit comprising the residual monitor, the measurement cell unit either a polarising zero type or carbon column type and any optional equipment that may have been specified.

The options available are a sample water flowmeter, incorporating a low flow switch, and a buffer system. If either of these items have been specified and supplied, full descriptions will be given in Chapter 6 Options of this Manual.

The water sampling point for the system is usually downstream of any dosing equipment. This provides the ability, if required, for control by the Medway 2 Analyser of any dosing system fitted upstream.

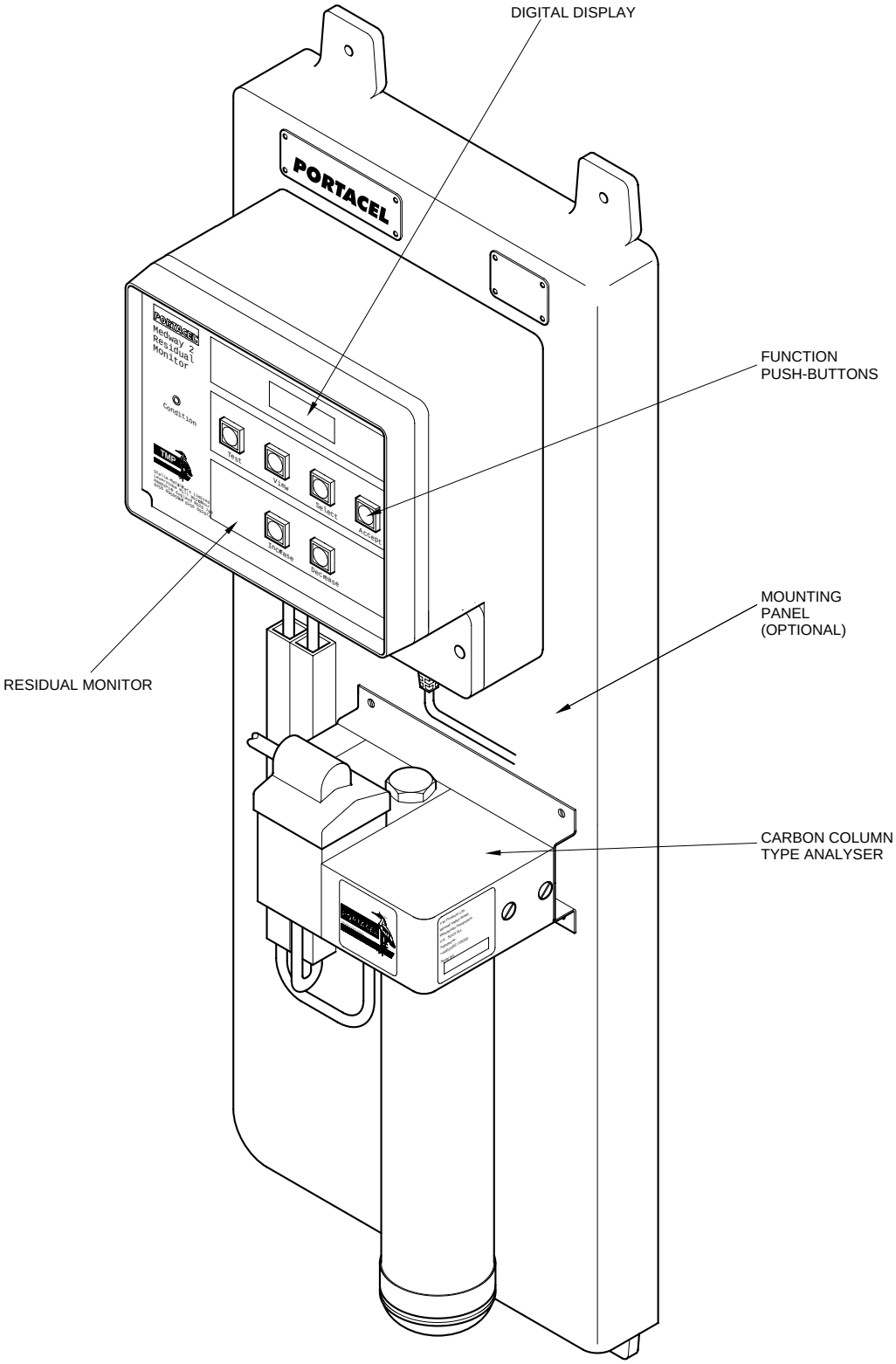

Fig. 2.1 Medway 2 Analyser - Carbon Column Type

2. PRINCIPAL COMPONENTS

2.1 Residual Monitor

The Residual Monitor (Fig 2.2) is the central part of the Medway 2 system. Through it the system can be: set up information monitored, collated and displayed and alarms initiated and relayed.

The monitor comprises a rectangular enclosure having two sections. The lower section contains the electrical connection terminals and the upper section, the front control panel and its associated electronic system.

The front control panel carries a green system CONDITION LED, a four digit, seven-segment readout display and six push-button function keys.

The LED has four states of condition indication:

(a) Off - the LED is not illuminated and the system is switched off.
(b) Steady Flashing - indicates the system is operating normally.
(c) uicker Flashing - indicates a monitor fault.
(d) Continuous - the LED is on continuously indicating a hardware fault.

The alphanumeric digital display can be set to give a readout of the following:

(a) The current chlorine residual value.
(b) Alarm indications and error messages.
(c) The value of parameters to which the system has been preset.
(d) System parameters as they are in process of being set.
(e) The programme menu heading initials.

The six function keys provide the following actions and are labelled accordingly:

(a) TEST - for use in the course commissioning of the 4-20mA output signal.
(b) VIEW - enables inspection of the parameters under which the system is currently operating.
(c) SELECT - used to select a path through the monitor s menu.
(d) ACCEPT - is used to accept a parameter value during set up or calibration and to make a step forward through the menu.
(e) INCREASE - increases the parameter value during set up or calibration.
(f) DECREASE - decreases the parameter value during set up or calibration.

The lower section of the panel houses an RS232 interface socket, terminal blocks for the connection of the analyser cell, relayed alarm outputs and any optional equipment, and a mains power socket. The monitor is protected by a mains filter and fuse, also housed in this section.

The system can operate on, and has facilities to receive, 240V AC, 110V AC or 24V DC.

The analyser cell connections comprise solenoid operated valve outputs and monitoring signal inputs. A terminal label is affixed inside the lower section cover.

The RS232 socket facilitates connection of a computer for diagnosis and setting up of the system.

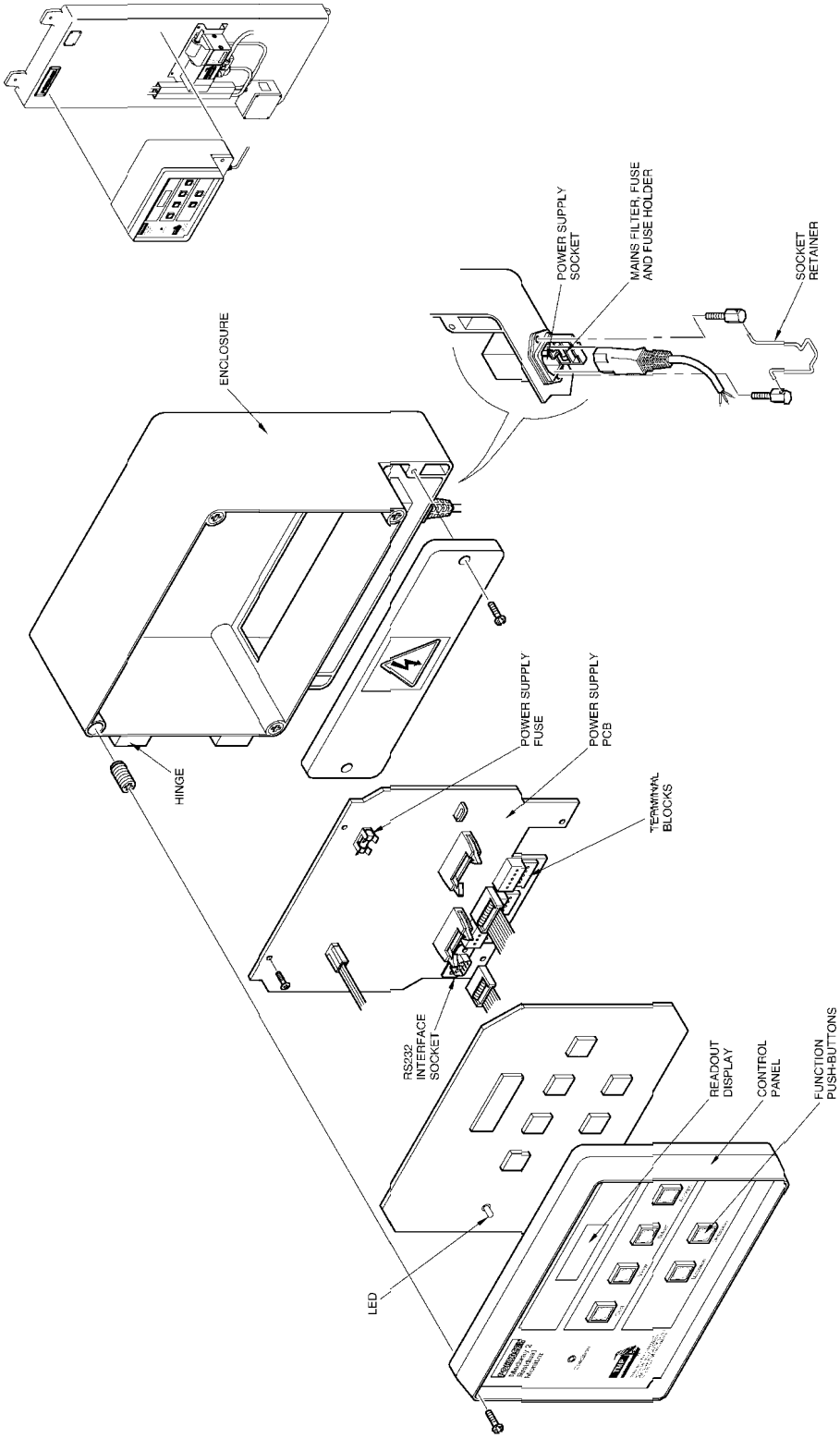
ENCLOSURE
HINGE
POWER SUPPLY SOCKET
MAINS FILTER, FUSE AND FUSE HOLDER
SOCKET RETAINER
POWER SUPPLY FUSE
POWER SUPPLY PCB
TERMINAL BLOCKS
RS232 INTERFACE SOCKET
READOUT DISPLAY
CONTROL PANEL
FUNCTION PUSH-BUTTONS
LED

2.2 ANALYSER CELLS

Two types of analyser cell are available, a carbon column analyser and a polarising zero analyser. Only one or the other type will be fitted to a Medway 2 monitoring system. The carbon column type analyser is normally the more suited to a water treatment plant.

2.2.1 Carbon Column Analyser

The Carbon Column Analyser (Fig 2.3) comprises four principal parts, namely: the electrode cell the carbon column a flow controller and a solenoid operated diverter valve. The unit has two water connections, one the inlet and the other an outlet to drain.

The electrode cell is of monoblock construction and is where the actual measuring of the chlorine takes place. It accommodates a circular chamber in which there are two electrodes and approximately 350 small glass beads. The beads act to keep the electrodes clean during normal operation. A removable cover is fitted over the top of the cell and water outlet which when removed allows movement of the glass beads and hence water flow to be observed during operation. The electrodes themselves are bonded into the block in addition to a thermistor provided for sample water temperature compensation. A five core cable carries signal outputs from the electrodes and the thermistor.

The flow controller is fitted to provide a measured flow of 0.2 l min sample water through the electrode cell for analysis. It consists of a spring-loaded diaphragm plate with an orifice, and a valve seat. A 0.5mm mesh filter screen is located in the water inlet port, ahead of the diaphragm plate.

From the flow controller the water passes into the diverter valve which is solenoid operated and houses a valve screw assembly. When the solenoid coil is energised, the screw assembly lifts and diverts the water flow through the carbon column instead of directly to the electrode cell. Diversion takes place during the zero calibration procedure. The solenoid coil has a two core cable.

The carbon column consists of a metal cylinder and a housing into which the column is screwed. The cylinder contains a column of activated carbon, also screwed into the housing, which dechlorinates the sample water passing through it. The housing is of monoblock construction with integral water ports.

The main component housings are secured together and mounted on a bracket for wall or panel mounting.

Fig. 2-3 Carbon Column Analyser

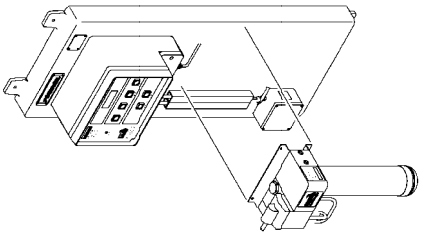

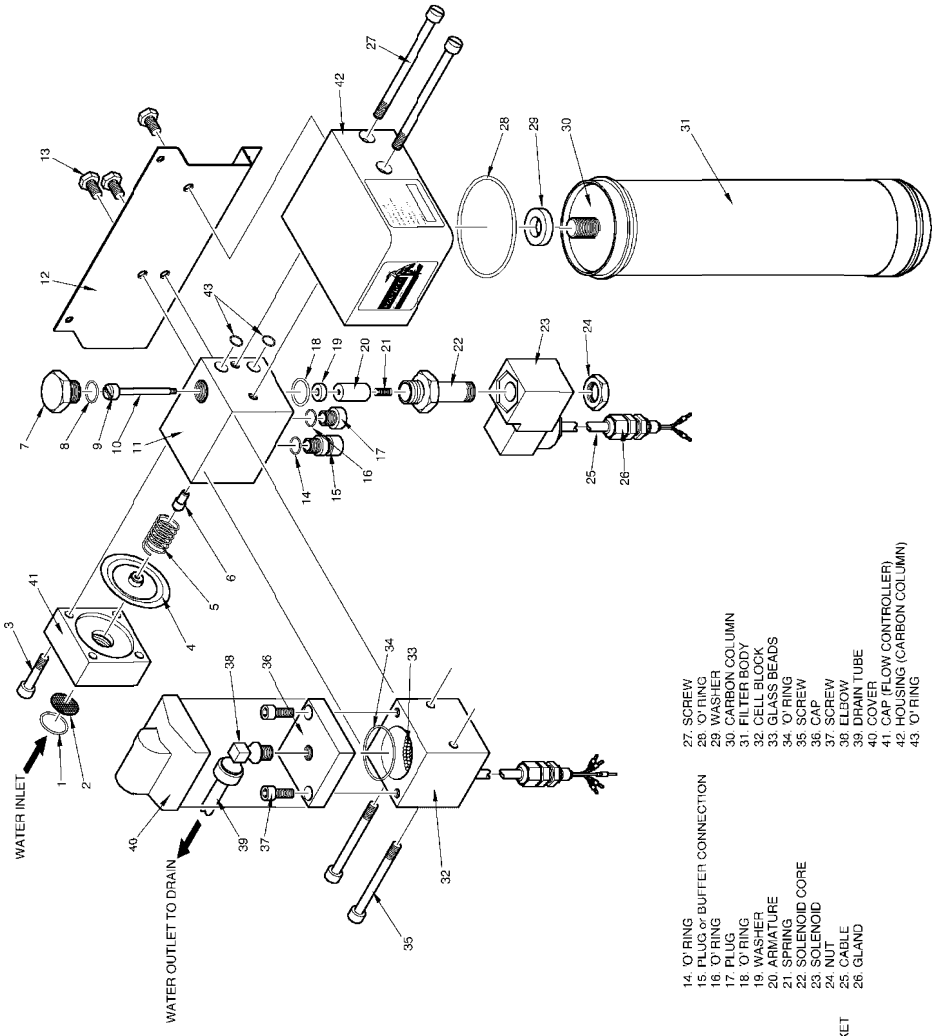

2.2.2 Polarising Zero Analyser

The Polarising ero Analyser (Fig 2.4) comprises three principal parts, namely: the electrode cell a flow controller and a solenoid operated diverter valve. The unit has three water connections, water inlet, outlet to drain when monitoring and an outlet to drain when zeroing.

The electrode cell is of monoblock construction and is where the actual measuring of the chlorine takes place. It accommodates a circular chamber in which there are two electrodes and approximately 350 small glass beads. The beads act to keep the electrodes clean during normal operation. A removable cover is fitted over the top of the cell and water outlet which when removed allows movement of the glass beads and hence water flow to be observed during operation. The electrodes themselves are bonded into the block in addition to a thermistor provided for sample water temperature compensation. A five core cable carries signal outputs from the electrodes and the thermistor.

The flow controller is fitted to provide a measured flow of 0.2 l min sample water through the electrode cell for analysis. It consists of a spring-loaded diaphragm plate with an orifice, and a valve seat. A 5.0mm mesh filter screen is located in the water inlet port, ahead of the diaphragm plate.

From the flow controller the water passes into the diverter valve which is solenoid operated and houses a valve screw assembly. When the solenoid coil is energised, the screw assembly lifts and diverts the water flow directly to drain instead of through the electrode cell. Diversion takes place during the zero calibration procedure. The solenoid coil has a two core cable.

Fig. 2.4 Polarising Zero Analyser

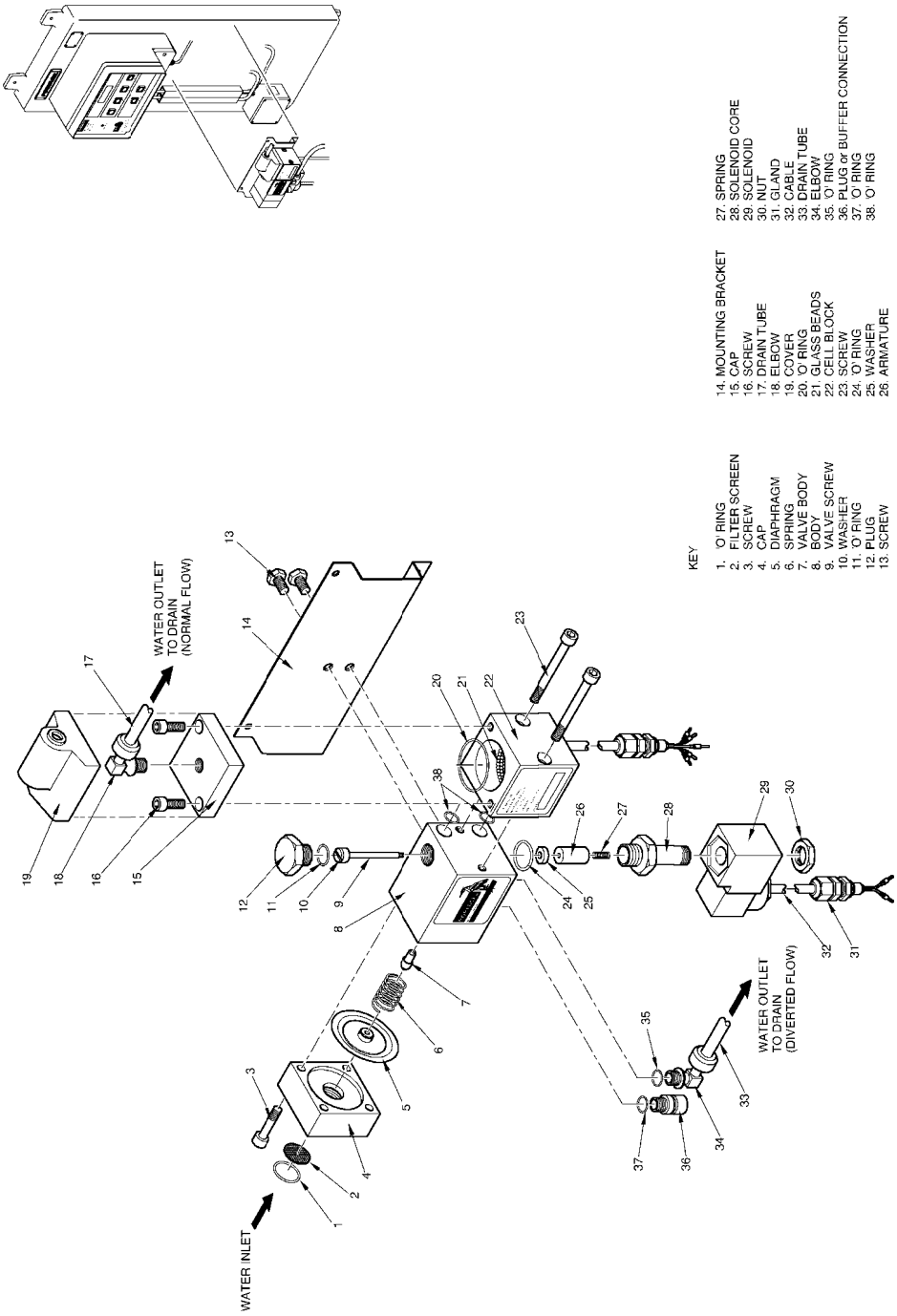

3. SYSTEM INTEGRATION

To enable the Medway 2 Analyser to operate correctly it must be integrated into a system. The analyser has been designed to make integration relatively simple but the extent will depend on the amount of external control required of the analyser as specified by the customer.

3.1 Sample Water Supply

A sample water flow to the measurement cell should be taken from the main line, downstream of any dosing system that may be installed. The branch line to the analyser should contain an isolation valve and connection at the analyser is inch BSP. The required water flow is 0.21 l min (minimum) at a pressure of 1.0 to 5.0 bar.

Water discharge from a carbon column analyser is via one 8mm O.D. plastic compression coupling and from a polarising zero analyser it is via two such couplings.

3.2 Electrical Connection

An external main power supply connection of either 230V AC, 110V AC (50 60Hz) or 24V DC is required to the residual monitor power socket.

3.3 Software Interface

For software programming, PC interfacing or external control integration an RS232 connection is required to be made with the relevant socket in the residual monitor.

Chapter 3

Installation and Commissioning

Contents

Para		Page
	INTRODUCTION	**3.3**
1.	**GENERAL**	**3.5**
1.1	Choice of Site	3.5
1.2	Unpacking the Equipment	3.5
2.	**INSTALLING THE MEDWAY 2 ANALYSER**	**3.6**
2.1	Mounting Procedure	3.6
2.2	Electrical Connection	3.8
2.3	Pipework Connection	3.8
3.	**COMMISSIONING**	**3.12**
3.1	General	3.12
3.2	Glossary of Terms	3.12
3.3	Commissioning Procedure	3.12
3.3.1	Preparation	3.12
3.3.2	Calibration	3.13

ILLUSTRATIONS

Fig No		Page
3.1	Drilling Diagrams	3.7
3.2	Residual Monitor	3.9
3.3	Terminal Connection Diagram	3.11
3.4	Medway 2 Calibration Sequence Chart	3.15

TABLES

Table No		Page
3.1	Residual Monitor Display Menus	3.14

INTRODUCTION

This Chapter gives the description required to Install and Commission the Medway 2 Analyser. Procedures for optional items of equipment, when fitted, are similarly described in the appendices to this Manual.

1. GENERAL

These installation and commissioning instructions are prepared assuming that the work will be carried out by an approved and experienced installation and commissioning engineer accustomed to working with this type of equipment and the plant in which the Medway 2 Analyser will be working.

1.1 Choice of Site

When selecting a location for the Medway 2 system the following should be borne in mind:

(a) That an adequate and uninterrupted supply of chlorinated water is available. The supply take-off should not be less than 20 pipe diameters away from the dosing injection point and preferably after an elbow or other such device that produces turbulent water flow. This is to ensure a thorough mix of the chlorine in the water.

(b) The site drain connection to the analyser should be capable of coping with a flow of 0.2 l min and arranged such that a DPD test can be carried out using the discharge from the analyser.

(c) The monitor requires a fused electrical mains supply of 240V AC, 110V AC or 24V DC according to customer specification.

(d) The monitor may be mounted locally to the analyser or remotely, up to the length of the screened cable supplied with the analyser. The mounted height of the monitor should be approximately 1500 mm above floor level for ease of visibility and operation of the push-buttons.

1.2 Unpacking the Equipment

It is advisable to unpack the unit at the site where it is to be installed. Check each item against the packing note and ensure that the consignment is complete, inclusive of any optional equipment ordered, before discarding the packing material.

Examine each item to see that it is undamaged and that all ports etc. are clean and free of packing. Should any items be damaged, it will be helpful for the items to be returned in or with their original packing.

2. INSTALLING THE MEDWAY 2 ANALYSER

WARNING!
Only fully qualified persons should undertake functional testing.

WARNING!
The system may be operated on either 240V AC, 110V AC or 24V DC supply. If the 240V or 110V supply is being used ensure that the equipment is isolated from the supply and verified isolated before carrying out any maintenance or repairs.

WARNING!
It is also important to be aware that when the monitor is isolated from the mains supply, external alarm connections 17 to 26 may still be live from fittings supplied with their own power source.

NOTE:
Opening the front cover of the monitor does not automatically isolate it from the mains supply. Switch off the mains isolator before opening the cover.

2.1 Mounting Procedure

(1) Decide on the mounting position for the monitor then mark and drill the hole positions (Fig 3.1).

(2) Screw or bolt the monitor, as appropriate, to the mounting surface, ensuring it is level. The monitor mounting holes are accessible with the upper panel cover opened and the lower cover removed. The retaining screws of both covers are captive and cannot be fully removed. The upper panel cover has to be pulled forward before it can be hinged outward.

(3) After the monitor is mounted the upper panel cover can be closed and fastened. The lower cover should be left open until wiring is completed.

(4) Decide on the mounting position for the analyser cell then mark and drill the hole positions (Fig 3.1). The analyser is ready mounted on a bracket which can be directly screwed or bolted into position as appropriate.

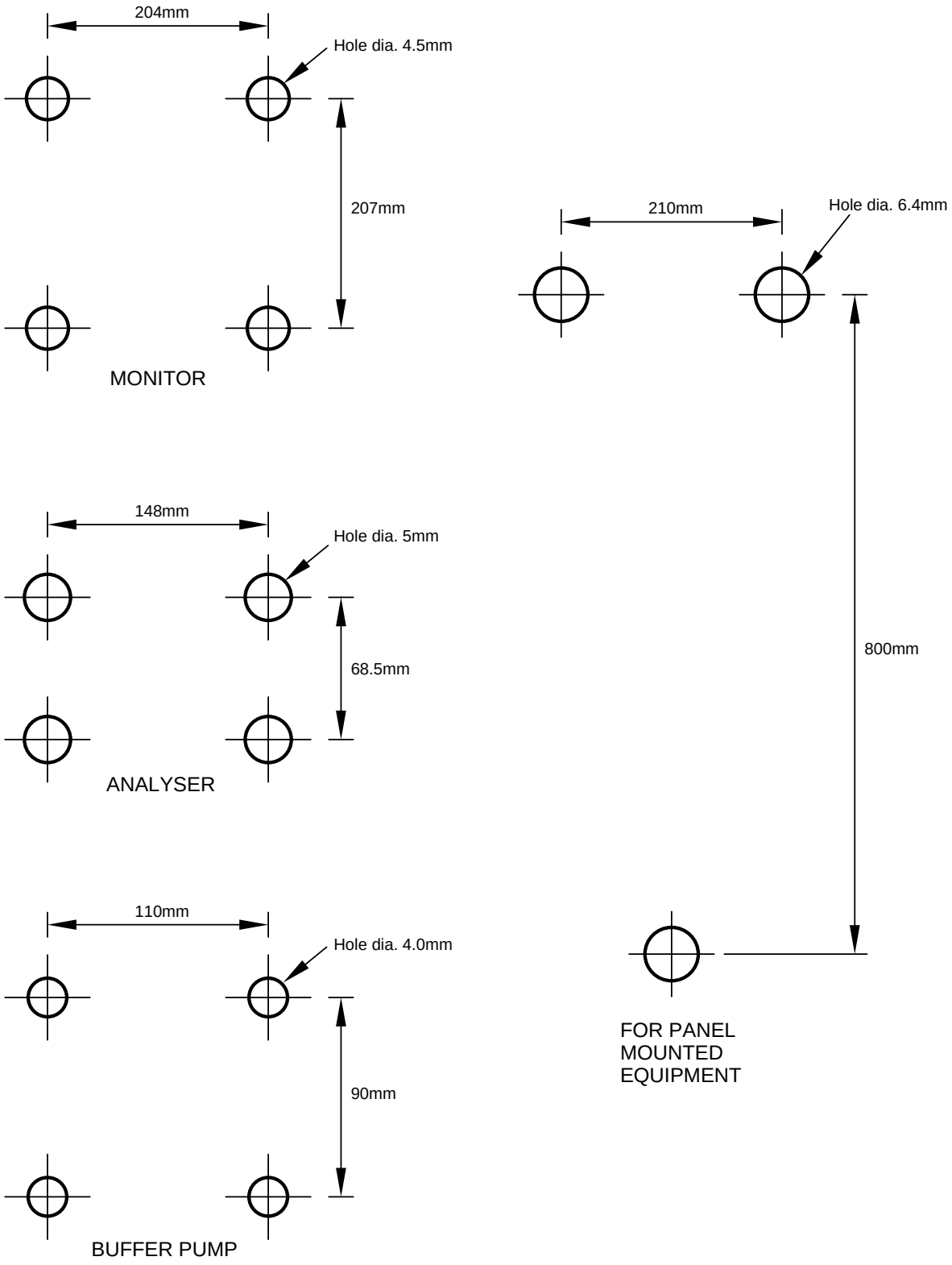

Fig. 3.1 Drilling Diagrams

2.2 Electrical Connection (Figs 3.2 and 3.3)

Refer to the warnings at Paragraph 1.

(1) Connect the two cables, for cell output and solenoid actuation, between the analyser and monitor: these are ready fixed to the analyser. The individual wires of each cable have numbered tags relating to the terminal numbers in the lower section of the monitor. Feed the cables through the 13mm holes in the base of the monitor and locate the cable glands in the holes.

(2) When the cable connections are secure, tighten the glands, ensuring the cables are not strained.

(3) Connect up any remote alarm indicators or process controller residual output, if required by the site, into the monitor.

(4) If the mains supply is to be 240V or 110V connect the plug into its socket and secure with the spring clip.

(5) If the mains supply is to be 24V then a cable entry hole has to be drilled through the lower section of the monitor and the supply wiring connected to the 24V terminals.

(6) Re-locate and secure the lower section cover in place.

2.3 PIPEWORK CONNECTION

NOTE:
Steps (2) and (3) below will depend on the type of analyser fitted. Only one will be applicable.

(1) Connect the sample water supply line to the analyser cell. Ensure the gauze filter screen is in place in the inlet port.

(2) **Carbon Column Analyser** - connect the (single) sample drain line from the analyser to waste.

(3) **Polarising Zero Analyser** - connect the two sample drain lines from the analyser to waste.

(4) The Medway 2 Analyser is now ready for commissioning.

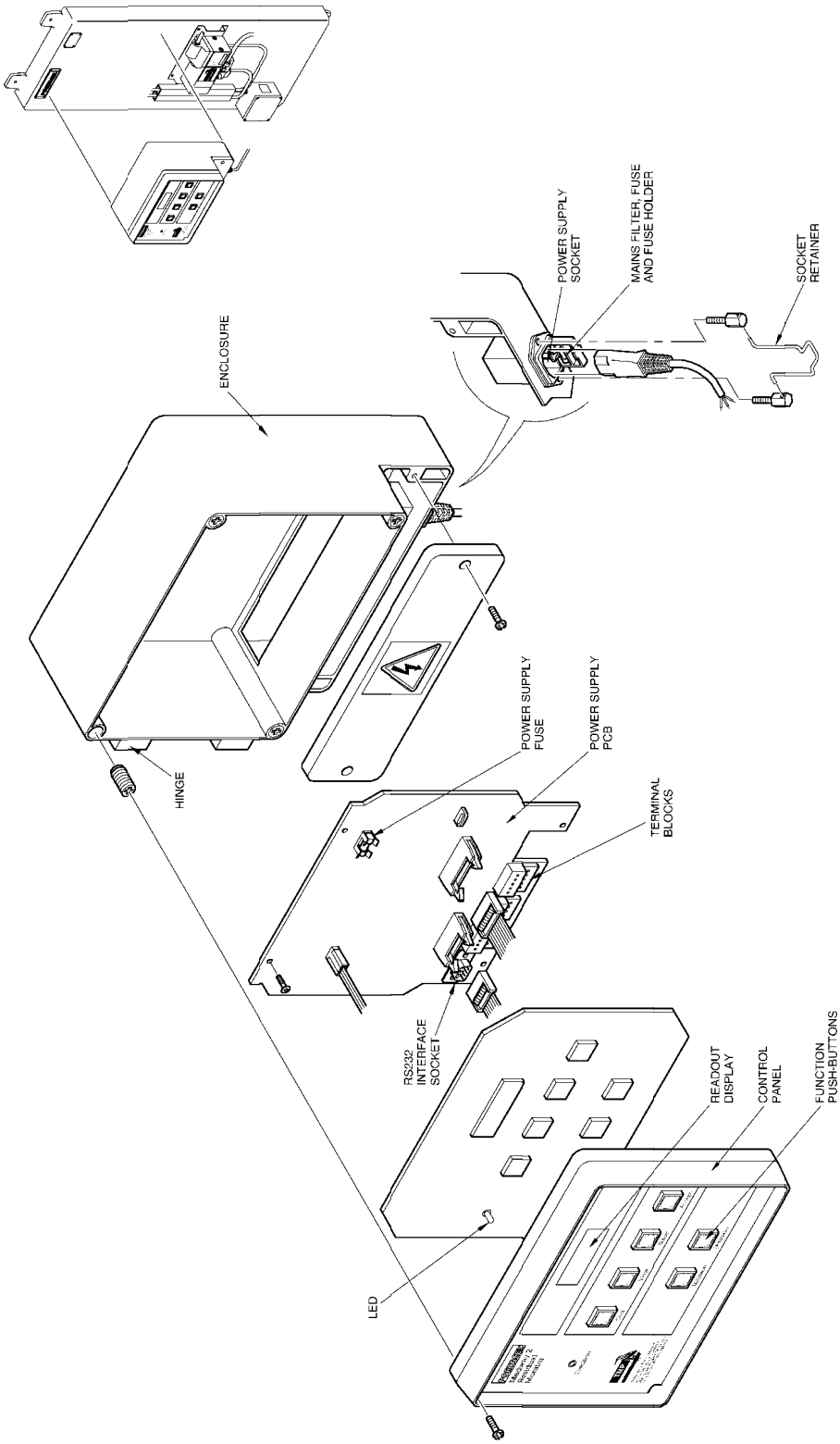

Fig. 3.2 Residual Monitor

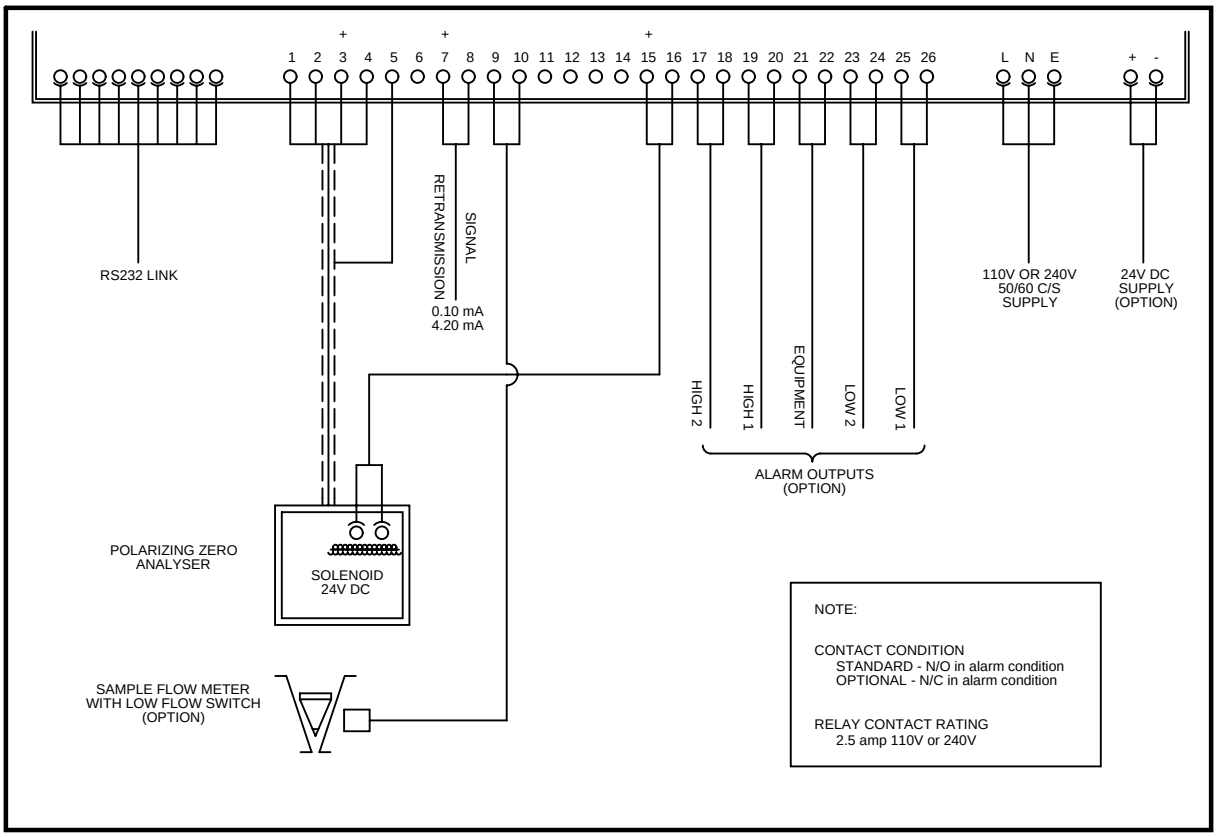

Fig. 3.3 Terminal Connection Diagram

3. COMMISSIONING

3.1 General

The Medway 2 Analyser must have been installed according to the instructions in Paragraph 2 - **INSTALLATION,** with all components fixed securely and pipework connections tight.

In preparing these commissioning instructions it is assumed that the work will be carried out by an approved and experienced commissioning engineer accustomed to working with this type of equipment and the plant in which the Analyser System will be working.

3.2 Glossary of Terms

Following are definitions of terms that will be seen during the setting up of the system where Ranges and Span are referred to:

(a) **Output Range (OP)** - This is the range of current in mA used by the monitor when sending signals to external alarms and process controllers. The options are 0-10 mA or 4-20 mA.

(b) **Input Range (IR)** - This is the range of the value of residual chlorine which the treatment plant will be operating within, e.g. 0-5 mg l or 0-20 mg l.
When the input range is displayed on the monitor only the maximum value of the range will be shown, the minimum being implied, e.g. for 0-5 mg l range, only 5 will be displayed.

(c) **Zeroing** - This the Medway 2 does automatically. After sufficient time to allow the water around the electrodes to be cleared of chlorine the monitor sets itself to zero. Monitoring will then restart and the readjusted reading displayed.

(d) **Span** - Following the eroing, a second datum figure is needed to establish a span. This must be obtained from a DPD test of the sample water passing through the cell. This figure is entered during the calibration procedure at the SPan step.

3.3 Commissioning Procedure

3.3.1 Preparation

(1) Open the supply of sample water from the main to the analyser. Allow the sample water to pass through the cell for 24 hours to allow the glass beads to clean the electrodes ready for calibration.

(2) Switch on the electrical power supply to the monitor. Ignore any display readings at this point.

(3) The system is now ready for calibration. Prior to calibration, determine and list the settings that will be required for input during the procedure. The actual settings required will depend on the extent of external interfacing the system is to have, the Notes column of Table 3.1 gives a guide.

3.3.2 Calibration (Fig 3.4)

Table 3.1 lists the display readouts that will be seen following each consecutive press of the View push-button, along with their meaning and parameter ranges. Certain of the displays and menus are dependent on the optional equipment. This table is shown here for reference only as the View push-button is not used during calibration.

Proceed as follows:

(1) Press the Select push-button. SEt will be displayed.

(2) Press the Accept push-button. Four hyphens will appear for entry of the factory pre-set passcode. Each hyphen will flash in anticipation of a number entry.

(3) Enter the first digit (of the same passcode). Use the Increase and Decrease push-buttons to bring up a number and then to change it as needed. When the required number has been obtained press the Accept push-button, the next hyphen will then flash.

(4) Repeat step (3) for the 2nd, 3rd and 4th numbers of the passcode. When the fourth number has been entered, pressing the Accept push-button will display rang if the passcode has been accepted.

(5) With reference to the calibration sequence chart, Figure 3.4, and Table 3.1, continue through the calibration sequence as shown and enter all relevant values.

Pressing the Select push-button will display the next main menu. Pressing the Accept push-button will display the first option of the sub-menu. Pressing Select from a sub-menu will display the next sub-menu option. Pressing Accept, with a particular sub-menu option displayed, will bring up the relevant value of the option. Pressing the Increase or Decrease push-buttons will allow the value to be changed.

Pressing Accept, to accept a change of value, will display the next sub-menu option. The final sub-menu option is always an Esc option from where Select will return to the first sub-menu option and Accept will display the next main menu.

(6) The Test button provides the facility to give a variable output signal when the menu is at the OP stage of range options. With OP displayed, press Test, then use the Increase or Decrease push-buttons to set the required output value between 0 and 20mA. The signal value will not be displayed on the monitor but must be read at the remote equipment (e.g. chart recorder). Press Test again on completion to return to the OP display.

Table 3.1 Residual Monitor Display Menus

Key Press	LCD Display Main menu	Sub-menu	Status	Notes Parameter Range
0	Current value of residual chlorine			
1st	- - - -			Software version Passcode
2nd	rang			**RANGE OPTIONS**
3rd		OP		Output range
4th			Status set	4-20 or 0-10mA
5th		IP		Input range
6th			Value set	0.5, 1.0, 2.0, 5.0, 20.0mg l
7th	Al.r			**ALARMS**
8th		AL.H1		High level alarm 1
9th			Value set	OFF, or between 0 and input range mg l
10th		AL.H2		High level alarm 2
11th			Value set	OFF, or between 0 and input range mg l
12th		AL.L1		Low level alarm 1
13th			Value set	OFF, or between 0 and input range mg l
14th		AL.L2		Low level alarm 2
15th			Value set	OFF, or between 0 and input range mg l
16th	bUFF			**BUFFER PUMP** (optional equip t)
17th			Status set	OFF or ON
18th	Aut.O			**AUTOMATIC ZEROING OF CELL**
19th		Int		Interval between zeroing of cell
20th			Value set	OFF or between 1 and 1000 hrs
21st		PEr.		Period spent zeroing cell
22nd			Value set	60 or 180 seconds
23rd		rEC.		Period before monitoring after zeroing
24th			Value set	90 seconds
25th	r323			**RS232 LINK SET-UP**
26th		baud		Baud rate
27th			Value set	1200, 2400, 4800, or 9600
28th		blt		Byte size
29th			Value set	7 bit or 8 bit
30th		Par.		Parity
31st			Status set	NONE, ODD OR EVEN
32nd	diSP			**DISPLAY**
33rd			Status set	Display CONT(inuous) or bLA(nked) out
34th	Returns to give current value of residual chlorine			

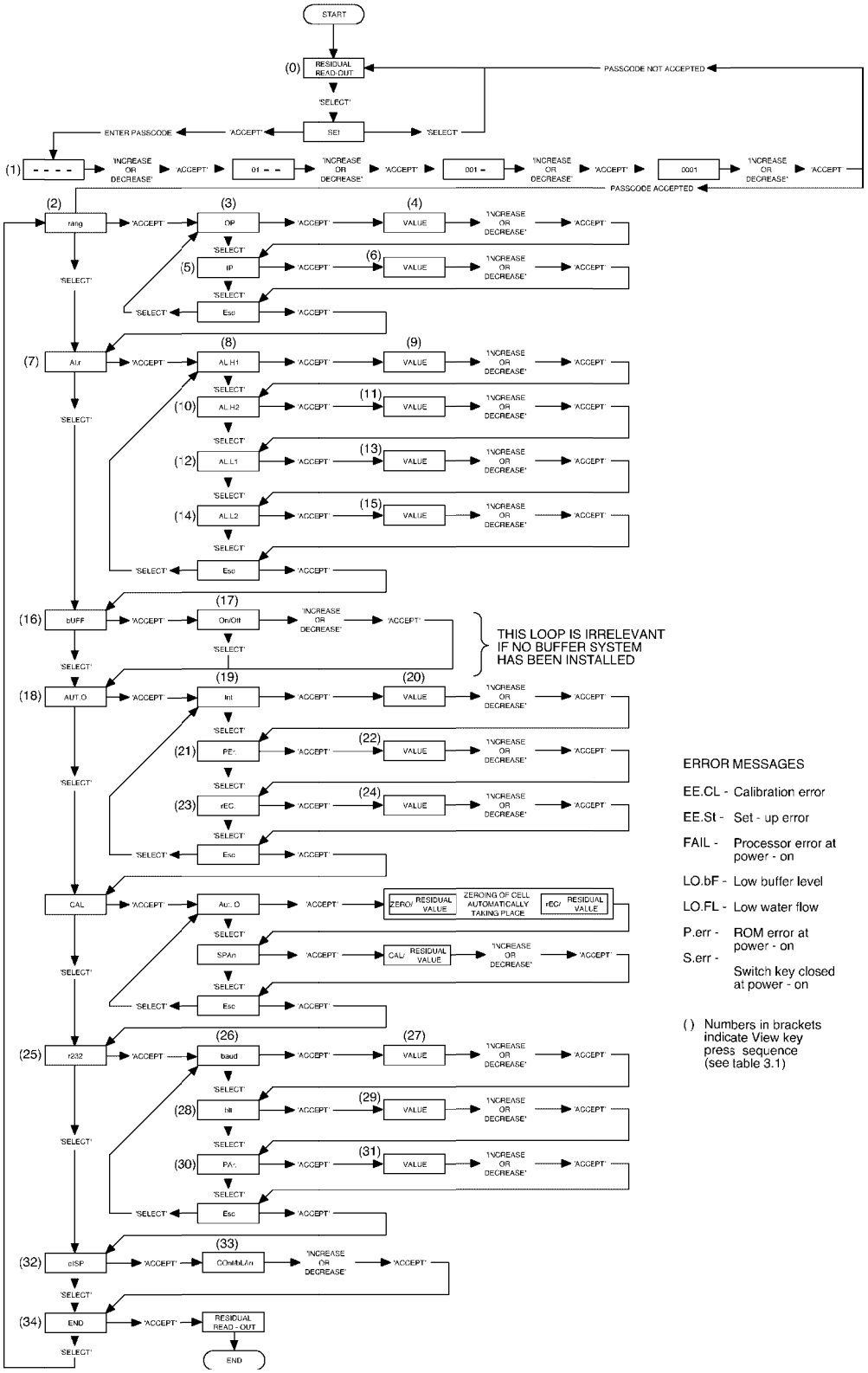

ERROR MESSAGES

EE.CL - Calibration error

EE.St - Set - up error

FAIL - Processor error at power - on

LO.bF - Low buffer level

LO.FL - Low water flow

P.err - ROM error at power - on

S.err - Switch key closed at power - on

( ) Numbers in brackets indicate View key press sequence (see table 3.1)

Following calibration, any remote alarm indications with which the system has been equipped will need to be checked. The two sources of alarm conditions that the remote alarms may be relaying are equipment and or process alarms.

Equipment alarms are initiated by the buffer container low level switch or the sample water low flow switch. The process alarms are initiated by the monitor sensing a: low low low high or high high, residual chlorine reading.

If any of the optional equipment has been specified and fitted the relevant installation and commissioning information will be found in Chapter 6 Options of this Manual.

Chapter 4

Operating Instructions

Contents

Para		Page
	INTRODUCTION	4.3
1.	GENERAL	4.6
2.	START-UP	4.6
3.	OPERATION	4.6
4.	SHUTDOWN	4.6

ILLUSTRATIONS

Fig No		Page
4.1	Medway 2 Analyser - Polarising ero Type	4.5

TABLES

Table No		Page
4.1	Residual Monitor Display Menus	4.7

INTRODUCTION

This Chapter gives the procedures to operate the Medway 2 Analyser.

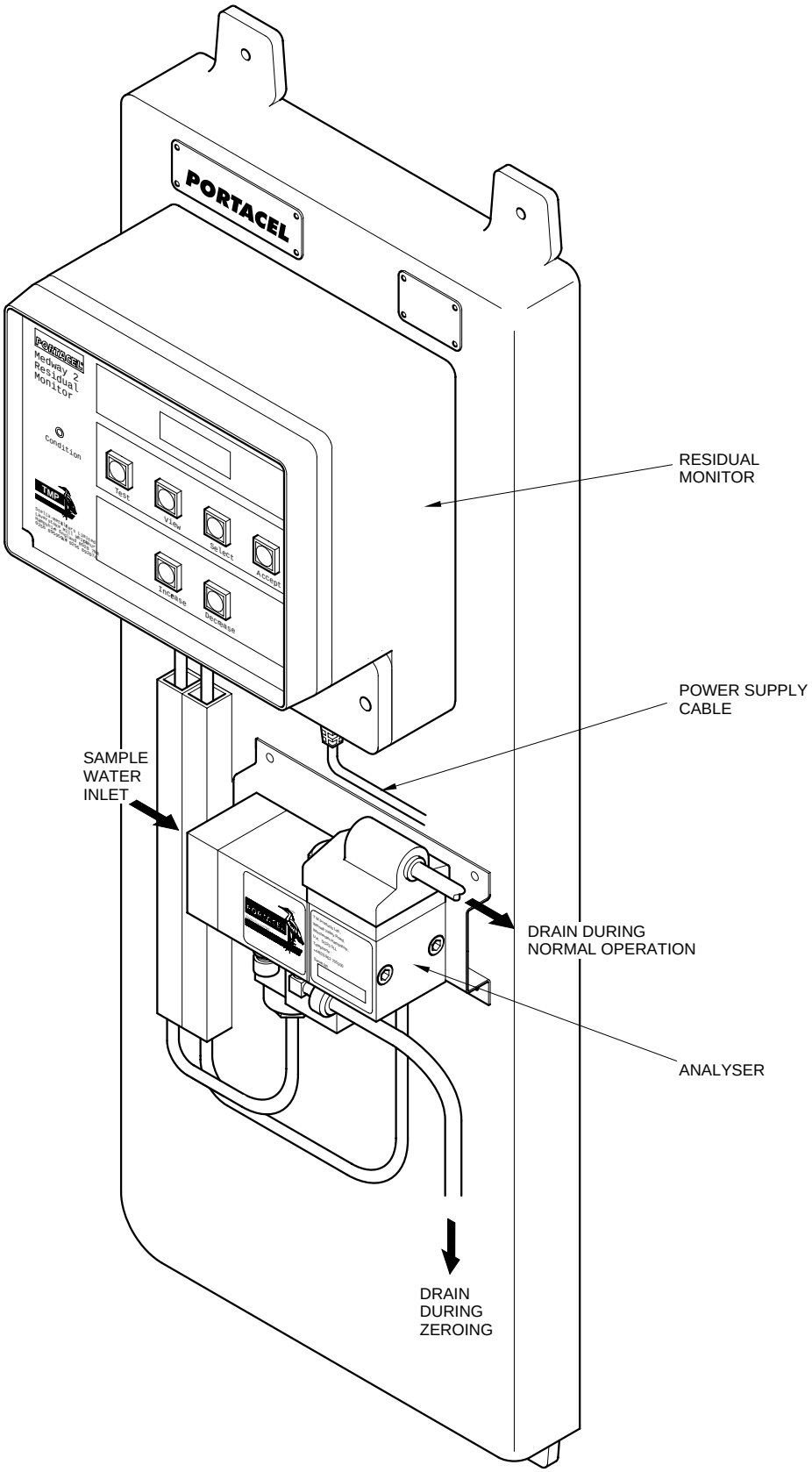

Fig. 4.1 Medway 2 Analyser - Polarising Zero Type

1. GENERAL

The procedures detailed in this chapter are the procedures to operate the basic Medway 2 Analyser monitoring system (Fig 4.1). Further instructions relevant to any optional equipment fitted will be found in Chapter 6 Options of this Manual.

2. START-UP

WARNING!
Only fully qualified persons should undertake functional testing or make changes to operating parameters.

To start the Medway 2 proceed as follows:

(1) Open up the flow of sample water to the analyser and allow to flow for 24 hours to allow the glass beads time to clean the electrodes.

(2) Switch on the mains power supply to the monitor. The accuracy of the first chlorine value displayed cannot be relied upon until the first automatic calibration has taken place. The time delay until this happens will be as per the set-up value (between 1 and 1000 hours).

(3) Check the set-up parameters are those required. Use the View push-button to scroll through the menus and settings. Refer to Table 4.1 Residual Monitor Display Menus which lists the View key press sequence of events.

Any changes necessary must be made by a person authorised to do so with reference to the calibration and set-up information in Chapter 3 Installation and Commissioning.

(4) Return the monitor to displaying the residual value.

(5) The system can now be left to operate on duty.

3. OPERATION

The Medway 2 Analyser is a monitoring system therefore during operation all that is required is regular observation of the monitor for any alarm condition that may occur.

If any optional remote alarm indicators are incorporated into the system then these also should be watched for so that faults can be rectified quickly.

4. SHUTDOWN

(1) Switch off the mains supply to the monitor.

(2) If the shutdown is to be more than a few days, shut off the sample water supply to the analyser.

Table 4.1 Residual Monitor Display Menus

Key Press	LCD Display Main menu	Sub-menu	Status	Notes Parameter Range
0	Current value of residual chlorine			
1st	- - - -			Software version Passcode
2nd	rang			**RANGE OPTIONS**
3rd		OP		Output range
4th			Status set	4-20 or 0-10mA
5th		IP		Input range
6th			Value set	0.5, 1.0, 2.0, 5.0, 20.0mg l
7th	Al.r			**ALARMS**
8th		AL.H1		High level alarm 1
9th			Value set	OFF, or between 0 and input range mg l
10th		AL.H2		High level alarm 2
11th			Value set	OFF, or between 0 and input range mg l
12th		AL.L1		Low level alarm 1
13th			Value set	OFF, or between 0 and input range mg l
14th		AL.L2		Low level alarm 2
15th			Value set	OFF, or between 0 and input range mg l
16th	bUFF			**BUFFER PUMP** (optional equip t)
17th			Status set	OFF or ON
18th	Aut.O			**AUTOMATIC ZEROING OF CELL**
19th		Int		Interval between zeroing of cell
20th			Value set	OFF or between 1 and 1000 hrs
21st		PEr.		Period spent zeroing cell
22nd			Value set	60 or 180 seconds
23rd		rEC.		Period before monitoring after zeroing
24th			Value set	90 seconds
25th	r323			**RS232 LINK SET-UP**
26th		baud		Baud rate
27th			Value set	1200, 2400, 4800, or 9600
28th		blt		Byte size
29th			Value set	7 bit or 8 bit
30th		Par.		Parity
31st			Status set	NONE, ODD OR EVEN
32nd	diSP			**DISPLAY**
33rd			Status set	Display CONT(inuous) or bLA(nked) out
34th	Returns to give current value of residual chlorine			

Chapter 5

Maintenance

Contents

Para		Page
	INTRODUCTION	**5.3**
1.	**GENERAL**	**5.5**
2.	**REMOVAL AND REPLACEMENT PROCEDURES**	**5.6**
2.1	Changing the Power Supply Fuse	5.6
2.2	Changing the Mains Supply Fuse	5.6
2.3	Flow Controller Refitting	5.9
2.4	Diverter Valve Refitting	5.11
2.5	Changing the Carbon Column	5.13
3.	**FAULT FINDING**	**5.14**
3.1	Monitor Start-Up (FF 1)	5.15
3.2	Monitor Start-Up (FF 2)	5.16
3.3	Chlorine Residual Reading Fluctuates (FF 3)	5.17
3.4	Chlorine Residual Readings Fall Off (FF 4)	5.18
3.5	State of Water Circulation (FF 5)	5.19
4.	**SPARES KITS**	**5.20**
4.1	Carbon Column Analyser	5.20
4.2	Polarising ero Analyser	5.25

ILLUSTRATIONS

Fig No		Page
5.1	Residual Monitor	5.7
5.2	Flow Controller	5.10
5.3	Diverter Valve	5.12
5.4	Carbon Column Analyser	5.23
5.5	Polarising ero Analyser	5.27

Contents (Cont'd)

TABLES

Table No		Page
5.1	Carbon Column Analyser, Spares Kit AA-S1182	5.20
5.2	Carbon Column Analyser, Main Parts	5.20
5.3	Polarising ero Analyser, Spares Kit AA-S1180	5.25
5.4	Polarising ero Analyser, Main Parts	5.25

INTRODUCTION

This Chapter details the maintenance that can be carried out on the Medway 2 Analyser. The Maintenance is confined to a few procedures with flow charts giving a guide to fault finding.

1. GENERAL

Maintenance is restricted to the checking of the items mentioned in this Chapter, the repair by replacement of the principal components listed in Chapter 2 and the replacement of the items supplied in the repair kits and listed in a later section of this Chapter. The safety precautions listed below and at the front of this Manual must be observed at all times.

Further instructions relevant to any optional equipment fitted will be found in Chapter 6 Options of this Manual.

WARNING!
Only fully qualified persons should undertake functional testing or make changes to operating parameters.

WARNING!
The system may be operated on either 240V AC, 110V AC or 24V DC supply. If the 240V or 110V supply is being used ensure that the equipment is isolated from the supply and verified isolated before carrying out any maintenance or repairs.

WARNING!
It is also important to be aware that when the monitor is isolated from the mains supply, external alarm connections 17 to 26 may still be live from fittings supplied with their own power source.

NOTE:
Opening the front cover of the monitor does not automatically isolate it from the mains supply. Switch off the mains isolator before opening the cover.

2. REMOVAL AND REPLACEMENT PROCEDURES

2.1 Changing The Power Supply Fuse (Fig 5.1)

(1) Isolate the main power supply to the monitor.

(2) Unfasten the captive screws securing the panel front cover and hinge open the cover.

(3) Identify the fuse held in spring clips at the top right of the PCB inside the monitor. Extract and test the fuse. Renew if necessary (20mm, 1A, 12V cartridge type).

(4) Re-secure front cover and switch on power.

(5) Check the chlorine residual value is again being displayed.

2.2 Changing the Mains Supply Fuse (Fig 5.1)

(1) Isolate the main power supply to the monitor.

(2) Spring back the retaining clip and unplug the power supply cable.

(3) Pull down the fuse holder located behind the pins in the socket.

(4) Unclip the fuse from its holder. Test the fuse and renew if necessary (20mm, 315mA, 250V, anti-surge cartridge type).

(5) Refit the fuse, push the holder back up into the socket. Plug in the supply cable and fit the retaining clip then switch on the power supply.

(6) Check the chlorine residual value is again being displayed.

Fig. 5.1 Residual Monitor

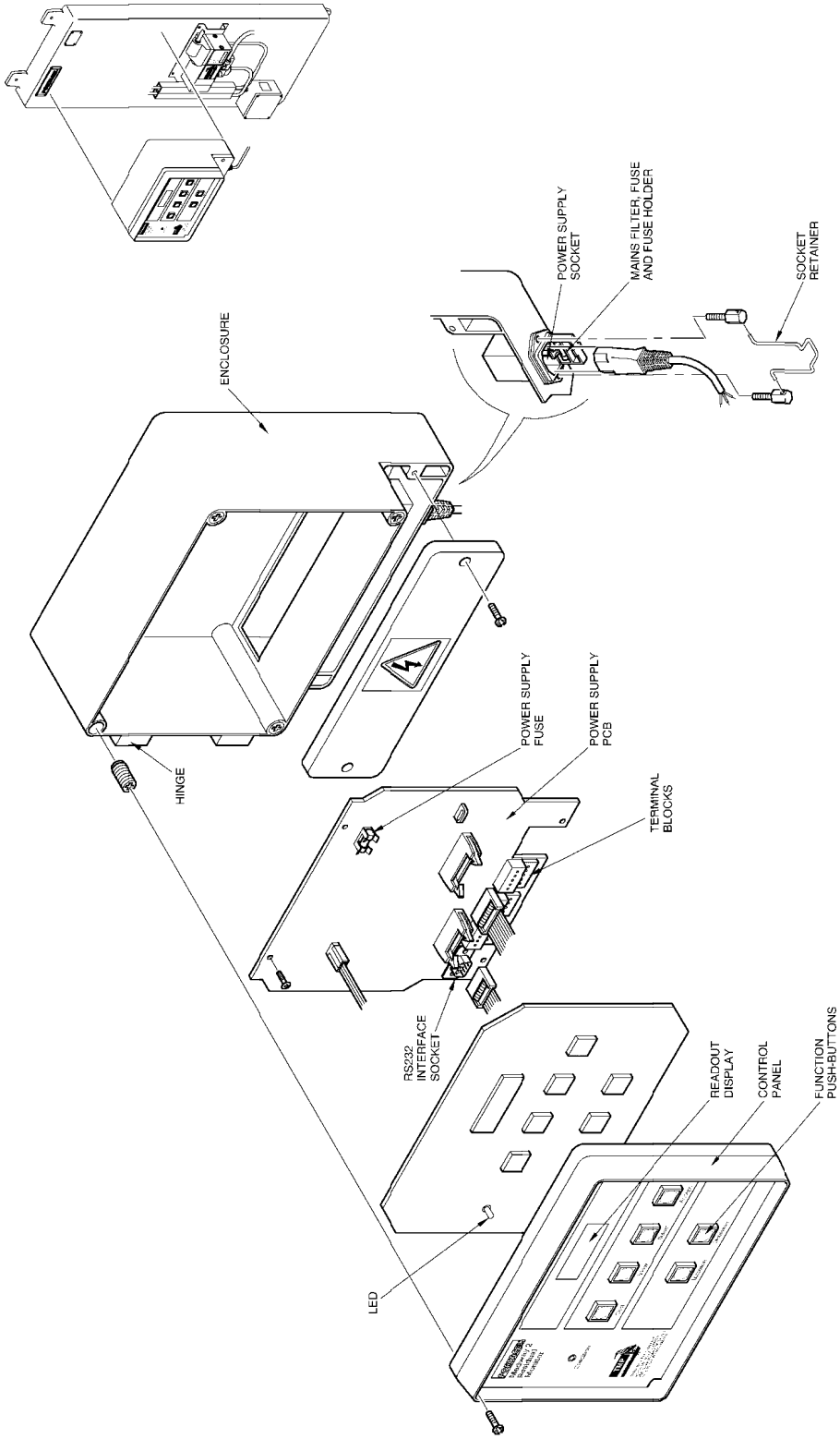

2.3 Flow Controller Refitting (Fig 5.2)

The flow controller can be dismantled as follows:

(1) Shut down the sample water supply to the analyser cell and switch off the main power supply to the monitor.

(2) Disconnect and remove the sample water supply pipe from the diaphragm housing cover.

(3) Remove the four Allen screws retaining the outer housing and lift away to reveal the diaphragm assembly. Remove both the diaphragm assembly and the spring behind it.

(4) Recover the filter screen and the O ring retaining it from the inlet side of the housing cover.

(5) Thoroughly clean and examine all components and renew any that are damaged or worn. The diaphragm assembly must be replaced as a whole if necessary. Great care must be exercised when cleaning the central orifice of the diaphragm assembly as this controls the flow rate, use only soft fuse wire to clear it.

(6) Inspect also the valve seat. If damaged a new valve housing will be required.

(7) Reassembly is a reversal of steps (1) to (4). Ensure the spring is seated squarely behind the diaphragm as the housing cover is replaced and that the diaphragm itself is fitted with the white valve seating on the inside. Hold the cover in place by hand until all screws are loosely fitted then fully tighten the screws.

(8) Reconnect the pipework, open the sample water supply and switch on the electrical power supply.

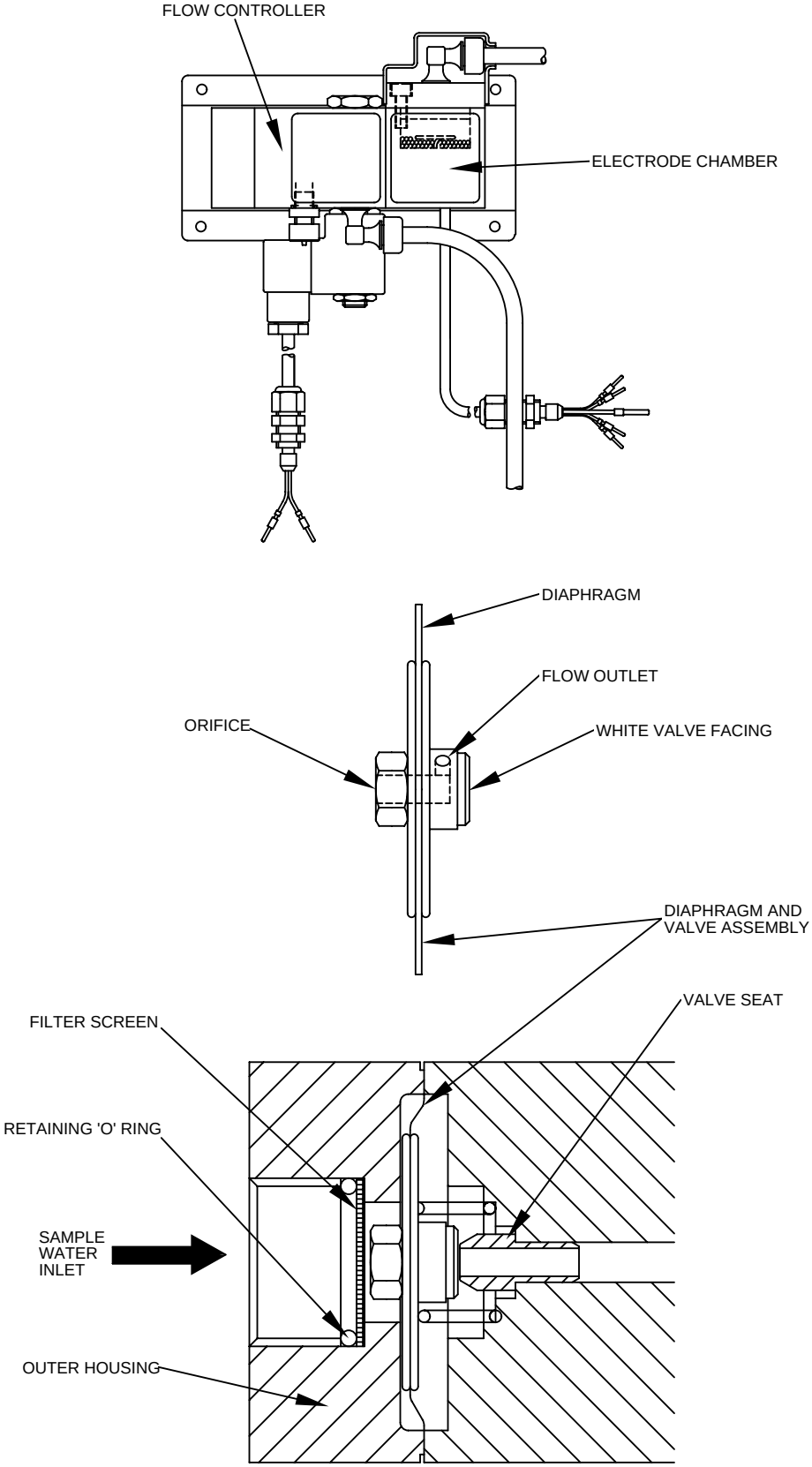

Fig. 5.2 Flow Controller

2.4 Diverter Valve Refitting (Fig 5.3)

The diverter valve can be dismantled as follows:

(1) Shut off the sample water supply to the analyser cell and switch off the main power supply to the monitor.

(2) Unscrew and remove the top plug (24mm A F) complete with the O ring seal.

(3) Unscrew and remove the bottom nut (19mm A F). Slide the solenoid coil assembly off the solenoid core.

(4) Unscrew the solenoid core from the valve housing (22mm A F).

CAUTION!
Do not use a grip on the core to undo it. The outer surface must not be damaged.

(5) Slide the core off the armature and recover both, the spring from within the armature recess of the core, and the O ring seal from around the threaded section.

(6) Unscrew and remove the armature from the valve spindle. Avoid damage to the armature by using a strap wrench if necessary to hold it and a screwdriver in the slot at the top of the spindle.

(7) Withdraw the valve spindle from the top of the valve housing. Recover the upper and the lower valve discs from the spindle. The lower disc will fall free as the spindle is removed.

(8) Examine the O rings and valve discs for damage and hardening. Replace with new if necessary. Inspect the upper and lower valve facings in the housing for pitting or other damage, the housing will need replacing if damage is found. Check the armature and coil for scoring and other damage, renew if needed.

(9) Slide the first valve disc into position under the head of the spindle. Locate the spindle back in the valve housing then fit the lower valve disc onto the lower end of the spindle.

(10) Screw the armature onto the spindle as tightly as possible **by hand only.**

(11) Fit the O ring seal in position on the solenoid core and locate the spring centrally in the base of the core. (If working at a bench, it will be easier to invert the valve when fitting the spring and solenoid core). Carefully screw the core into the housing ensuring the spring locates into the armature recess. Check by pressing the valve spindle which should be free to move. Do not over-tighten the solenoid core against the plastic housing.

(12) Locate the solenoid coil assembly in position over the core and tighten the bottom nut.

(13) Replace the O ring seal on the top plug and resecure the plug into the housing. Do not over-tighten against the plastic housing.

(14) Open up the sample water supply and switch on the electrical power.

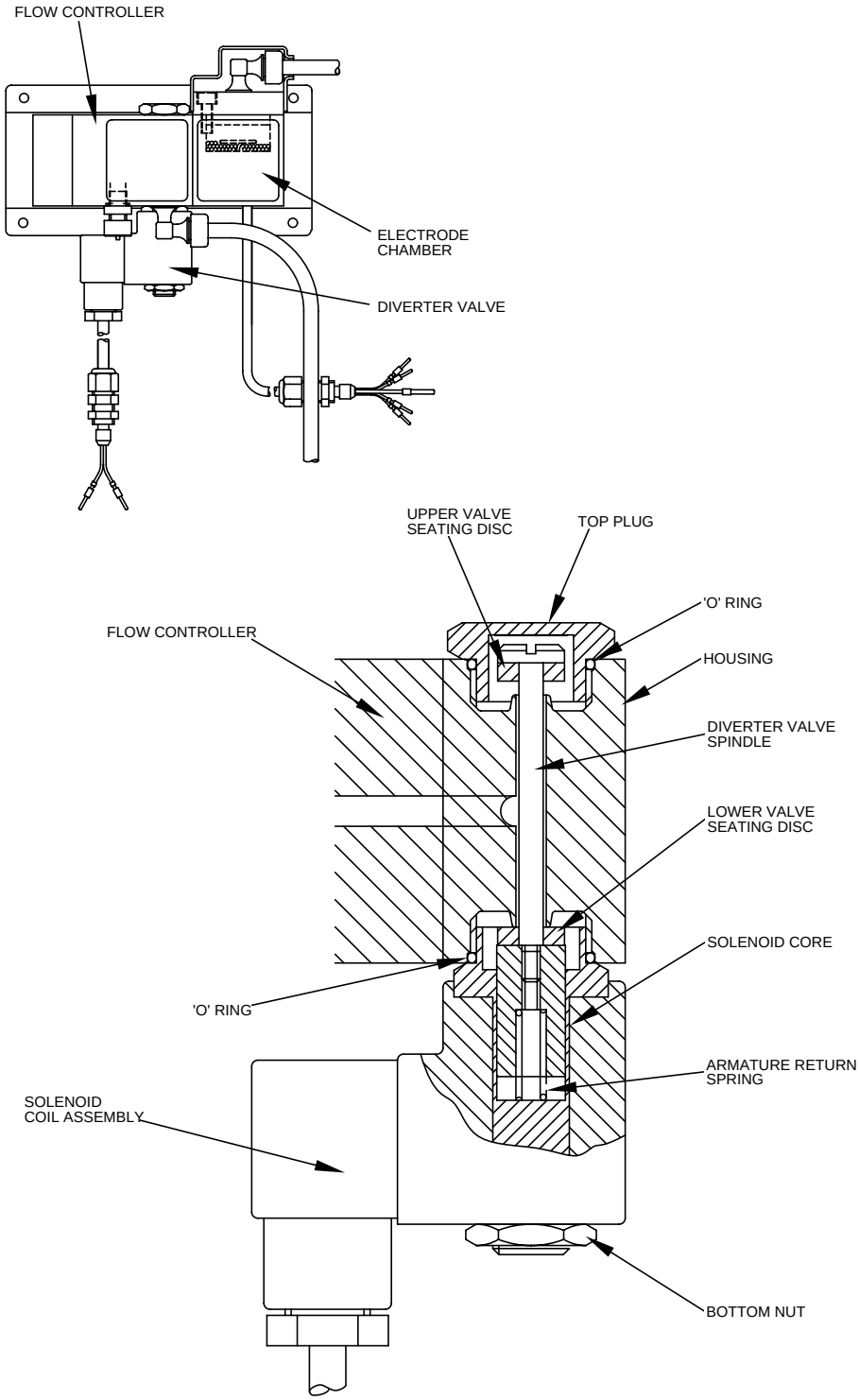

Fig. 5-3 Diverter Valve

2.5 Changing the Carbon Column

The carbon column can be removed for inspection and replacement of the element as follows:

(1) Unscrew the cylinder from its housing. A strap wrench may be used if needed. Recover the O ring seal.

(2) Unscrew the carbon column from the housing. A strap wrench may be used if needed. Recover the flat washer.

(3) Inspect the O ring and flat washer for damage and deterioration. Renew if necessary. Examine the condition of the carbon element and renew if necessary.

(4) Refitting is a reversal of the removal procedure. Avoid damage to the seals when refitting them and tighten both the carbon element and cylinder firmly but **hand-tight only.**

3. FAULT FINDING

The following procedures represent a selection of the main checks that can be carried out. As with all Fault Finding, the success of the task will rely heavily on the skill of the Engineer at the site. The fault diagnosis section is divided into flow charts, intended to be used to remind an experienced engineer which items to check for some faults that may occur. None of the flow charts give detailed procedures for removal and replacement.

Error messages encountered will be:

(I)	EE.CL	-	Calibration error
(II)	EE.St	-	Set-up error
(III)	FAIL	-	Process error at power on
(IV)	LO.bF	-	Low buffer level
(V)	LO.FL	-	Low water flow
(VI)	P.err	-	ROM error at power on
(VII)	S.err	-	Switch key closed at power on
(VIII)	SS.St	-	**TBA**

3.1 Monitor Start-Up (FF 1)

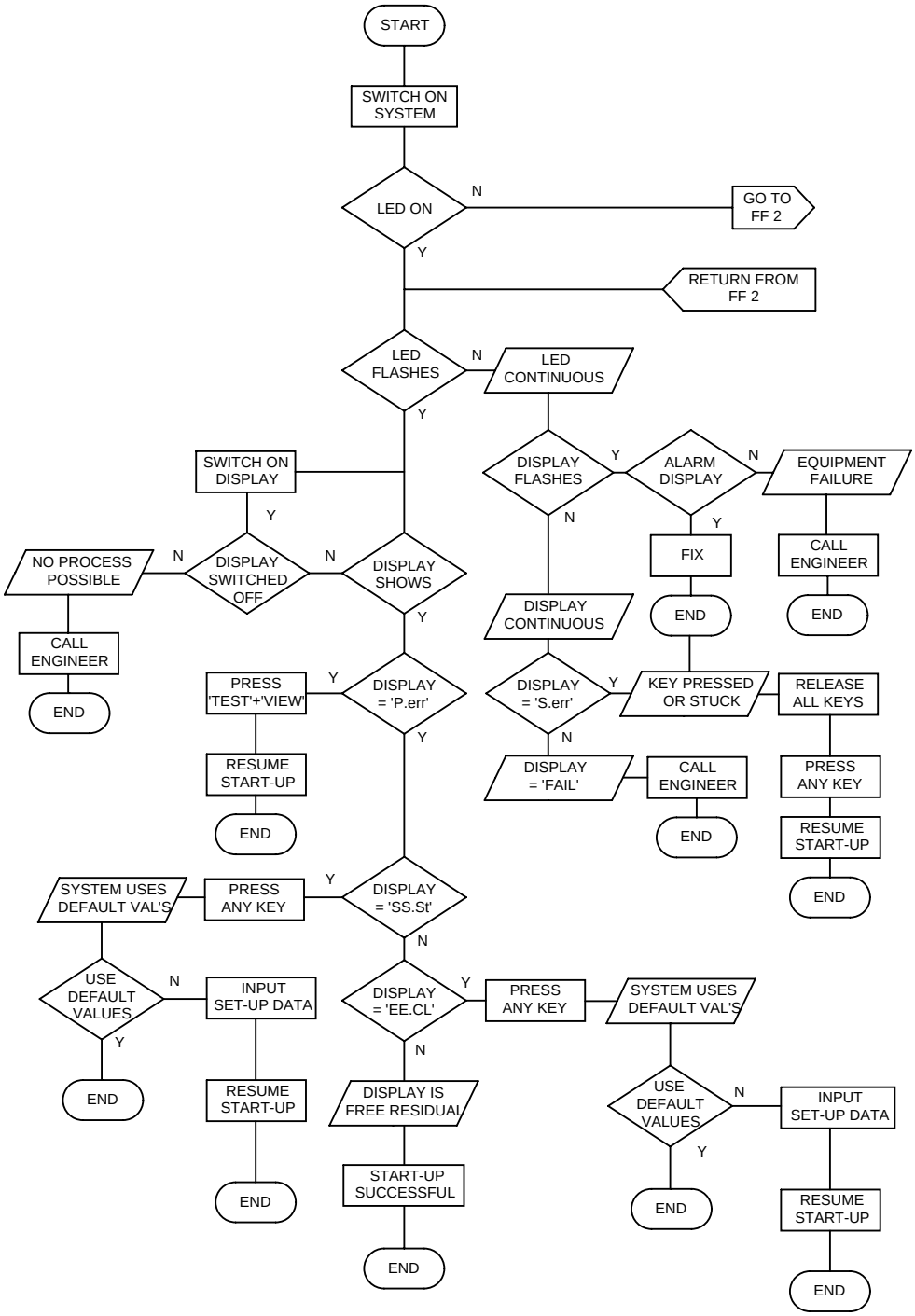

3.2 Monitor Start-Up (FF 2)

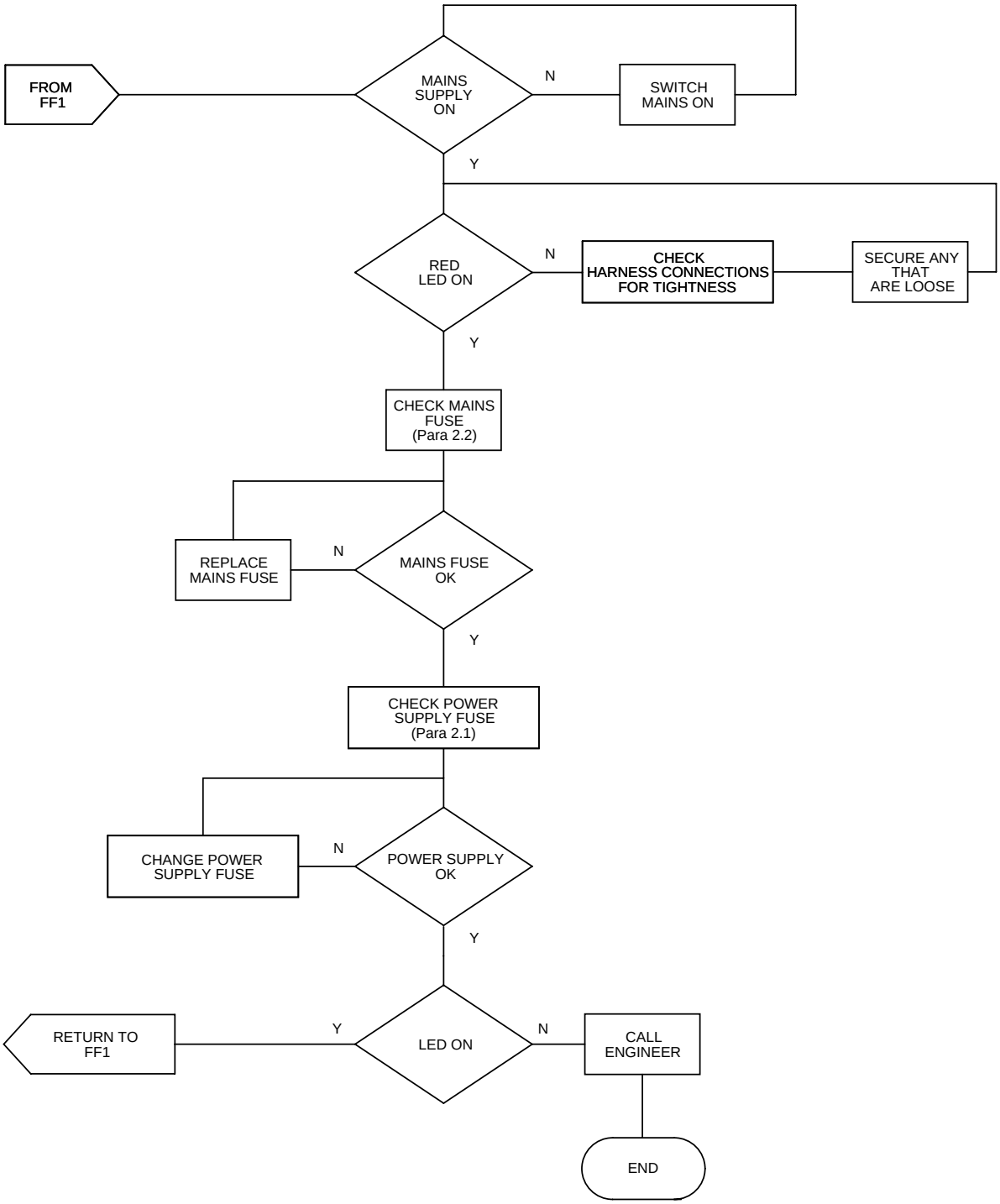

3.3 Chlorine Residual Reading Fluctuates (FF 3)

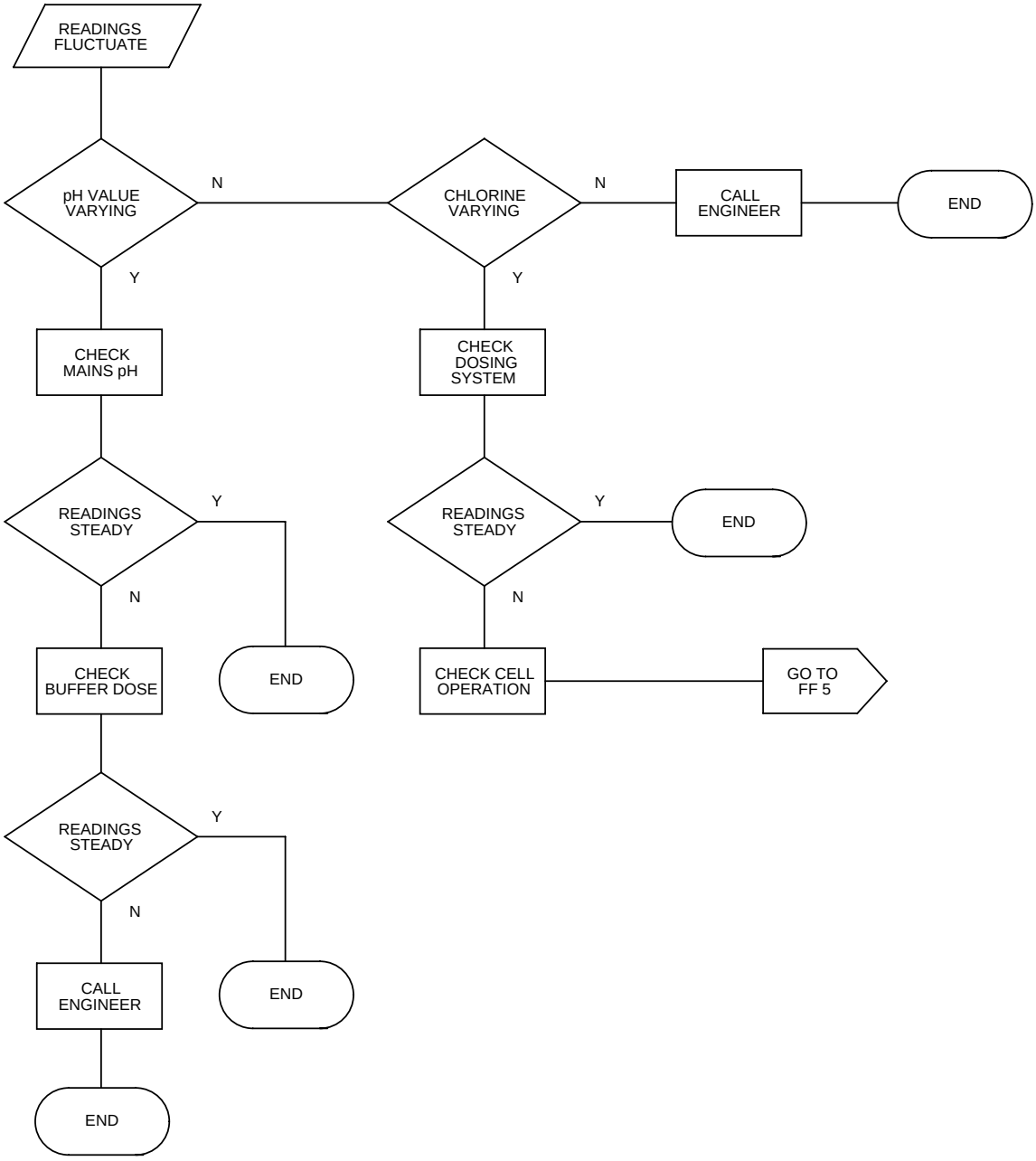

3.4 Chlorine Residual Readings Fall Off (FF 4)

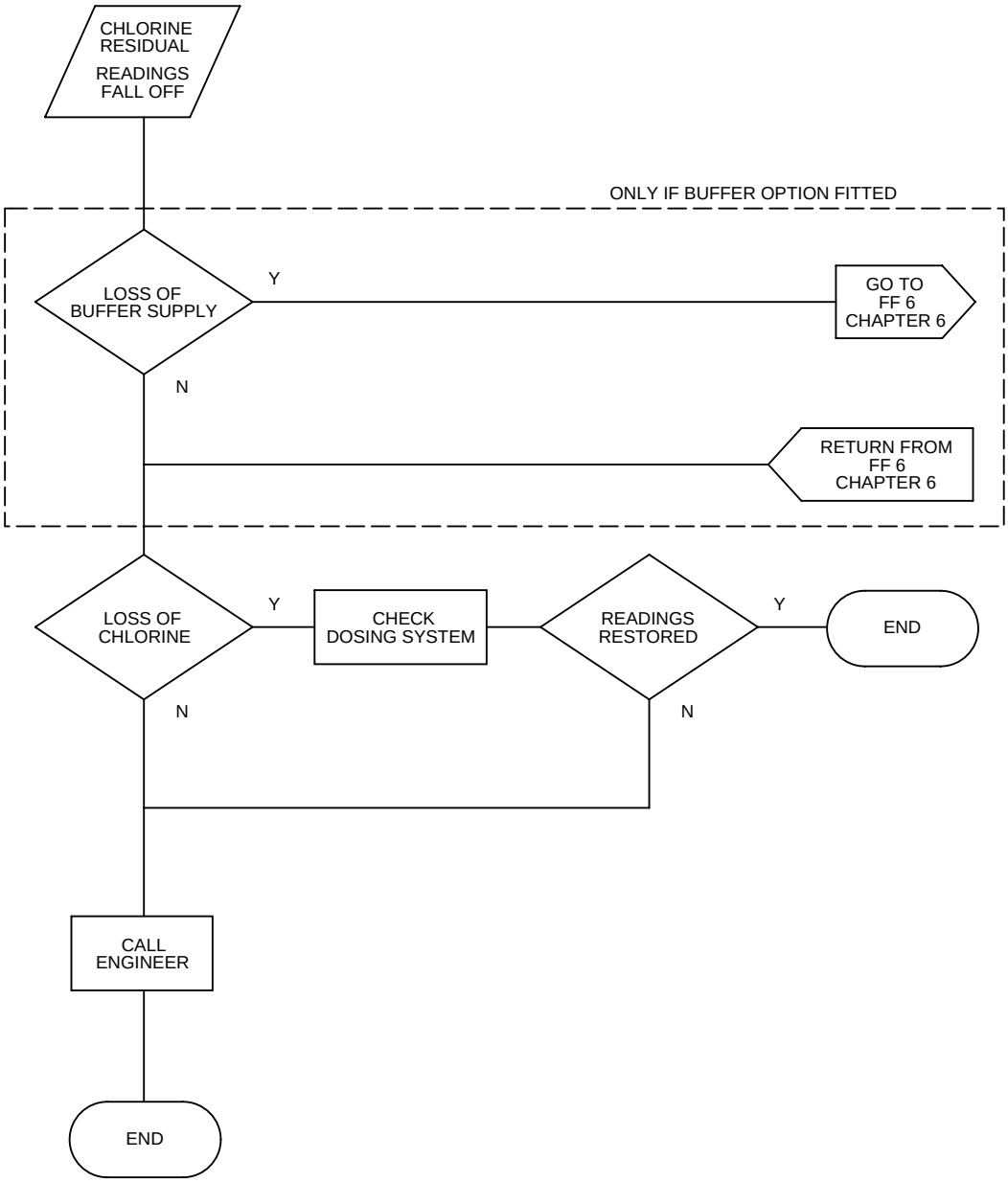

3.5 State of Water Circulation (FF 5)

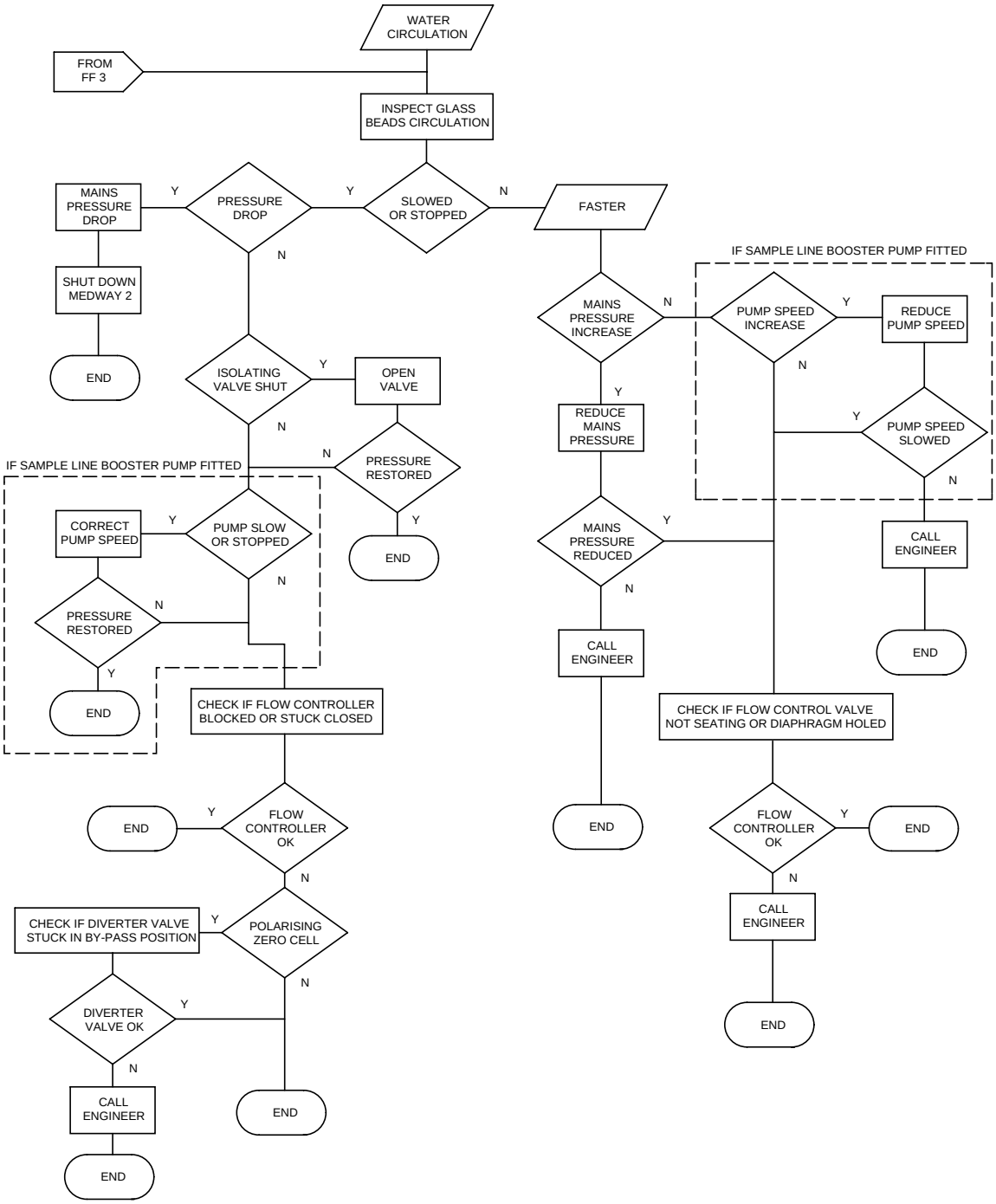

4. SPARES KITS

The following tables list the Portacel part numbers for the items shown in Figures 5.4 and 5.5.

An installation will be supplied with only the carbon column type analyser or the polarising zero type analyser, not both. The following paragraphs and tables list firstly, the items comprising the relevant spares kit, followed by a list of the remaining main parts.

4.1 Carbon Column Analyser

Table 5.1 Carbon Column Analyser, Spares Kit AA-S1182 (Fig. 5.4)

Fig. Item Reference	Description	Part Number
1	O Ring	OB16
2	Filter Screen	FA33
8 and 18	O Ring	OB95
9 and 19	Washers (valve discs)	WA60
14 and 16	O Ring	OB118
15	Plug or Buffer Connector	PL45 or NC119
28	O Ring	OB96
34	O Ring	OB93
39	Drain Tube	TF37
43	O Ring	OB2

Table 5.2 Carbon Column Analyser, Main Parts (Fig. 5.4)

Fig. Item Reference	Description	Part Number
3	Screw	SM119
4	Diaphragm Assembly	AA-S624
5	Spring	SL72

Fig. Item Reference	Description	Part Number
6	Valve Seat	SD102 (supplied with item 11 only)
7	Plug	PL40
10	Valve Screw	SC60
11	Body	BH170
12	Bracket	BN232
13	Screws	SM121
17	Plug	PL45
20	Armature	FB767
21	Spring	SL73
22	Solenoid Core	Part of Item 23
23	Solenoid	VD10
24	Bottom Nut	Part of Item 23
25	Cable	WE2
26	Cable Gland	GD34
27	Screw	SM141
29	Washer	WA59
30	Carbon Column Element	AA-S625
31	Filter Body (column cylinder)	BK82
32	Cell Block	AA-S1083
33	Balls (glass beads)	BA23
35	Screws	SM120
36	Cap	CC106
37	Screws	SM123

Fig. Item Reference	Description	Part Number
38	Elbow	PD55
40	Cover	CP115
41	Cap (Flow Controller)	CC107
42	Housing (Carbon Column)	HD80

Fig. 5.4 Carbon Column Analyser

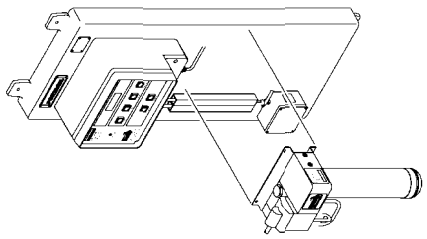

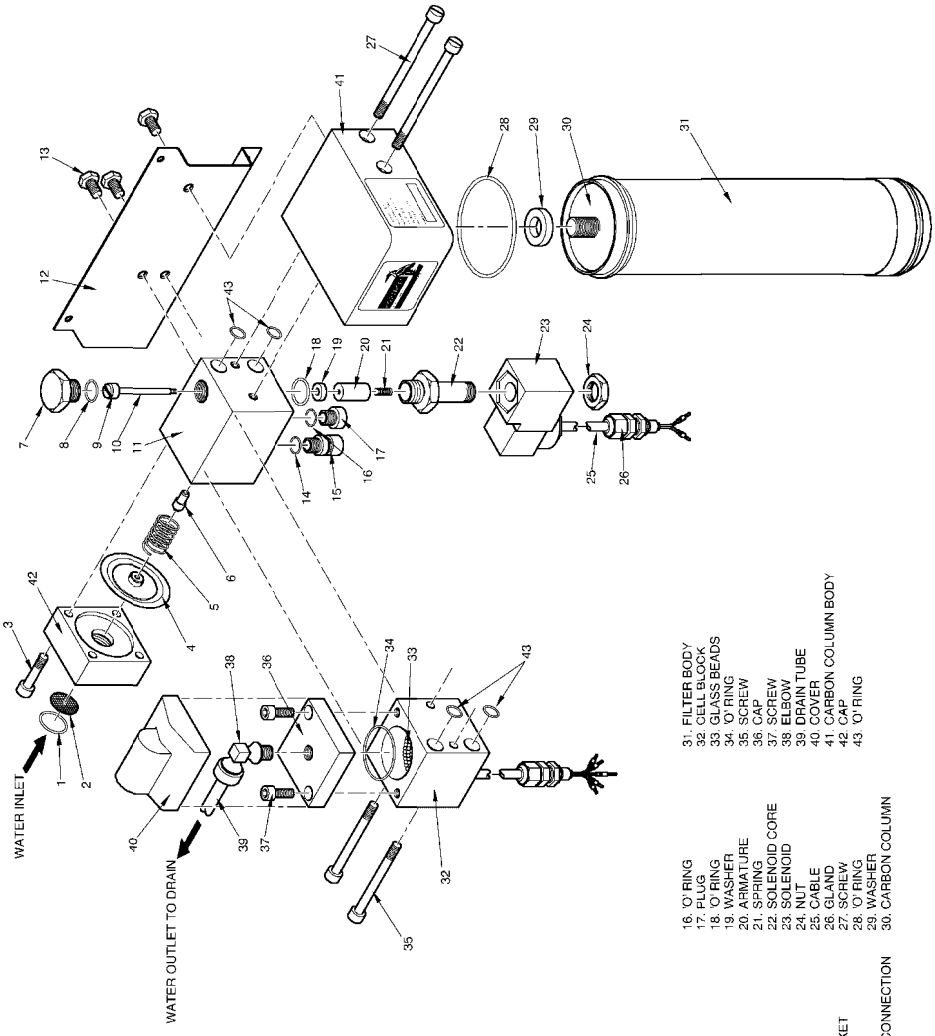

4.2 Polarising Zero Analyser

Table 5.3 Polarising Zero Analyser, Spares Kit AA-S1180 (Fig. 5.5)

Fig. Item Reference	Description	Part Number
1	O Ring	OB16
2	Filter Screen	FA33
10 and 24	Washers (valve discs)	WA60
11	O Ring	OB95
17	Drain Tube	TF37
20	O Ring	OB93
24	O Ring	OB95
35	O Ring	OB118
37	O Ring	OB118
38	O Ring	OB2

Table 5.4 Polarising Zero Analyser, Main Parts (Fig. 5.5)

Fig. Item Reference	Description	Part Number
3	Screw	SM119
4	Cap	CC107
5	Diaphragm Assembly	AA-S624
6	Spring	SL72
7	Valve Seat	SD102 (supplied with item 8 only)
8	Body	BH170
9	Valve Screw	SC60

Fig. Item Reference	Description	Part Number
12	Plug	PL40
13	Screws	SM121
14	Bracket	BN232
15	Cap	CC106
16	Screws	SM123
18	Elbow	PD55
19	Cover	CP115
21	Balls (glass beads)	BA23
22	Cell Block	AA-S1083
23	Screws	SM120
26	Armature	FB767
27	Spring	SL73
28	Solenoid Core	Part of Item 29
29	Solenoid	VD10
30	Bottom Nut	Part of Item 29
31	Cable Gland	GD34
32	Cable	WE2
33	Drain Tube	TF37
34	Elbow	PD55
36	Plug or Buffer Connector	PL45 or NC119

Fig. 5.5 Polarising Zero Analyser

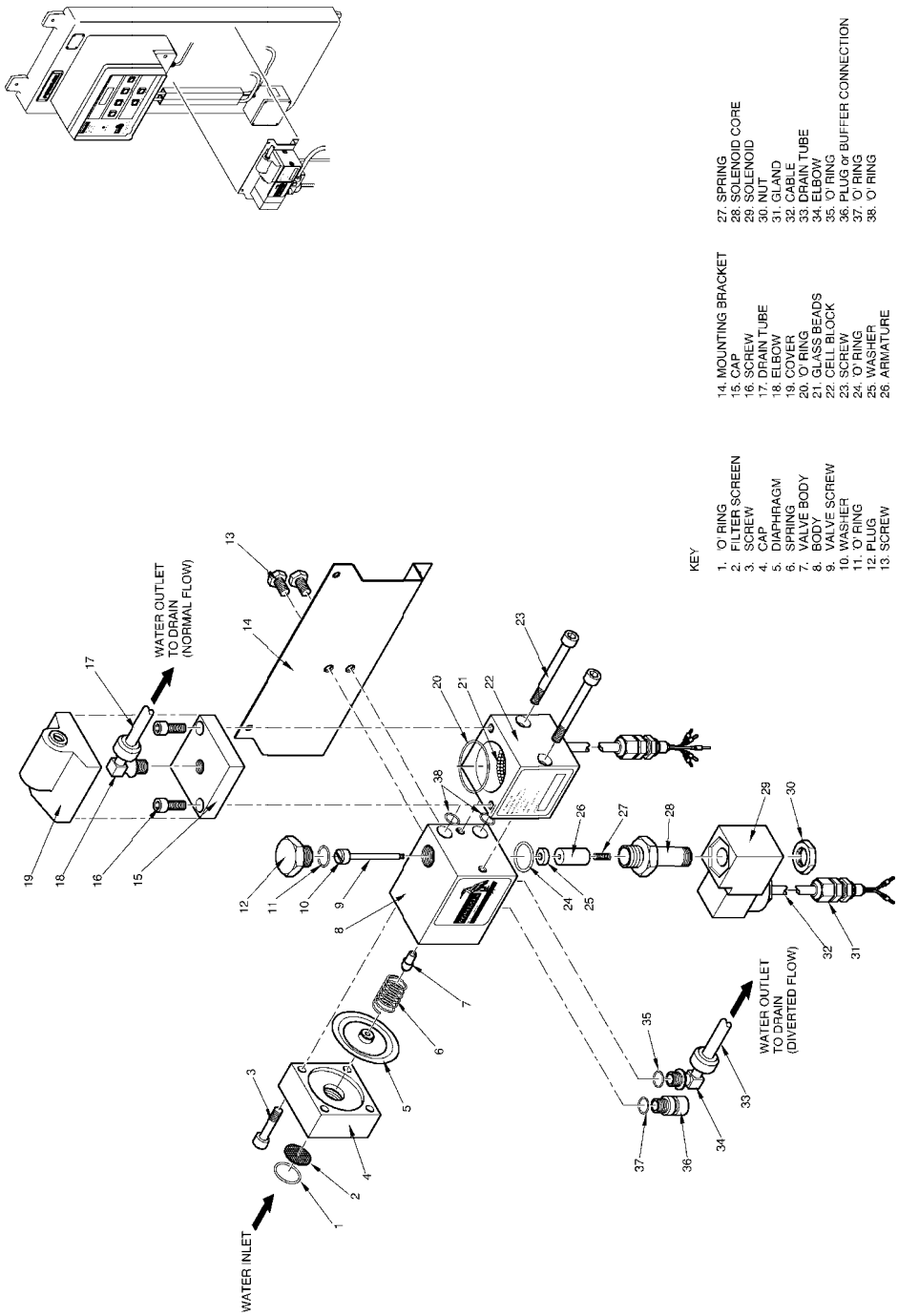

Chapter 6

Options

This Chapter contains additional information covering optional equipment purchased with the Medway 2 Analyser. All information in the following sections is unique to the options supplied information already given in Chapters 1 to 5 of this Operating and Maintenance Manual is not repeated in this chapter.

All Warnings given in this manual also apply to the optional equipment and must be observed when relevant. Any specific warnings are given in the section of this chapter appertaining to the option.

Option A

Buffer System

Contents

Para		Page
1.	**BUFFER SYSTEM**	**6A.3**
1.1	Detailed Description	6A.3
1.1.1	Buffer Container and Solution	6A.3
1.1.2	Buffer Low Level Switch	6A..5
2.	**INSTALLATION AND COMMISSIONING**	**6A.5**
2.1	Pump Assembly Mounting	6A.5
2.2	Pipework Connection	6A.6
2.3	Electrical Connection	6A.6
2.4	Commissioning and Operation	6A.6
3.	**MAINTENANCE**	**6A.7**
3.1	Buffer Solution Replenishment	6A.7
3.2	Low Level Switch Cleaning and Checking	6A.7
3.3	Changing the Peristaltic Tube	6A.8
4.	**FAULT FINDING**	**6A.9**
4.1	Low Buffer Level Error Message (FF 6)	6A.9
5.	**SPARES KITS**	**6A.10**

ILLUSTRATIONS

Fig No		Page
6A.1	Drilling Diagrams	6A.4
6A.2	Buffer System Parts Identification	6A.13
6A.3	Buffer System Wiring Connection Diagram	6A.15

TABLES

Table No		Page
6A.1	Buffer System, Main Parts	6A.10
6A.2	Buffer System, Spares	6A.11

1. BUFFER SYSTEM

1.1 Detailed Description (Figs 6A.1 and 6A.2)

The buffer system is a means of adding a controlled dose of a buffer solution into the sample water supply to the analyser. The purpose of the buffer solution is to reduce the acidity (pH) of the sample water to a level of 4 or 5 for greater accuracy in residual chlorine monitoring. The solution is injected directly into the Medway 2 analyser (of either type) through a port specific for the purpose.

The system comprises the following main parts: a peristaltic pump assembly an optional portable container for the buffer solution an optional low level switch for the buffer container and all necessary tubing and wiring. The solution is stored in the container on the floor near the pump. If a low level switch is fitted it will be wired into the residual monitor via connections in the dosing pump so as to give, and display, buffer low level as a system alarm.

The pump assembly consists of an electric motor, driving a rotor through a reduction gearbox, a drip indicator, terminal blocks, power indicator light, tubing and a housing with component mounting panel and a hinged front cover. The mounting panel has the rotor and drip indicator mounted to the front of it with the motor gearbox and a PCB to the rear. The terminal blocks are on the reverse of the PCB.

Pumping action is obtained as two of the rotor lobes, fitted with rollers, press in turn against the plastic tube. This action discharges the solution ahead of the roller and draws more solution in, this is trapped by the action of the second roller to repeat the process. The drip indicator is fitted on the suction side of the pump to give a visual means of checking flow from the buffer container. All tubing connections with the pump are push-fit to connector nipples. The discharge tube also has a cable tie for added support due to the higher pressure.

Electrical connections between the buffer pump and monitor are as shown in Figure 6.2.

1.1.1 Buffer Container and Solution

Safety Precautions

The buffer solution is a stable, colourless, non-toxic, non-flammable liquid. However, being acid it can be harmful if ingested in large quantities and it can irritate the eyes. Protective clothing, goggles, gloves and apron, must be worn when handling buffer solution.

WARNING!

Any container used to hold buffer solution must be labelled to inform of the chemical contents. No container is to be used without such a label.

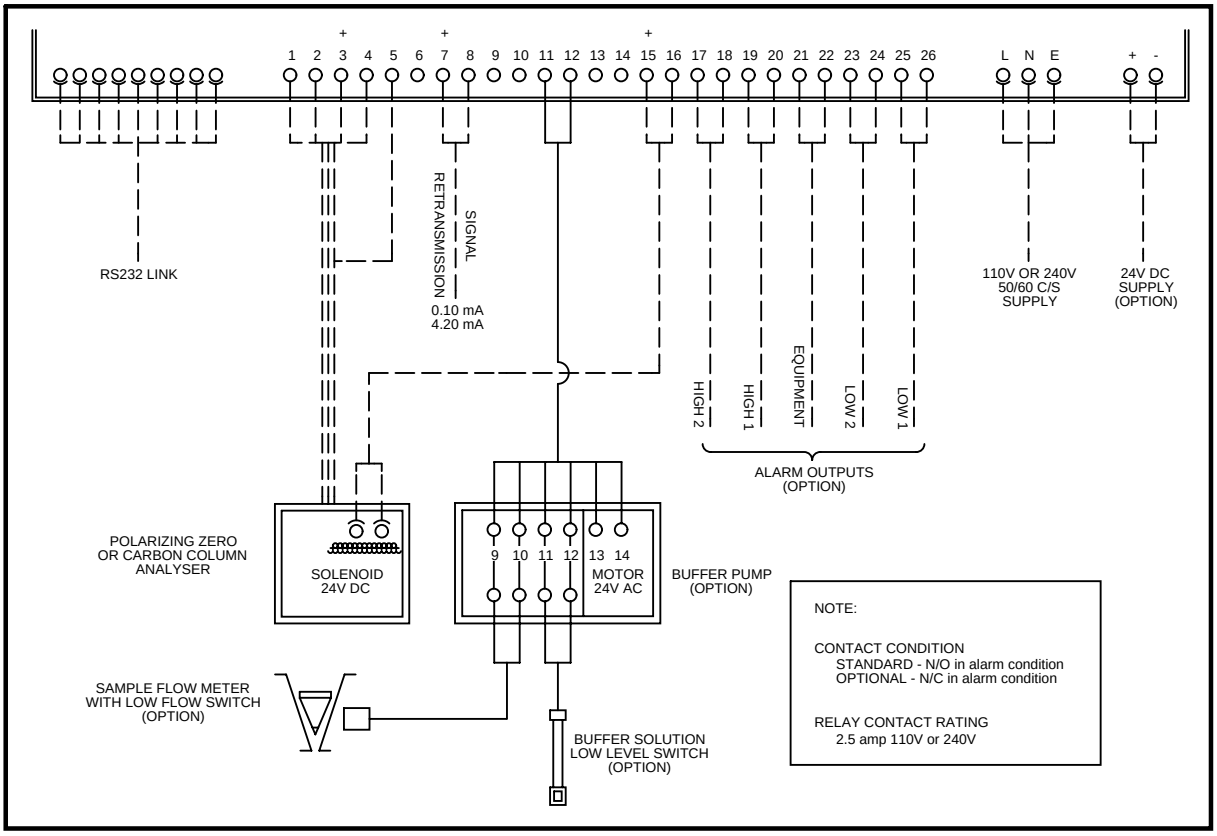

Fig. 6A.1 Drilling Diagrams

Medical Treatment

Eyes	Irrigate thoroughly with water. If discomfort persists obtain medical attention.
Lungs	Remove from exposure.
Skin	Wash thoroughly with soap and water.
Mouth	Rinse out the mouth thoroughly with water. In severe cases obtain medical attention.

Container Description

The optional Portacel buffer container and cap are made of high density polyethylene. The container is fitted with a suction tube, with a strainer, which passes through a hole in the cap and connects with the buffer pump.

1.1.2 Buffer Low Level Switch

The optional low level switch is a magnetic type switch mounted within a shroud on the end of a tube. Wires from the switch pass upward through the tube and connect to terminals on the PCB within the buffer pump enclosure.

The switch is activated by the magnetic float. It is open while the level remains above a predetermined level and close initiating a signal to the residual monitor which will give a low buffer level alarm.

2. INSTALLATION AND COMMISSIONING

2.1 Pump Assembly Mounting

The buffer pump assembly and the container need to be located near to the Medway 2 Analyser within the available lengths of the suction and delivery tubing.

The buffer pump enclosure can be either wall or panel mounted. The four hole centres for drilling and mounting should be 110mm horizontally, 90mm vertically and 4.2mm diameter.

Access to the enclosure mounting holes is obtained by releasing and opening the enclosure front cover. The cover screws are captive and cannot be fully removed. The mounting holes will be seen at each corner.

2.2 Pipework Connection

Connection of the pump delivery tube with the analyser is via a gland in the base of the analyser which replaces the standard plug. If the buffer pump was not supplied as original equipment this change will have to be made.

If the optional level switch is being fitted, pass the suction tube through the hole in the bung at the top of the container. Fit the strainer onto the tube then lower the switch and suction tube into the container and push the bung into the neck of the container. The bung replaces the standard cap which should be kept for future use. Ensure all tubing is free of tight bends that may restrict flow.

2.3 Electrical Connection (Fig 6A.2)

Run the cable, already connected to the pump assembly, through one of the left-hand 13mm diameter holes in the base of the residual monitor. The wires of the cable have numbered tags at their free ends which correspond with the terminal numbers in the monitor.

Should the optional buffer low level switch be fitted then this will require connection into the pump assembly terminal block. This is accessed on the rear of the PCB following release of the component mounting board.

The cable from the level switch should be passed through the base of the pump enclosure then the wires connected to the two terminals engraved LEVEL SW .

2.4 Commissioning and Operation

Once the buffer system is installed it becomes incorporated into the Medway 2 Monitoring System and controlled and monitored from the residual monitor. Commissioning of the buffer system is therefore integral with the commissioning of the Medway 2 system and reference should be made to Chapter 3 of the Operating and Maintenance Manual for adjustments in system set-up relevant to buffer system installation.

Similarly the operation is also controlled from the main system. Refer to Chapter 4. If the low level switch option is not fitted then a visual watch on the buffer solution level in the container will have to be made.

3. MAINTENANCE

The procedures given in this section are those needed to rectify faults diagnosed in the fault finding charts.

All electrical warnings and chemical precautions given in this section and in previous chapters must be adhered to.

3.1 Buffer Solution Replenishment

(1) Mix up the solution in accordance with the water hardness and the quantities given below.

Water Hardness $CaCo_3$	Quantity of Buffer Concentrate to 25 Litres of Water
PPM	Litres
50	0.25
100	0.5
200	1.0
300	1.5
400	2.0

(2) Release the cap or bung (as applicable) in the top of the container and move sufficiently to pour in the solution. The tubes, including the level switch if fitted, may be fully withdrawn from the container without detriment and with the monitor still operating. Avoid laying aside where the tubes may get dirty.

(3) Replace the tubes and secure the cap on completion.

(4) Wash out and clean the container used for mixing.

3.2 Low Level Switch Cleaning and Checking

(1) Remove the level switch complete with suction tube and strainer from the container.

(2) Wash the switch by holding under running water. Should it become necessary to dismantle the float assembly, removal of the retaining circlip will release the float from the switch rod. Record the orientation to ensure correct replacement later.

(3) Switch operation can be checked by detecting the current at the terminals in the monitor. Moving the float upward past the switching point should open the switch contacts and moving it downward should close them. Adjustment of the switching point is not possible and repair of the switch is by replacement only.

(4) On completion of cleaning and or testing reposition the switch, strainer and suction tube back in the container.

3.3 Changing the Peristaltic Tube

Changing the peristaltic pump tube is best achieved with the pump running and easing it out of position between the pump (rotor) lobes as they turn.

(1) Open the pump enclosure and remove the transparent cover from the pump block.

(2) Pull out the sliding retainer locating the suction and peristaltic tubes in the wall of the pump block.

(3) As the two lobes with the tube between rotate anti-clockwise, guide the tube round so that it comes away from the rotor.

(4) Pull out the sliding tube retainer on the delivery side of the pump.

(5) Disconnect the peristaltic tube from the drip indicator and from the delivery tube. Discard and replace with new tube complete with retainers.

(6) Locate the suction side tube retainer in the wall of the pump block.

(7) Catch a gap between the two lobes on the rotor and position the tube in place behind the first rotor. The second lobe should hold the tube in position as it rolls round over the tube.

(8) Slide the delivery end tube retainer into the wall of the pump block.

(9) Close and secure the front cover of the pump enclosure.

4. FAULT FINDING

4.1 Low Buffer Level Error Message (FF 6)

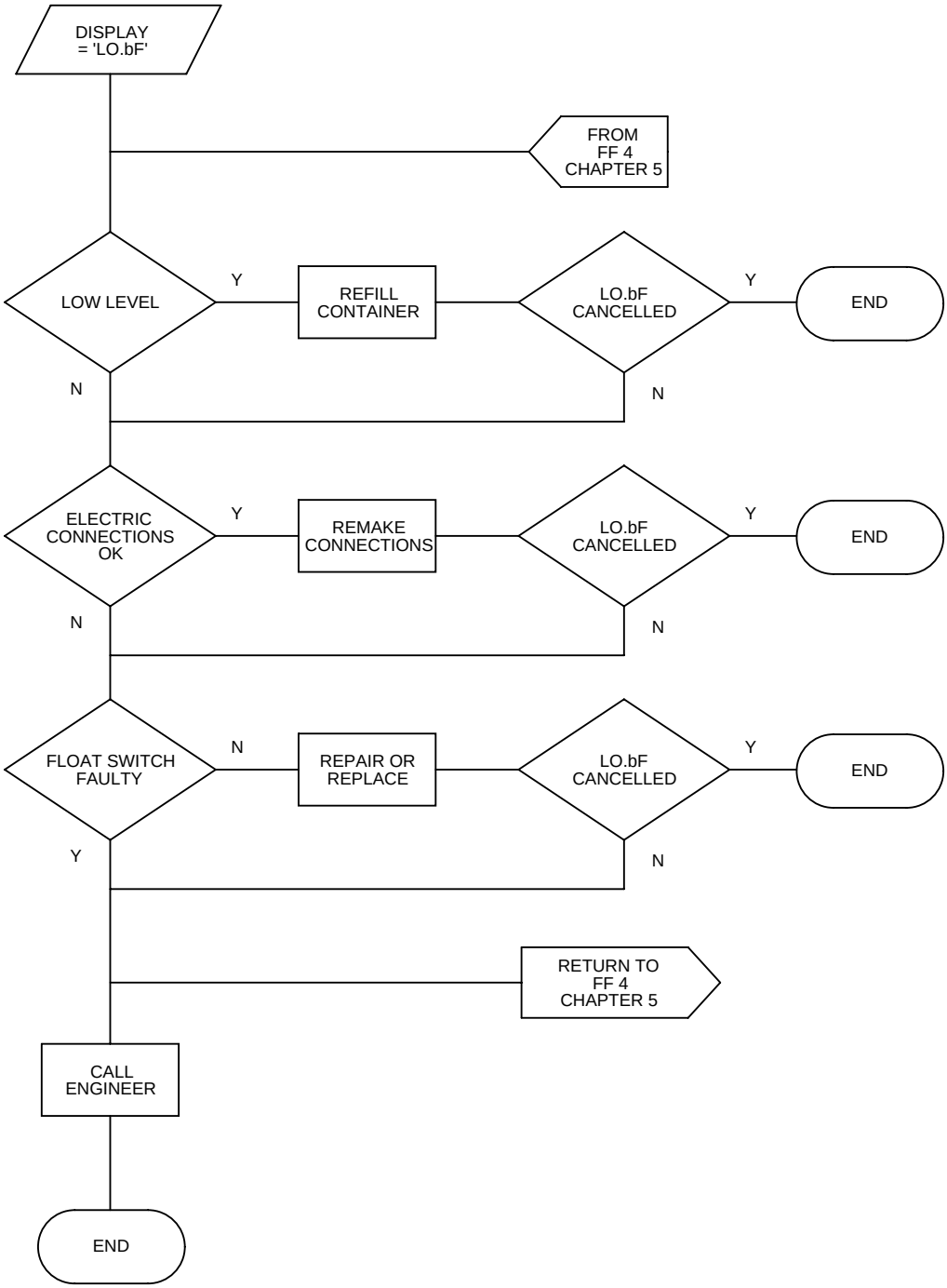

5. SPARES KITS

Table 6A.1 Buffer System, Main Parts (Fig. 6A.1)

Fig. Item Reference	Description	Part Number
1	Cable	WE15
2	Gland	GD34
3	Enclosure	CA131
4	Motor Gearbox	MB15
5	PCB	AA-S1080
6	Mounting Panel	PA112
7	Drip Indicator	AA-S1079
8	Tube, Suction 125mm	TF39
9	Tube, Suction 75mm	TF39
10	Tube, Delivery 500mm	TF39
12	Pump, Rotor	PU14
13	Light, Supply Indicator	
14 (not shown)	Strainer, Buffer Tank	AA-S136
15	Hinge	HB13
16	Washer	WB60
17	Screw	SM33
18	Washer	WB71
19	Screw	SM82
20	Nut	ND74
21	Screw	SM45
22	Spacer	SK116

Fig. Item Reference	Description	Part Number
23	Clip	CH47
24	Connector	CO51
25	Tube, Suction 1200mm	TF39

Table 6A.21 Buffer System, Spares

Fig. Item Reference	Description	Part Number
11	Tube, Peristaltic	TF47

Fig. 6A.2 Buffer System Parts Identification

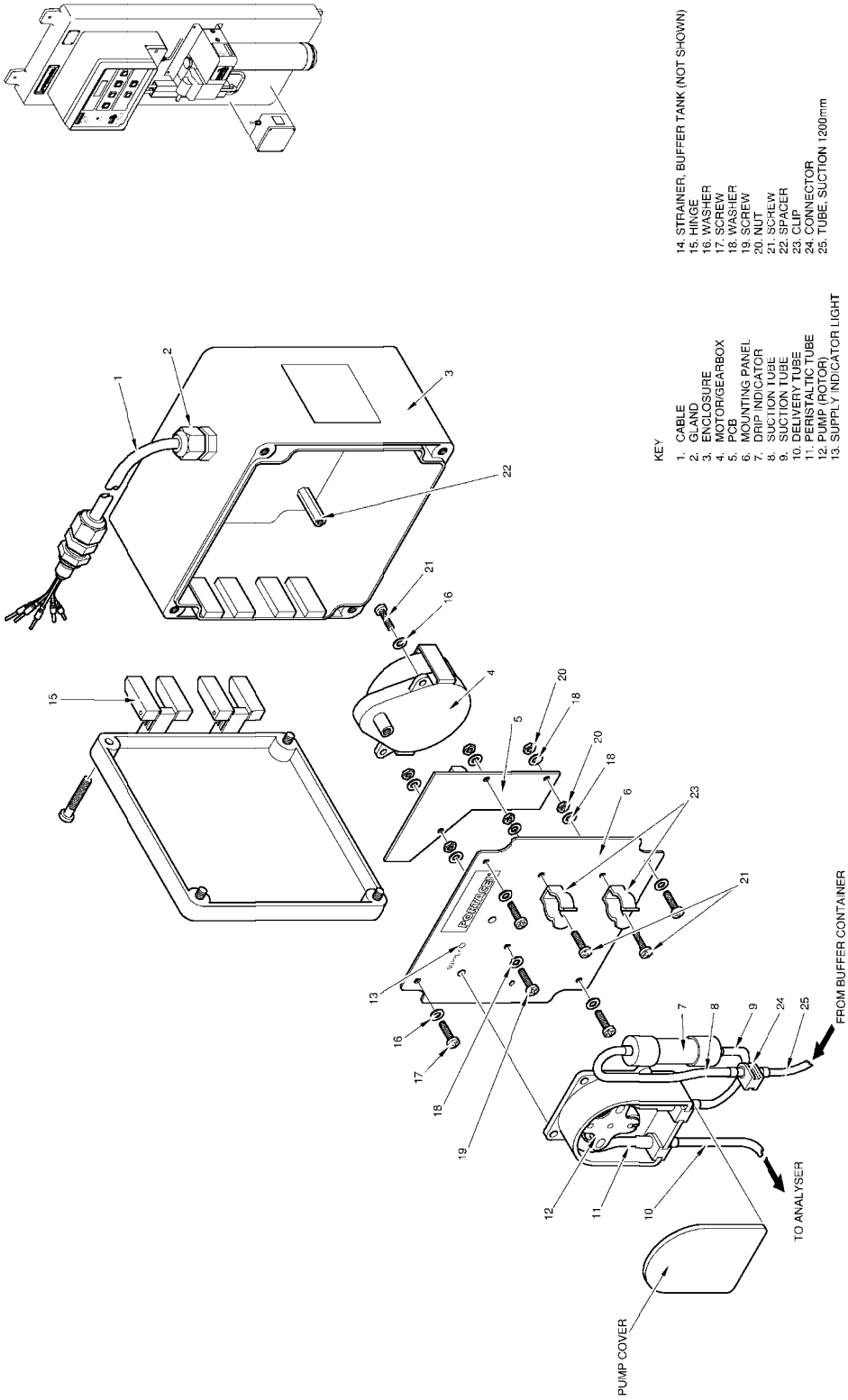

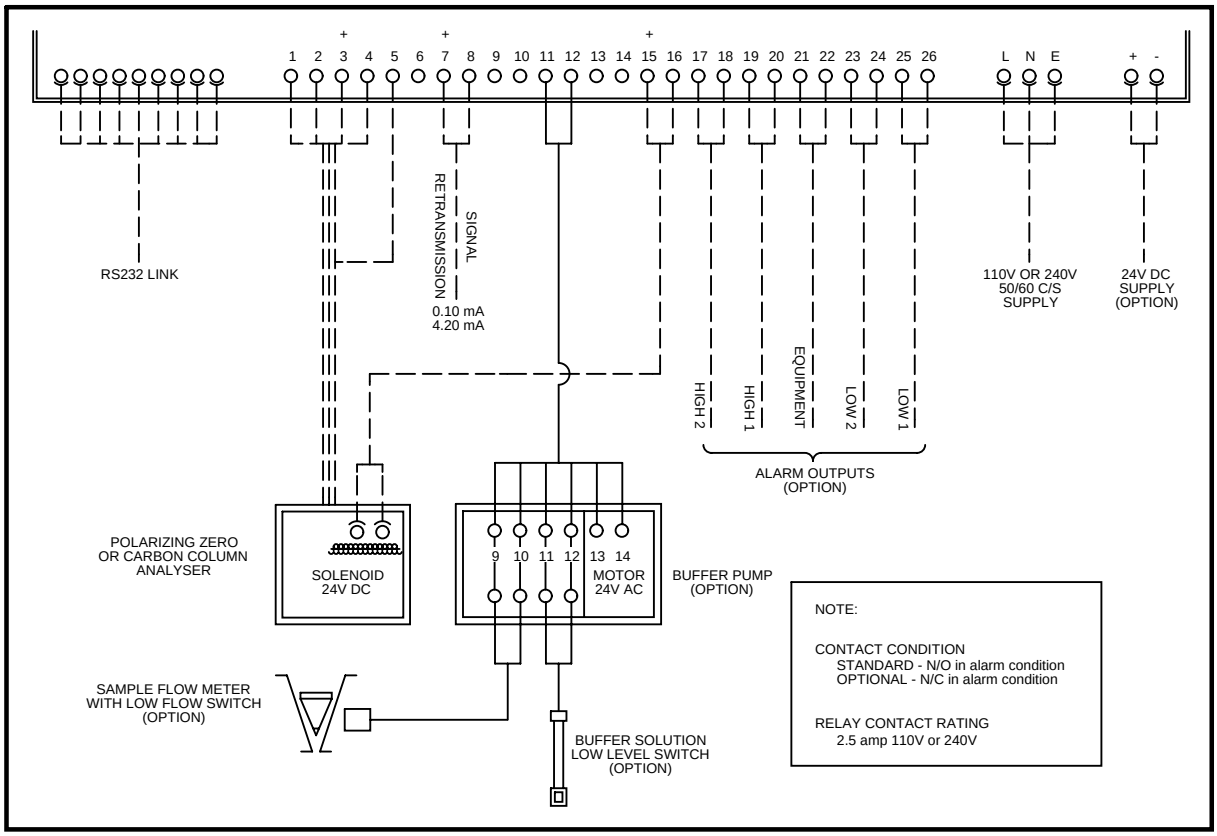

Fig. 6A.3 Buffer System Wiring Connection Diagram

Option B

Flow Meter And Low Flow Switch

Contents

Para		Page
1.	**FLOWMETER AND LOW FLOW SWITCH**	**6B.3**
1.1	Detailed Description	6B.3
2.	**INSTALLATION AND OPERATION**	**6B.3**
3.	**MAINTENANCE**	**6B.4**
3.1	Cleaning the Flowmeter	6B.4
3.2	Low Flow Switch Calibration	6B.5
4.	**FAULT FINDING**	**6B.6**
4.1	Low Flow Error Message (FF 7)	6B.6
5.	**SPARES KITS**	**6B.7**

ILLUSTRATIONS

Fig No		Page
6B.1	Flowmeter and Low Flow Switch	6B.8
6B.2	Low Flow Switch Wiring Connection Diagram	6B.9

TABLES

Table No		Page
6B.1	Flowmeter and Low Flow Switch, Main Spares	6B.7

1. FLOWMETER AND LOW FLOW SWITCH

1.1 Detailed Description (Fig 6B.1 and 6B.2)

The flowmeter and optional low flow switch are fitted in the sample water supply line between the water main and the analyser. The low flow switch is adjustable to give greater control over the alarm setting.

The flowmeter comprises a clear plastic meter tube and the flow switch, within a rectangular housing. The meter tube is calibrated for the flow duty of the installation. The flow is indicated against the calibration by the flat top face of a float within the tube that rises and falls according to the flow. The housing has a clear front cover through which the meter tube, float and switch can be seen.

The low flow switch is attached to a column, parallel to the meter tube, on which it can be adjusted up or down as required. The switch responds to the magnetic component of the float.

The switch is electrically connected either to the monitor or to the buffer pump, if one is fitted.

Pipe connections at the top and bottom of the flowmeter are inch BSP.

2. INSTALLATION AND OPERATION

The flowmeter should be integrated into the sample water supply line between the isolating valve and the analyser in a vertical position. On the rear of the flowmeter are two M5 studs for use in surface mounting.

Electrical connection should be to the buffer pump, if one is fitted, otherwise to the residual monitor.

The flowmeter operates in that the upward flow of the water maintains the float buoyant in the tube, the float s level being proportional to the rate of flow. With a low flow switch fitted, normal flow will maintain the float above the switch position. A reduction in flow will cause the float to fall below switch level initiating a low flow alarm at the residual monitor.

3. MAINTENANCE

The procedures given here are those needed to rectify faults diagnosed in the fault finding charts.

3.1 Cleaning the Flowmeter

Due to the normal drinking water quality of the sample water it is not anticipated that the meter tube will need cleaning. Neither is it anticipated that the float will stick in the tube, although there is a possibility if the water has been drained down and in so doing has drawn the point of the float firmly into the bottom of the tube.

(1) If the float has stuck and not been released by re-commencement of water flow then before dismantling, invert the flowmeter and give a gentle tap to release the float. If unsuccessful or cleaning is required proceed with the following steps.

(2) If intended to carry out cleaning away from the mounting position, isolate the electrical supply and disconnect the flow switch wiring then release the flowmeter from the wall or panel.

(3) Unscrew the housing cover. Remove the clip from around the top of the meter tube securing it to the top block spigot.

(4) Slide the tube upwards off the bottom connection then lift it outwards clear of the bottom connection and finally slide it downwards off the top connection. Recover the float from within the tube.

(5) Wash the tube, float and clip in warm soapy water and dry thoroughly.

(6) Inspect the O rings in the top and bottom connection blocks and renew if necessary.

(7) Place the float back in the meter tube, ensuring the tube scale is the correct way up and that the point of the float is downward.

(8) Ease the meter tube up onto the top connector over the O ring then ease it down onto the bottom connector over the O ring.

(9) Check the scale inscriptions are to the front and that the float is sitting correctly.

(10) Replace and secure the transparent front cover.

(11) Replace the flowmeter back on to the wall or panel and reconnect the pipework and wiring of the flow switch.

3.2 Low Flow Switch Calibration

(1) Isolate the electrical supply and disconnect the switch wiring at the buffer pump.

(2) Shut off the sample water flow to the flowmeter.

(3) Disconnect the top and bottom water connections to the flowmeter.

(4) Remove the flowmeter from the wall or panel and lay it down horizontally.

(5) Remove the housing front cover to gain access to the switch.

(6) Tilt and tap the flowmeter as needed to line up the flat top of the float with the flow rate required to indicate a low flow alarm.

(7) Loosen the screw holding the switch box and slide the box to the bottom of the column.

(8) Connect a current detecting device to the switch terminals. An open circuit should be registered in this position.

(9) Carefully slide the switch box up the column until the circuit reads closed. This is the position at which the switch will respond to the float in operation.

(10) Verify the setting by moving the float to the top of the column. The circuit should open. Move the float slowly downward. The circuit should close at the desired low flow rate position. If not, repeat steps (6) to (10).

(11) When complete, replace the front cover, re-secure the flowmeter to the wall or panel, attach the water pipework and reconnect the wiring. Restore the electrical and water supplies.

4. FAULT FINDING

4.1 Low Flow Error Message (FF 7)

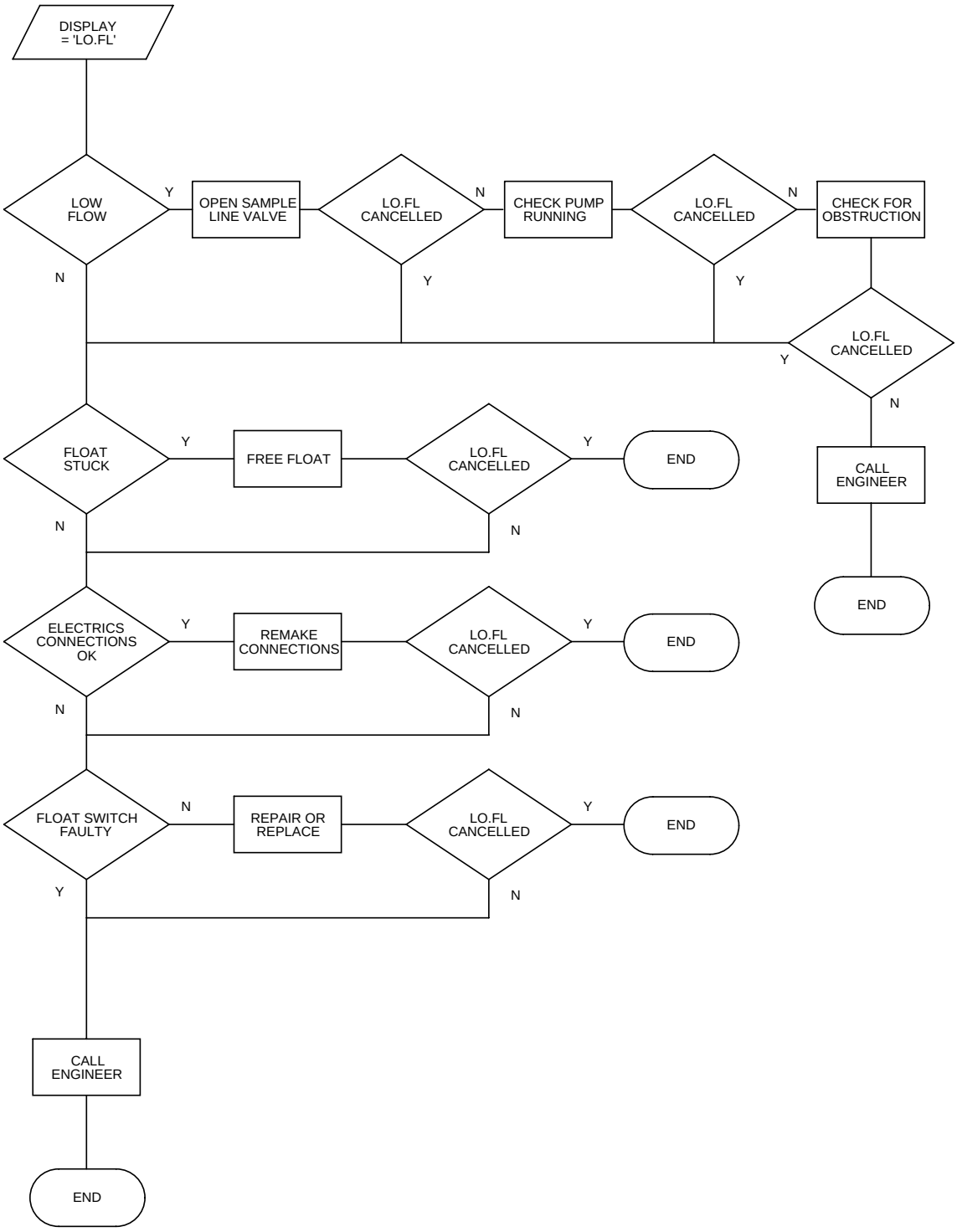

5. SPARES KITS

Table 6B.1 Flowmeter and Low Flow Switch, Main Spares (Fig 6B.1)

Fig. Item Reference	Description	Part Number
1	Meter Tube and Float	TK176

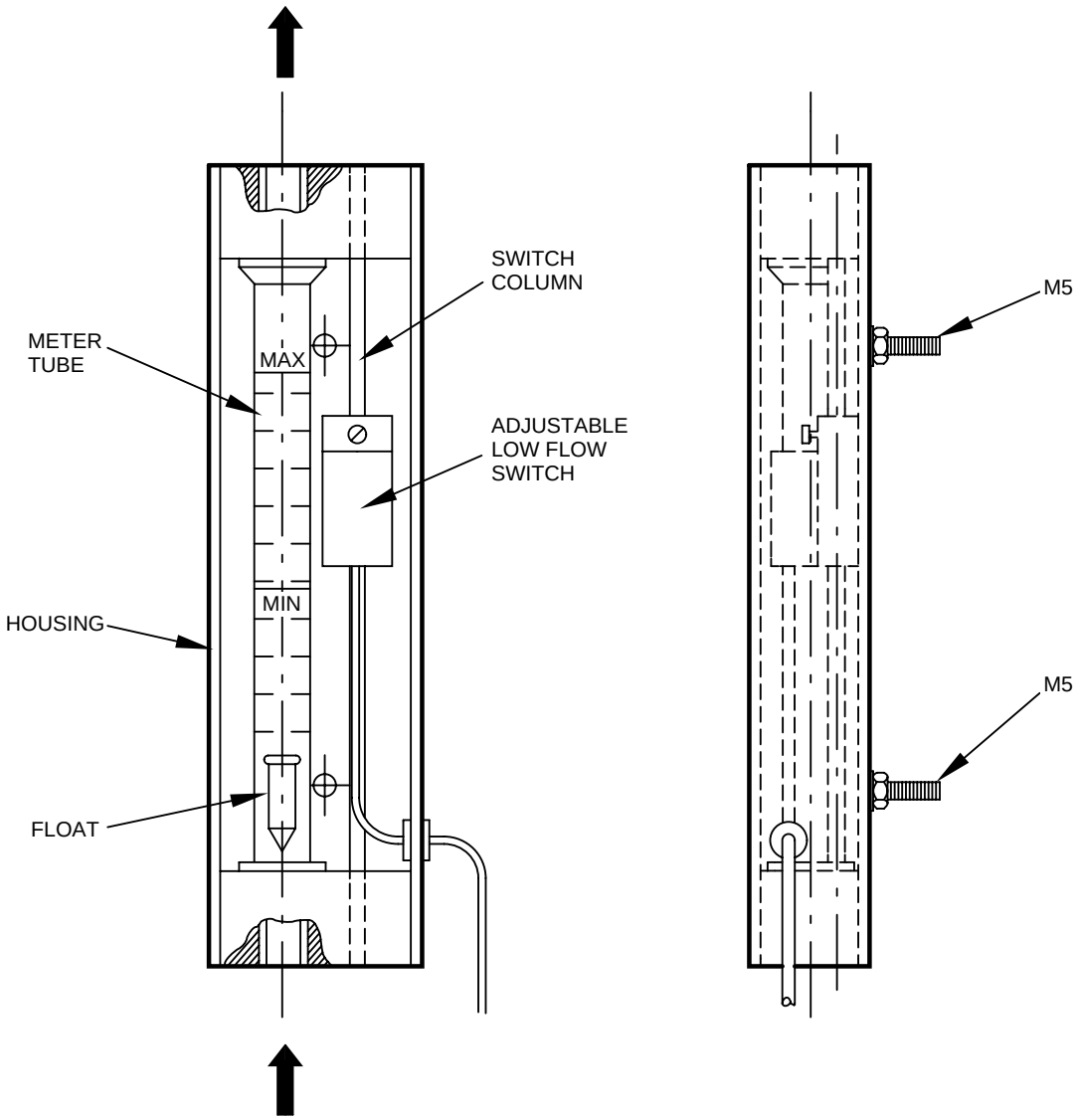

Fig. 6B.1 Flowmeter and Low Flow Switch

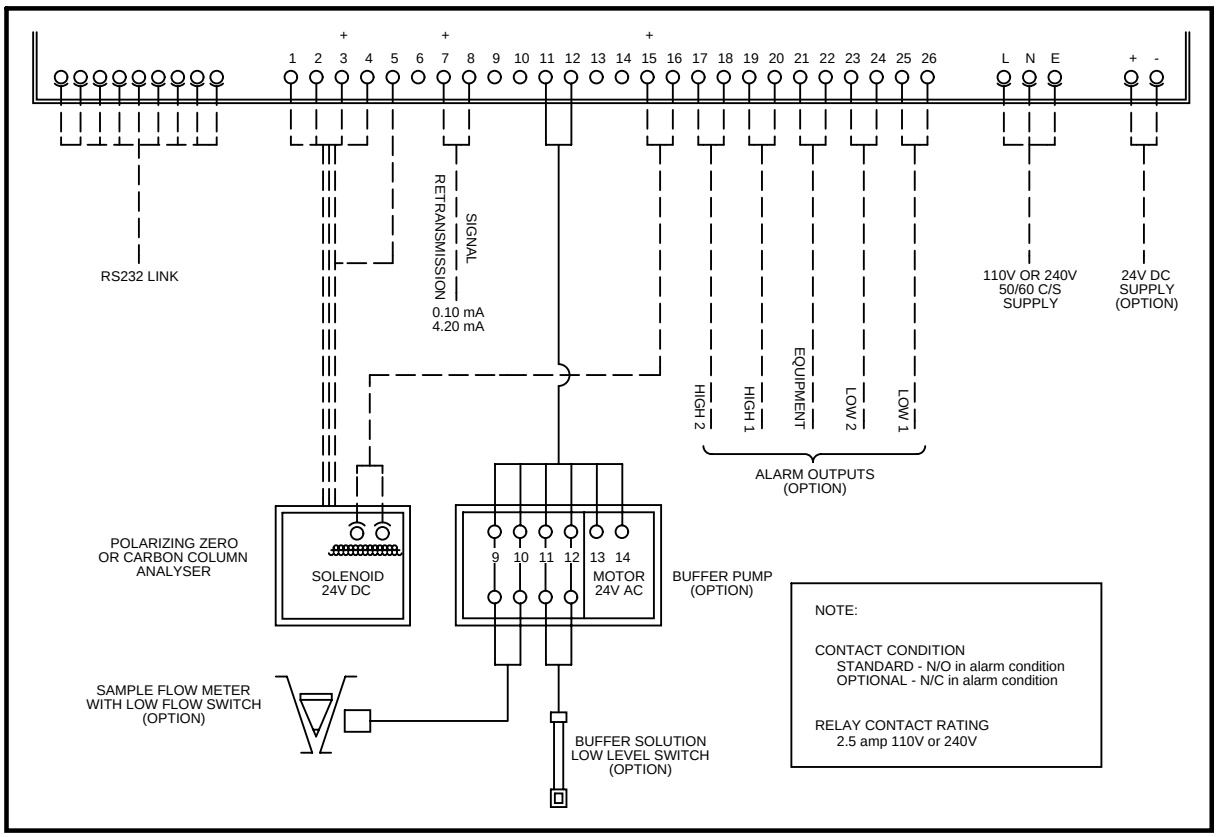

Fig. 6B.2 Low Flow Switch Wiring Connection Diagram

THAMES 12
DOSING UNIT

OPERATING AND MAINTENANCE MANUAL

Part No 41311

Issue 2
May 2001

Portacel
Winnall Valley Road,
Winchester,
Hampshire, SO23 0LD,
United Kingdom.

Tel: 44 (0) 1962 826300
Fax: 44 (0) 1962 866084

Web: www.portacel.com

CONTENTS

Amendment Record

Introduction

Safety

Chapter 1: General Description

Introduction
1. Leading Particulars
2. Purpose
3. Principle of Operation
4. System Overview

Chapter 2: Technical Description

Introduction
1. General
2. Principal Components
3. System Integration

Chapter 3: Installation and Commissioning

Introduction
1. General
2. Installing the Thames 12 Dosing Unit(s)
3. Commissioning

Chapter 4: Operating Instructions

Introduction
1. General
2. Start Up
3. Operation
4. Shutdown

Chapter 5: Maintenance

Introduction
1. General
2. Removal and Replacement
3. Fault Finding
4. Service of Manual Chlorinator & Sulphonator
5. Service of Automatic Chlorinator & Sulphonator
6. Service of Manual Ammoniator
7. Spare Parts

Chapter 6: Options

Introduction
1. General
2. Option 1: Automatic Valve Positioner (AVP)
3. Option 2: Flow Proportional Controller (FPC)

AMENDMENT RECORD

Amendment No	Date	Signature

INTRODUCTION

This manual contains the information on the Thames 12 Dosing Unit, its Operation and Maintenance. The manual refers to the Thames 12 Dosing Unit and its operation in the Manual mode it does not include all available options. Chapter 6 reflects the delivered Automatic options.

The Thames 12 Dosing Unit doses a disinfecting gas into a water supply from 25g to 12kg hr of chlorine or sulphur dioxide and 12 g to 6 kg hr of ammonia.

The unit can be either wall or floor mounted and is compact and easily maintained. Control of the unit can be either Manual or Automatic via an automatic valve positioner (AVP) or flow proportional controller (FPC).

For capacities of 15 Kg to 60 kg hr refer to Thames 60 Operating and Maintenance Manual (Part No 41312).

For capacities of 60kg to 250kg hr refer to Thames 250 Operating and Maintenance Manual (Part No 41323).

For detailed information on the AVP refer to Operating and Maintenance Manual (Part No 41313).

For detailed information on the FPC refer to Operating and Maintenance Manual (Part No 41314).

COPYRIGHT

© Portacel Disinfection Systems 1999

All rights reserved. No part of this publication may be reproduced, stored in a retrieval system, or transmitted in any form or by any means, electronic, mechanical, photocopying, recording or otherwise, without the prior permission of Portacel Disinfection Systems.

SAFETY OF PERSONNEL

WORKING ENVIRONMENT

Purpose

The Portacel Thames 12 Dosing Unit is designed to operate with commercially produced gas. The necessary precautions relating to the gas must be undertaken at all times. For these precautions refer to the manufacturers or suppliers data sheets.

PORTACEL decline responsibility if an attempt is made to use the equipment for any purpose other than for which it was designed.

Environment

The Portacel Thames 12 Dosing Unit is installed into a system using gases supplied by third parties. The equipment must be operated in accordance with the gas suppliers information and instructions and in accordance with site instructions including:

(a) All pipework must be installed to ensure it is maintained at an ambient temperature ie. no cold spots.
(b) Temperature range.
(c) Humidity.
(d) Vibration.
(e) Electrostatic discharge.

Pneumatic Power

The level of vacuum supplied by the Ejector to operate the regulator is a minimum of 122 mm of mercury (65 water gauge).

Personnel

▲	**WARNING!** **If incorrectly used this equipment can cause severe injury. Those who use and maintain the equipment should be trained in its proper use, and should have read and understood the Safety Instructions contained in this manual before attempting to set up, operate, adjust or service the equipment.**
▲	**WARNING!** **The gas used can cause serious injury. For the safety precautions required refer to the manufacturers' data sheets and the site operating instructions. Where not available seek advice from the gas supplier.**

SAFETY ALERTS

SYMBOLS AND DECALS

Personnel must be familiar with all the warning symbols and decals fitted to the equipment. Failure to recognise a warning and read the associated safety instructions may result in injury or death.

The following symbols and decals are used on the equipment:

This decal is used to indicate an electrical hazard. The equipment must be disconnected from main electrical power supply when this decal is encountered during installation, maintenance or setting-up.

REPLACE DAMAGED DECALS IMMEDIATELY

WARNINGS, CAUTIONS AND NOTES

Throughout this manual attention is drawn to specific points as follows:

WARNING!

A warning alerts the reader to the potential hazards. Failure to read and obey the safety instructions may result in serious injury to, or death of, personnel and damage to equipment.

CAUTION!

A caution alerts the reader to recommendations or instructions, non-observance of which could cause damage to equipment.

NOTE:

A note provides additional information that should be given special attention.

OPERATIONAL SAFETY

Operation

Do not start the equipment if the unit is not fully assembled.

Specific warnings are included throughout this manual in the relevant procedures. As a general warning the following areas of the equipment present a particular danger during setting-up and operation:

(a) Areas in direct contact with dosing gas.

ELECTRICAL HAZARD

WARNING!

The equipment must be disconnected form the main electrical power supply during installation or maintenance.

The equipment operates from a 100 to 240V AC main electrical supply or 24V DC. Specific warnings are included throughout this manual in the relevant procedures. As a general warning the following precautions must always be applied.

Only qualified personnel should carry out work on the equipment and the external alarm circuits.

ELECTRO-STATIC DISCHARGE (ESD) PRECAUTIONS

Precautions against ESD must be taken to prevent damage to the devices fitted to electronic circuits. When handling of the electronic circuits is required observe the following:

(a) Do not touch electronic circuits whilst unpacking.
(b) Always use a grounded wrist strap whilst handling electronic circuits.
(c) Ensure that the equipment is grounded when using the wrist strap.

Chapter 1

General Description

Contents

Para.		Page
	INTRODUCTION	**1.3**
1.	**LEADING PARTICULARS**	**1.5**
1.1	Dimensions	1.5
1.2	Weight	1.5
1.3	Connections and Operating Environment	1.5
1.4	Delivery Capacities and Accuracy	1.5
1.5	Displays and Indicators	1.6
2.	**PURPOSE**	**1.7**
3.	**PRINCIPLE OF OPERATION**	**1.7**
4.	**SYSTEM OVERVIEW**	**1.10**
4.1	General Information	1.10
4.2	Safety	1.10
4.3	Chlorine System	1.11
4.4	Sulphur Dioxide System	1.11
4.5	Ammonia System	1.11

ILLUSTRATIONS

Fig. No.		Page
1-1	Manual Thames 12 Dosing Unit (wall unit, small panel)	1.8
1-2	Thames 12 Dosing Unit Basic System Configuration	1.9

TABLES

Table No.		Page
1-1	Meter Tube Sizes and Operation	1.6

INTRODUCTION

This Chapter covers the principal particulars of the Thames 12 Dosing Unit and includes the purpose and principle of operation of the unit together with an overview of a typical installation in which it may be fitted and operated.

1. LEADING PARTICULARS

This is a list of the dimensions, weight, input and output requirements of the unit.

1.1 Dimensions

Height ..... 840 mm
Width ..... 300 mm
Depth ..... 203 mm

1.2 Weight

Complete Unit ..... 11.5 Kg

1.3 Connections and Operating Environment

Operating Range (°C) ..... 5 - 45 °C
Connections (nominal bore)..... uPVC
Vacuum .....122 mm of mercury (65 water gauge) minimum

1.4 Delivery Capacities and Accuracy

Chlorinator ..... 50 g to 12 Kg h
Sulphonator ..... 50 g to 12 Kg h
Ammoniator ..... 25 g to 6 Kg h
Accuracy ..... 4 of indicated flow

1.5 Displays and Indicators

Vacuum Gauge ..... 1 - 0 Bar
Meter Tube..... Length 150 mm.

The meter tubes differ in bore diameter depending on the capacity of delivery required. The tubes are calibrated in:

(a) Grams per hour for gas delivery up to 1Kg h.

(b) Kilograms per hour for gas delivery over 1Kg h.

Table 1.1 shows the delivery capacity, tube length and the gas each tube can be used for.

Capacity g/h	Tube Length (mm)	Tube used for:		
		Chlorine	Sulphur	Ammonia
25	150	N A	N A	✔
50	150	✔	✔	✔
100	150	✔	✔	✔
250	150	✔	✔	✔
500	150	✔	✔	✔
1000	150	✔	✔	✔
1500	150	✔	✔	✔
2000	150	✔	✔	✔
5000	150	✔	✔	✔
7000	150	✔	✔	N A
10000	150	✔	✔	N A
12000	150	✔	✔	N A

Table 1-1 Meter Tube Sizes and Operation

2. PURPOSE

The Thames 12 Dosing Unit (Fig.1-1) is designed to control the gas flow rate into the treated water main.

The unit controls the gas leaving the gas storage cylinders via vacuum regulators. Before the vacuum regulators the gas is supplied at relatively high pressure. After the vacuum regulators the Thames 12 Dosing Unit draws gas through a vacuum system and regulates the rate at which the gas is supplied into the water main via an ejector to treat the water.

3. PRINCIPLE OF OPERATION (Fig. 1-2)

The Thames 12 Dosing Unit is designed to control and meter a supply of gas, under vacuum conditions, from a pressurised gas supply into a water main. A vacuum must exist to enable the gas to be supplied to the Thames 12 Dosing Unit, if the vacuum fails the gas supply is shut off.

The vacuum is produced by passing water through an ejector that produces a vacuum by the venturi effect. In some cases the water is pumped past the ejector to ensure that sufficient vacuum is produced to open the vacuum valve which then supplies gas to the Thames 12 Dosing Unit via the vacuum pipe.

The supply of the toxic gas by vacuum instead of pressure is a safety measure ensuring that if there is a leak in the supply pipe after the vacuum regulator, air is drawn into the vacuum supply line instead of gas leaking out as would happen in a pressurised supply. To further reduce the risk the vacuum regulator is fitted as close as possible to the gas source to reduce the length of pressurised pipe that has to be used.

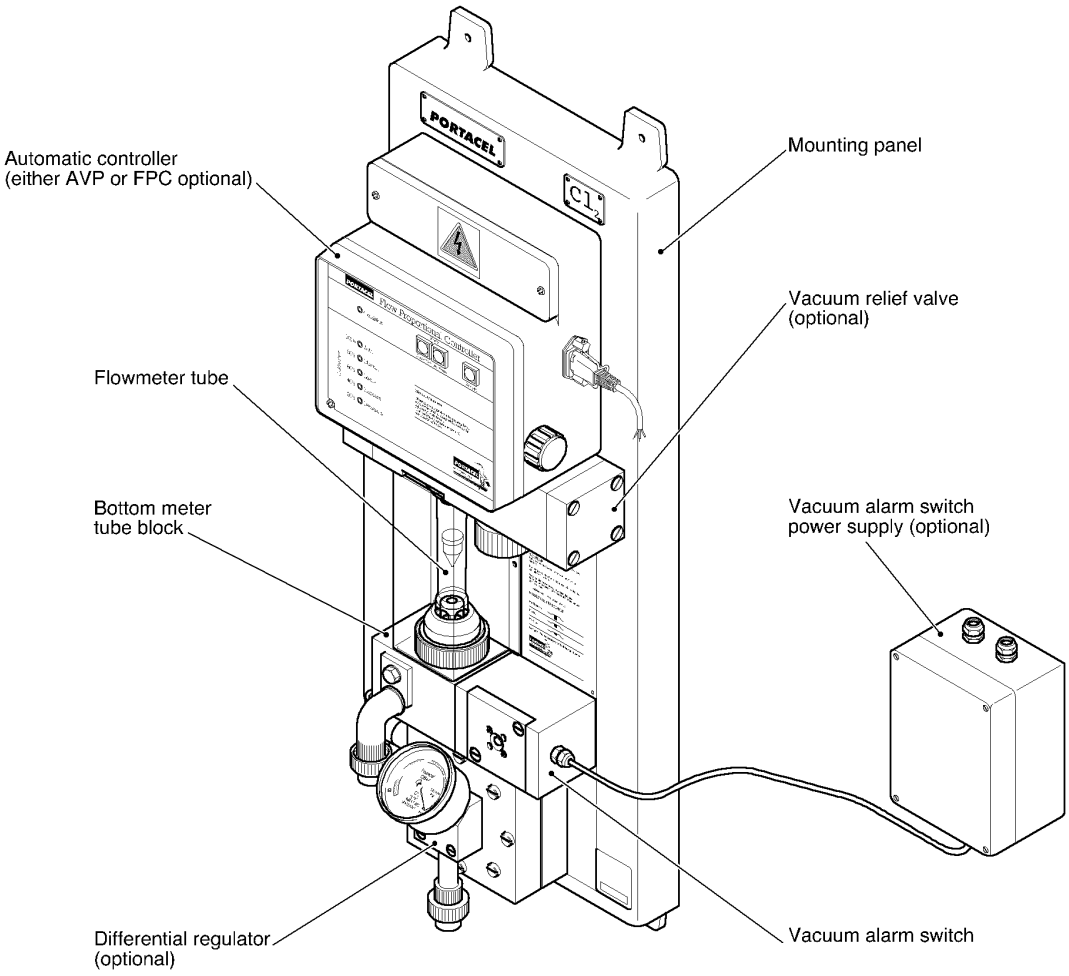

Fig. 1-1 Manual Thames 12 Dosing Unit (wall unit, small panel)

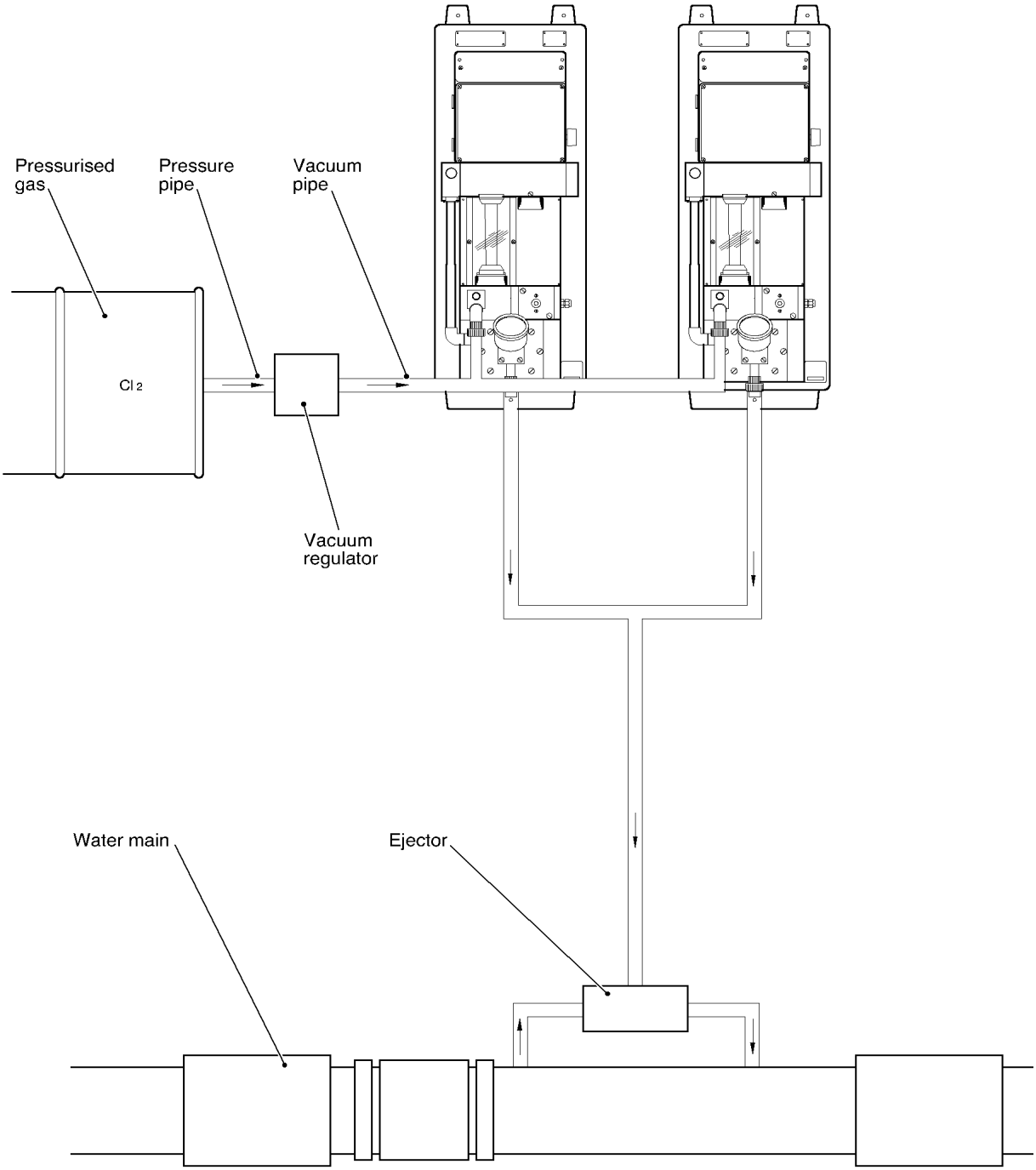

Fig. 1-2 Thames 12 Dosing Unit Basic System Configuration

4. SYSTEM OVERVIEW

The Thames 12 Dosing Unit operates in a system that is designed to ensure that the gas does not liquify but remains in the less corrosive gas state. The gas is supplied from the vacuum regulator to the Thames 12 Dosing Unit. A control valve is operated manually to adjust the dosing rate in response to either an increase or a reduction in water flow or an improvement or deterioration in the water quality. For other water treatment systems the manual control is replaced with the automatic valve positioner (AVP) unit. If this unit is fitted details can be found in the Options Chapter.

The Thames 12 Dosing Unit controls the amount of gas, as set by the operator, and supplies it to the water supply via the ejector. A differential regulator ensures a constant pressure drop is maintained across the control valve, this makes sure that changes of water pressure will not change the set dosing rate.

4.1 General Information

The Thames 12 Dosing Unit can be used to control and meter chlorine, sulphur dioxide and ammonia in gas form.

The supply and metering of each of the gases is identical. Each gas is supplied separately (none of the gases mix until applied in correctly metered quantities to the water).

4.2 Safety

The supply of each gas through its own vacuum pipes means that if a pipe were to leak (after the vacuum regulator), air would be drawn into the system, instead of gas being forced out of the pipe. In the case of a large leak the vacuum level would drop below the level required to operate the vacuum valve and the supply of gas would be stopped at the valve.

When vacuum levels move out of tolerance (low or high) a vacuum switch in the Thames 12 Dosing Unit will operate a switch which can be used to activate customer alarms to notify the operator.

Because chlorine and ammonia become explosive if mixed, the two chemicals are kept in separate storage facilities. All storage facilities should have recommended sensor equipment to detect leaks of gas. When leaks are detected, alarms and safety shut-down systems must be operated. For all details of the alarms and procedures refer to the individual site operating instructions.

4.3 Chlorine System

Chlorine is supplied from the gas supply bottles under pressure to the vacuum regulator. Prior to entry into the regulator, heat is applied to the gas to prevent condensing vapour entering the system. The supply of gas from the regulator depends upon there being a vacuum strong enough to open the vacuum valve and if the vacuum fails at any time the valve will close shutting off the gas supply.

The operating vacuum is supplied by venturi action from the ejector to the vacuum regulator via the Thames 12 Dosing Unit. The chlorine gas is supplied through a plastic vacuum pipe to the Thames 12 Dosing Unit where the flow is adjusted, either manually or automatically, using an automatic valve positioner (AVP) or flow proportional controller (FPC), to the required level. The required amount of gas is supplied to the ejector unit and then to the water to be mixed in the contact tank.

A sample of water in the contact tank is analysed to check the level of dosing being applied. The result of the analysis is used to correct the dosing level of the chlorine if required. The correction is carried out automatically but should be checked at regular intervals by the operator.

4.4 Sulphur Dioxide System

The supply, metering and dosing of sulphur dioxide gas is carried out in the same way as chlorine.

After the contact tank the water is analysed if the chlorine level is too high sulphur dioxide is added at the level set by the operator to correct the level of chlorine.

4.5 Ammonia System

The supply, metering and dosing of ammonia is carried out in the same way as chlorine. Ammonia and chlorine become explosive if mixed. The two Chemicals are kept in separate rooms to ensure that they do not mix.

After the granular actuated carbon (GAC) tank, the water is analysed and ammonia added, if required, at the level set by the operator.

Chapter 2

Technical Description

Contents

Para.		Page
	INTRODUCTION	**2.3**
1.	**GENERAL**	**2.5**
2.	**PRINCIPAL COMPONENTS**	**2.5**
2.1	Flowmeter Tube	2.5
2.2	Bottom Meter Tube Block	2.5
2.3	Gas Control Valve	2.9
2.4	Vacuum Relief Valve (Optional)	2.9
2.5	Differential Regulator (Optional)	2.9
2.6	Vacuum Gauge	2.15
2.7	Vacuum Alarm Switch (Optional)	2.15
2.8	Mounting Panel	2.15
3.	**SYSTEM INTEGRATION**	**2.19**
3.1	Dosing Gas Supply	2.19
3.2	Vacuum Regulator	2.19
3.3	Piping	2.19
3.4	Alarms	2.19

ILLUSTRATIONS

Fig. No.		Page
2-1	Thames 12 Dosing Unit Principal Components	2.6
2-2	Typical Arrangement of Flowmeter Tube	2.7
2-3	Bottom Meter Tube Block Assembly	2.8
2-4	Gas Control and Vacuum Relief Valve	2.11
2-5	Differential Regulator	2.13
2-6	Vacuum Alarm Switch	2.17
2-7	Dosing System	2.20

INTRODUCTION

This Chapter gives a technical description of the principal components of the Manually Operated Thames 12 Dosing Unit and the operation of those components. Optional items of equipment for the Automatic variants are detailed in Chapter 6.

1. GENERAL

The Thames 12 Dosing Unit (Fig. 2-1) is supplied either as a manually or automatically controlled dosing unit, the rate of flow being read directly from the flowmeter tube. The unit is operated by the manual control knob at the bottom of the valve block, this being either manually or automatically controlled. Turning it counter-clockwise (looking from underneath) opens the valve and clockwise shuts the valve. The dosing unit normally comprises the following:

(a) Flowmeter Tube.
(b) Bottom Meter Tube Block.
(c) Gas Control Valve.
(d) Vacuum Relief Valve. (Optional)
(e) Differential Regulator. (Optional)
(f) Vacuum Gauge. (Optional)
(g) Vacuum Alarm Switch. (Optional)
(h) Mounting Panel.
(i) Controller. (Both optional, either Automatic Valve Positioner (AVP) or Flow Proportional Controller (FPC)).

2. PRINCIPAL COMPONENTS

2.1 Flowmeter Tube

The flowmeter tube (Fig. 2-2) indicates the rate of flow of gas from the gas cylinder through the dosing unit to the ejector and then dosed into the water main. The meter tubes vary in diameter (refer to Chapter 1 - Leading Particulars) to suit the capacities of the units to which they are fitted, each tube is made of borosilicate glass.

A rotating ball or flat-topped float suspended in an upward flow of gas shows the flow rate reading against the graduation marks on the tube. For a ball, the reading should be taken at the horizontal axis and for a float, the reading adjacent to the flat top should be taken.

2.2 Bottom Meter Tube Block

The bottom meter tube block (Fig. 2-3) supports the flowmeter tube. The tube is held in place by the knurled ring at the base of the tube which, when turned, creates a clamping action to hold the tube against the control valve block at the top end of the tube. The tube is then held securely against sealing O rings at each end. The meter tube can be withdrawn from the unit by releasing the knurled ring. Gas from the vacuum regulator enters the dosing unit at the bottom meter tube block through tubing and a union connection.

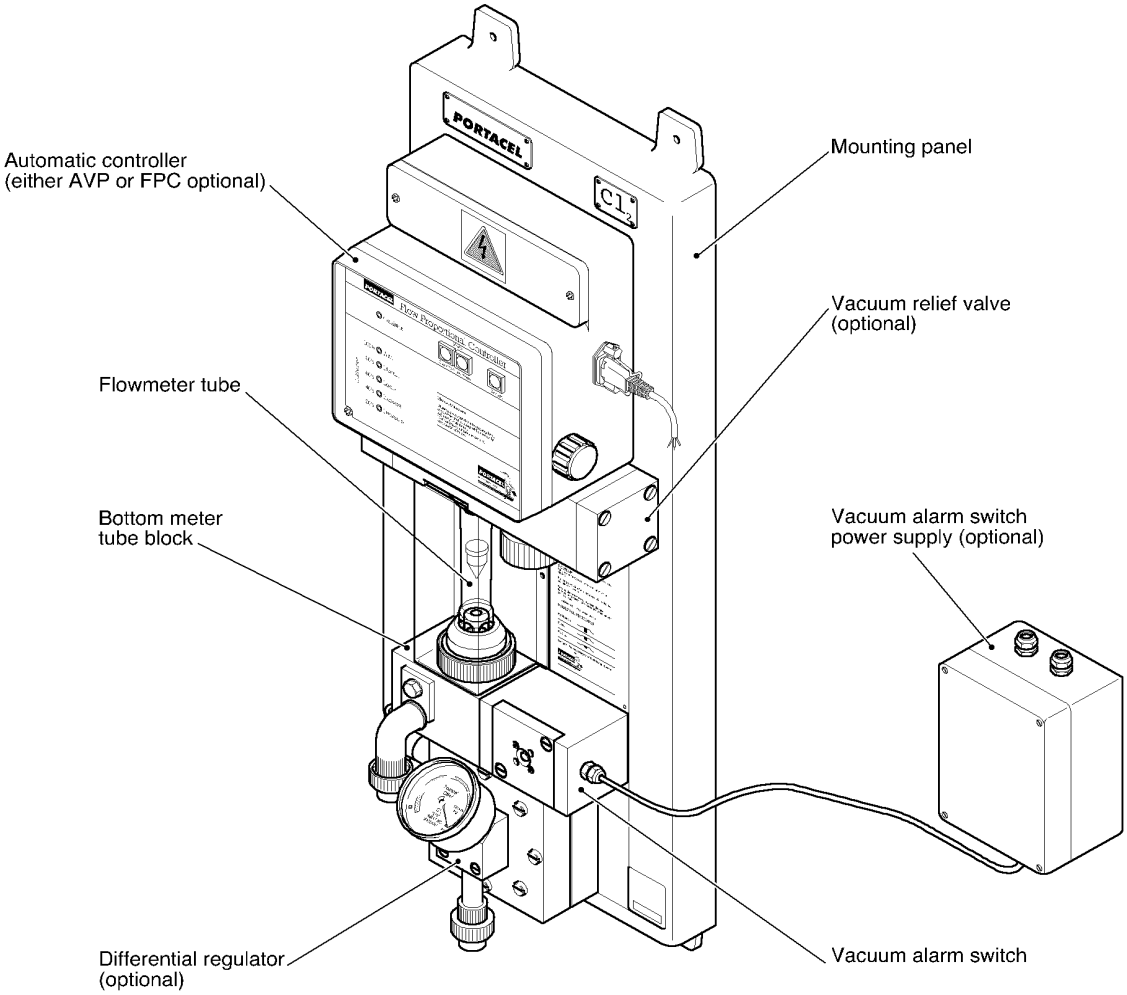

Fig. 2-1 Thames 12 Dosing Unit Principal Components

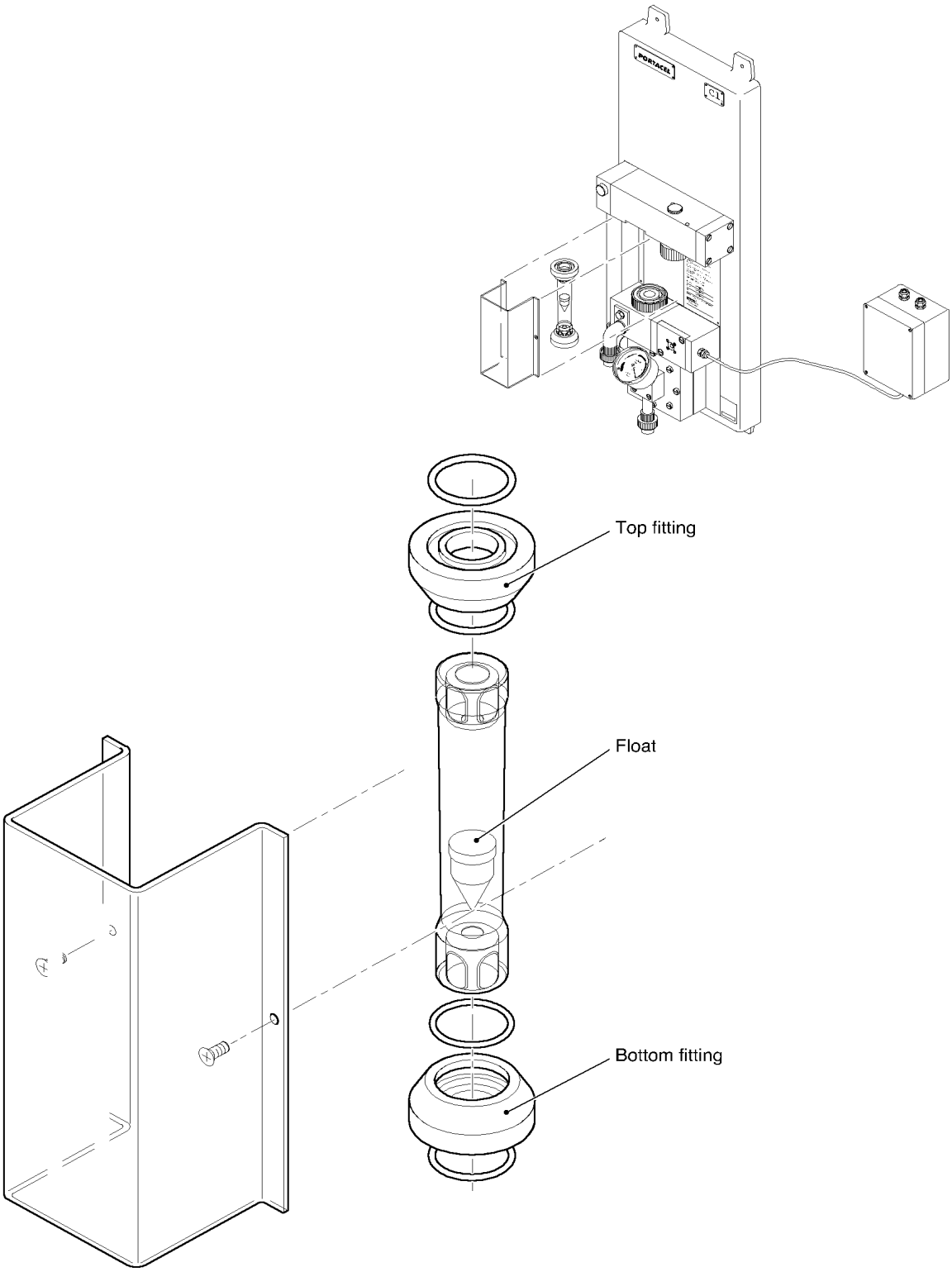

Fig. 2-2 Typical Arrangement of Flowmeter Tube

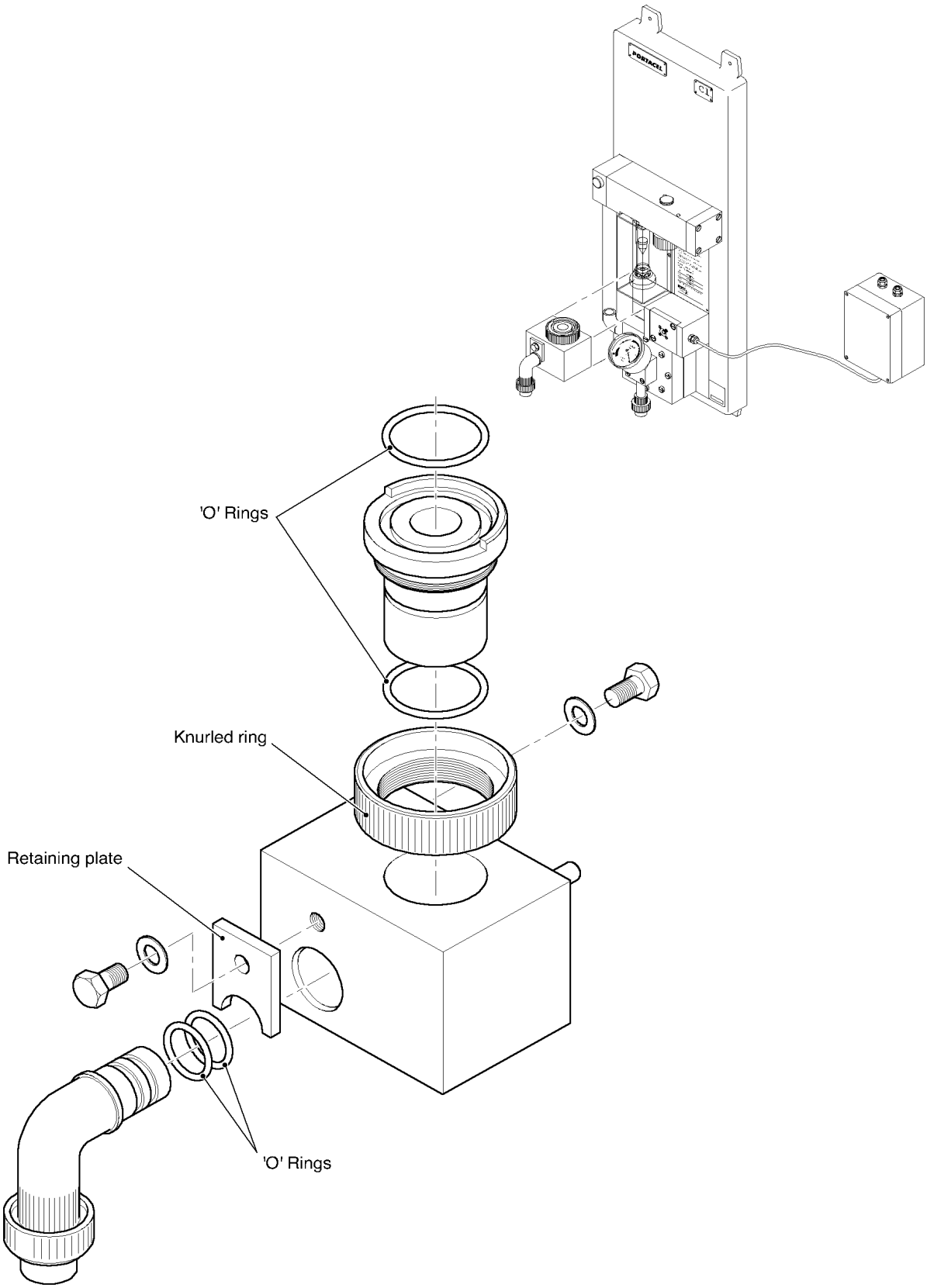

Fig. 2-3 Bottom Meter Tube Block Assembly

2.3 Gas Control Valve

The gas control valve (fig. 2-4) sits above the flowmeter tube from which the gas flow enters the valve block.

the gas control valve enables the gas flow to be regulated using a knurled control knob on its under side. The control knob is attached to a spindle which has a gear profile meshing with a rack profile on the side of the control valve spindle.

The control valve spindle is positioned horizontally and is drawn left and right by the gear and rack. At the left hand end of the spindle a Vee groove is formed in a parallel diameter section of the spindle which passes through a short bore of the same diameter as that part of the spindle with the Vee groove. When the valve spindle is moved to the left the flow is restricted, and when the spindle is drawn to the right the gas flow increases as the section of the Vee groove opens out.

On a Thames 12 Dosing Unit fitted with either an automatic valve positioner (AVP) or a flow proportional controller (FPC) a motor drives an extension of the manual control knob shaft to rotate the valve spindle. (If an AVP or FPC is fitted refer to Chapter 6 - Options for details).

Turning the knob:

(a) Counter-clockwise, looking up from below, **opens the valve**.
(b) Clockwise, looking up from below, **closes the valve**.

The manual control knob is marked with a yellow dot which when aligned with the yellow line on the valve block puts the valve into the closed position.

2.4 Vacuum Relief Valve (Optional)

The control valve block can be fitted with a vacuum relief valve (Fig. 2-4) at its right-hand end. This valve releases any excessive vacuum created in the event of a restriction of gas supply (ie: when the gas cylinder is exhausted). A vent tube allowing air into the valve to relieve the vacuum enters the valve block at the top surface, this tube draws air in from the outside of the building.

2.5 Differential Regulator (Optional)

The differential regulator is designed to maintain a constant pressure differential across the control valve. At any given control valve opening position, the differential regulator will ensure that any erratic fluctuation in vacuum from the ejector will not alter the pressure difference across the valve which could increase, or decrease, the amount of gas passing through the valve aperture.

The regulator maintains the flow of gas constant to the manual control valve setting.

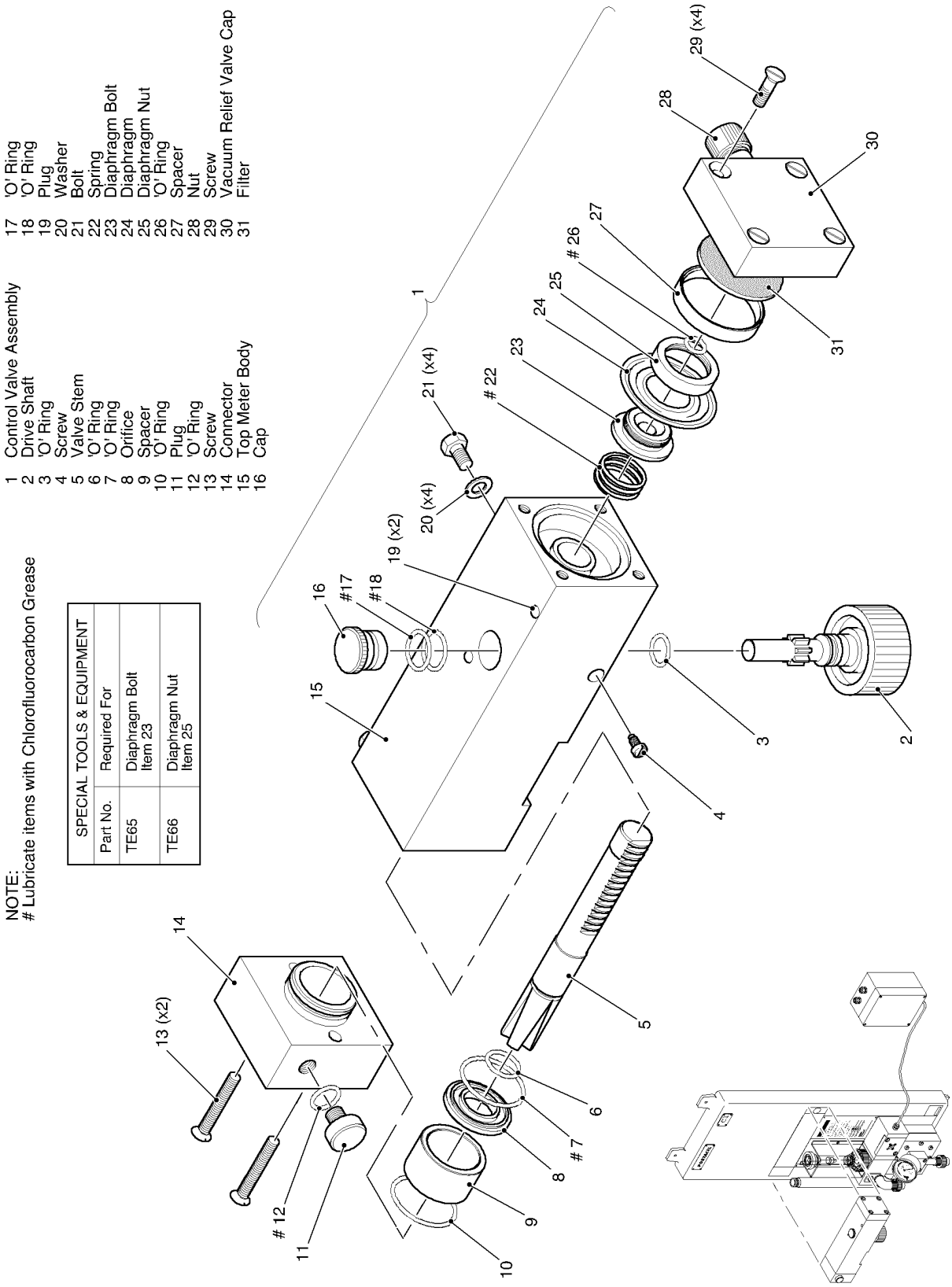

Fig. 2.4 Gas Control and Vacuum Relief Valve

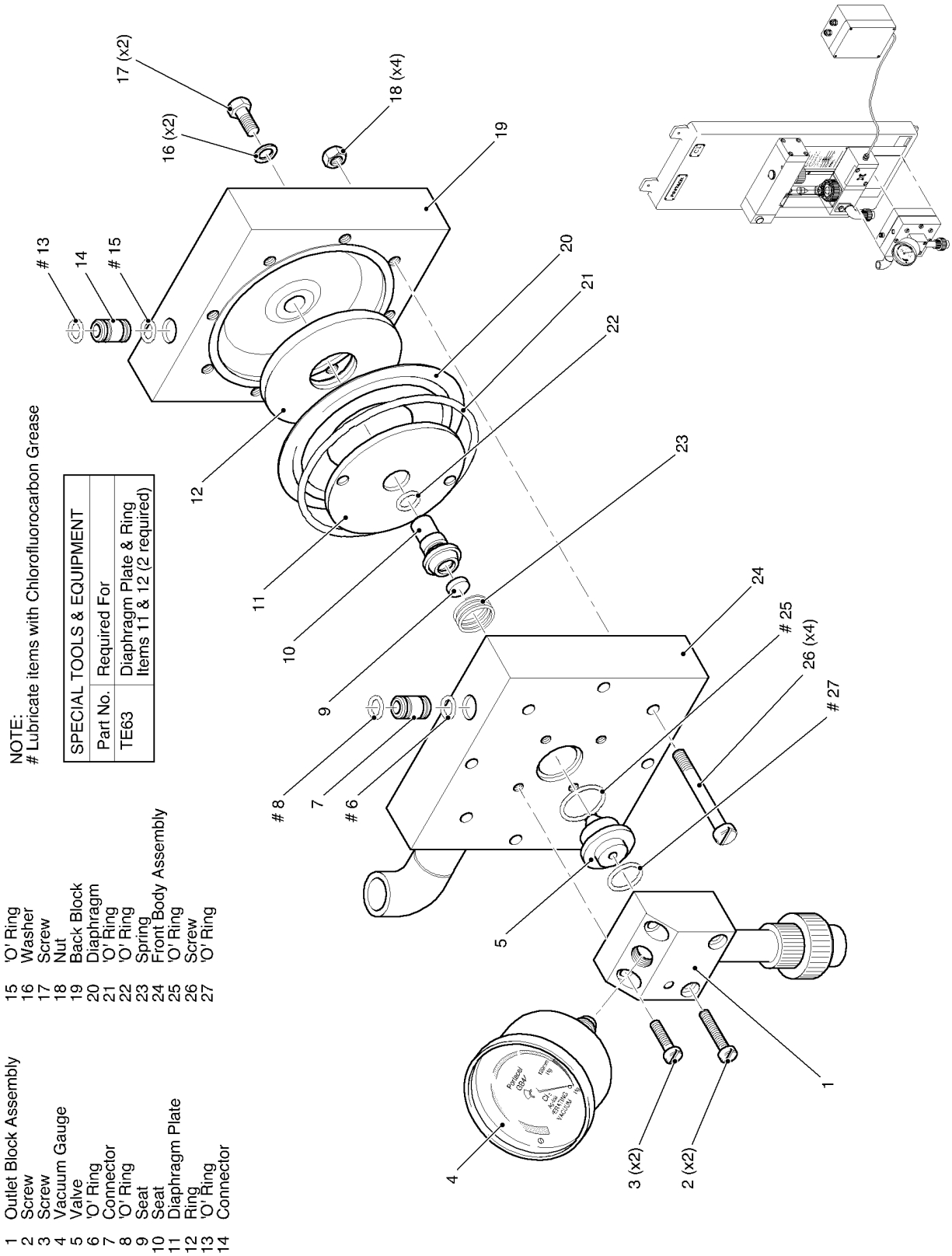

NOTE:
Lubricate items with Chlorofluorocarbon Grease

SPECIAL TOOLS & EQUIPMENT	
Part No.	Required For
TE63	Diaphragm Plate & Ring Items 11 & 12 (2 required)

1 Outlet Block Assembly
2 Screw
3 Screw
4 Vacuum Gauge
5 Valve
6 'O' Ring
7 Connector
8 'O' Ring
9 Seat
10 Seat
11 Diaphragm Plate
12 Ring
13 'O' Ring
14 Connector
15 'O' Ring
16 Washer
17 Screw
18 Nut
19 Back Block
20 Diaphragm
21 'O' Ring
22 'O' Ring
23 Spring
24 Front Body Assembly
25 'O' Ring
26 Screw
27 'O' Ring

Fig. 2-5 Differential Regulator

2.6 Vacuum Gauge

The differential regulator (fig. 2-5) is fitted with a vacuum gauge indicating the vacuum in the unit. The gauge is marked with a red and a green section. The red section indicates that the vacuum within the unit is not sufficient for the unit to operate correctly. A vacuum indication within the green section indicates that the unit will operate correctly.

2.7 Vacuum Alarm Switch (Optional)

The vacuum alarm switch (Fig. 2-6) is fitted to the side of the bottom meter tube block and produces a signal on detection of a high or low vacuum. The values of high and low vacuum are set at manufacture but can be site adjusted. The switch can be connected to external alarms.

2.8 Mounting Panel

The Thames 12 Dosing Unit is assembled on a mounting panel constructed of glass reinforced plastic (GRP).

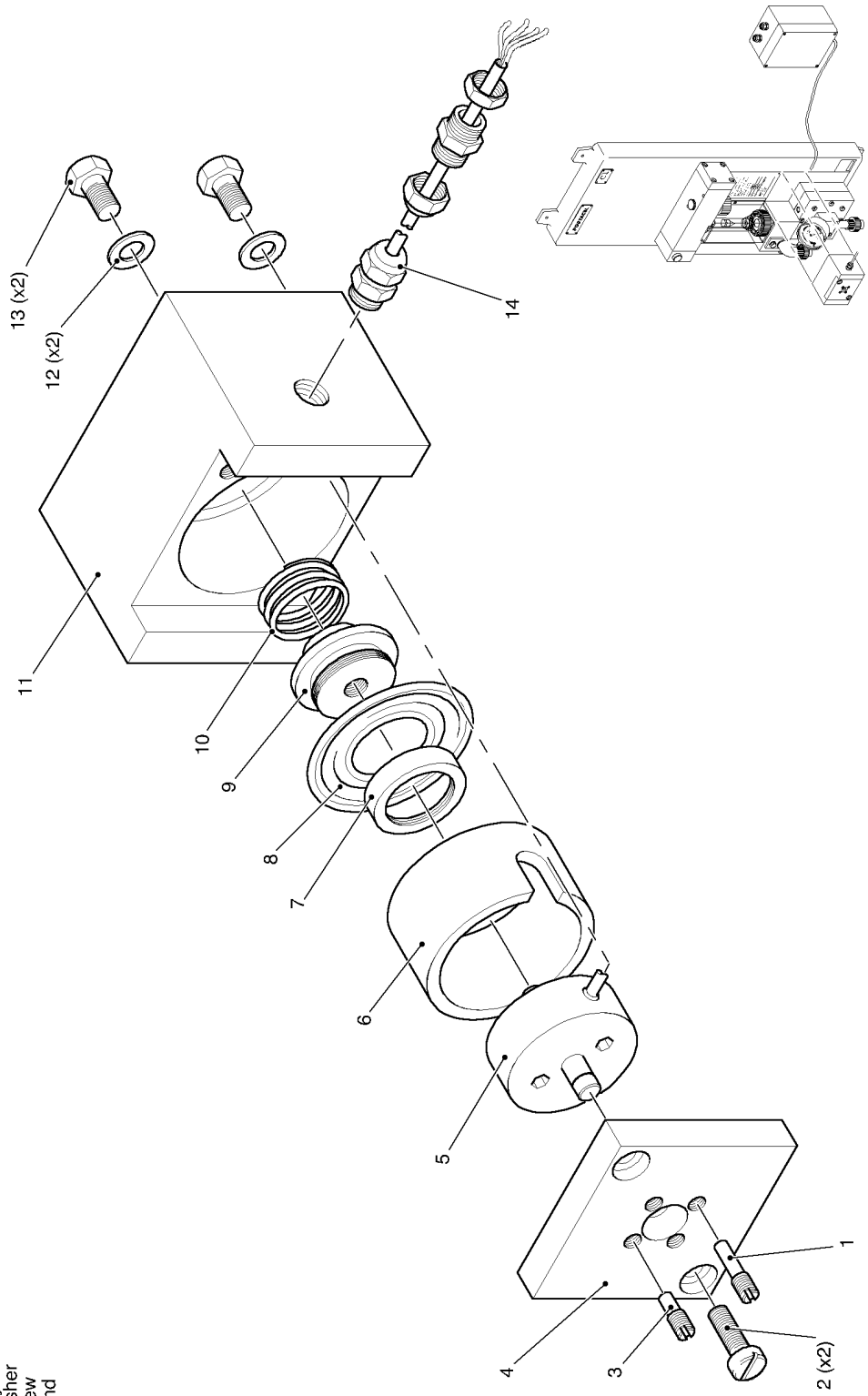

SPECIAL TOOLS & EQUIPMENT	
Part No.	Required For
TE65	Diaphragm Bolt Item 9
TE66	Diaphragm Nut Item 7

1 Adjustment Screw (low)
2 Screw
3 Adjustment Screw (high)
4 Cap
5 Switch Unit
6 Spacer
7 Diaphragm Nut
8 Diaphragm
9 Diaphragm Bolt
10 Spring
11 Body
12 Washer
13 Screw
14 Gland

Fig. 2-6 Vacuum Alarm Switch

3. SYSTEM INTEGRATION

To enable the Thames 12 Dosing Unit to operate correctly it must be integrated into a system (see Fig. 2-7) with the following:

(a) Supply of dosing gas.
(b) Vacuum Regulator.
(c) Vacuum piping between the regulator and the unit.
(d) Ejector unit.
(e) Vacuum piping between the unit and the Ejector.
(f) System alarm connections (as required).

3.1 Dosing Gas Supply

The dosing gas is supplied under pressure to the vacuum regulator. The supply, piping and control are installed by the customer and in accordance with current regulations.

3.2 Vacuum Regulator

the vacuum regulator controls the gas to the Thames 12 Dosing Unit via a vacuum system. The vacuum required to operate the regulator is supplied from the ejector, if the vacuum fails then the gas supply is cut off.

3.3 Piping

Plastic pipe is used to supply the vacuum from the ejector to the vacuum regulator via the Thames 12 Dosing Unit. The same piping is used to supply the gas to the ejector via the Thames 12 Dosing Unit. The size of the piping will depend on the dosing rate required.

3.4 Alarms

External alarms and monitoring equipment can be connected to the vacuum switch, fitted primarily for control and auto changeover purposes it is also utilised to notify the operator of an over-vacuum situation or of a failure of vacuum.

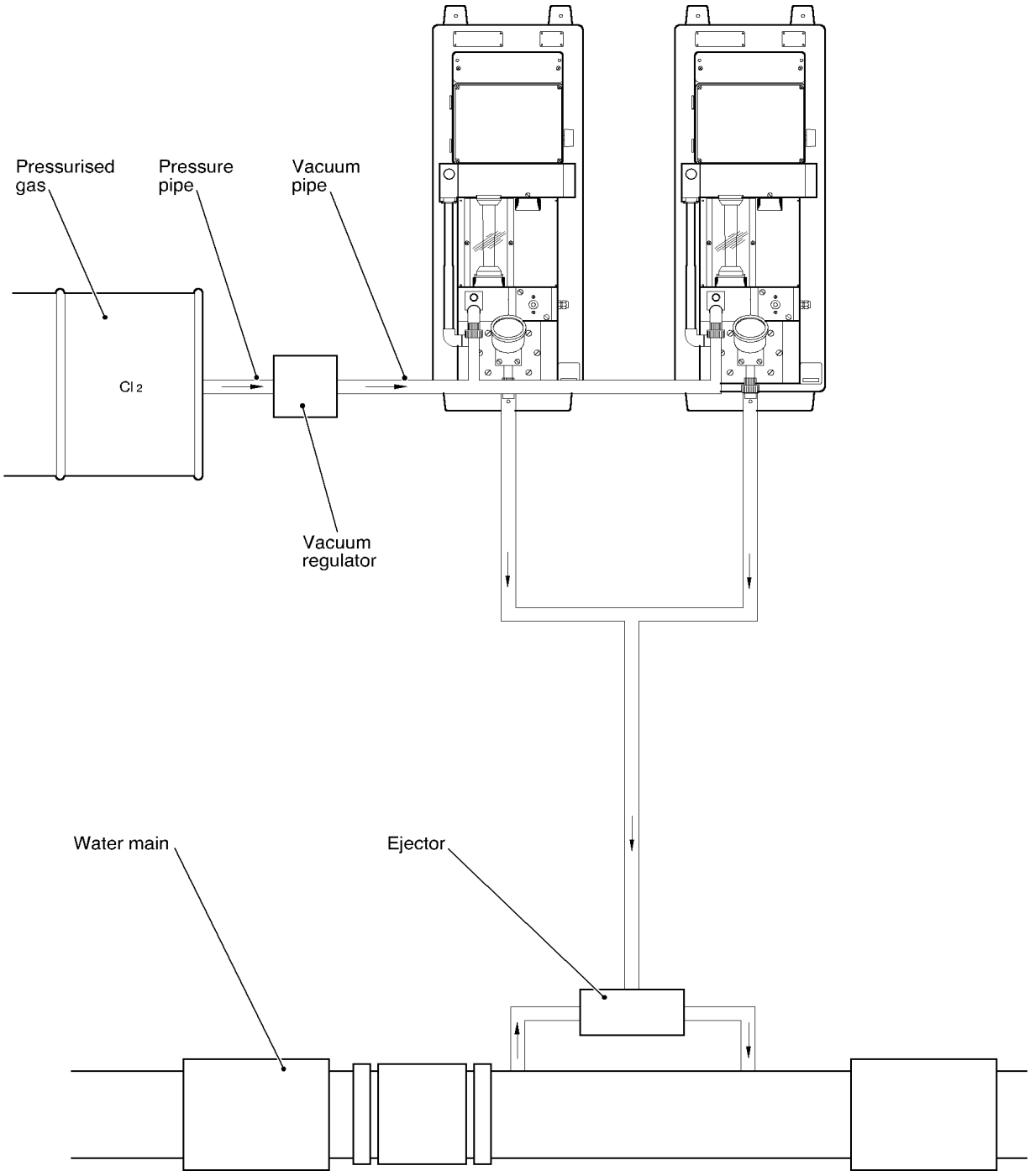

Fig. 2-7 Dosing System

Chapter 3

Installation and Commissioning

Contents

Para.		Page
	INTRODUCTION	**3.3**
1.	**GENERAL**	**3.5**
1.1	Choice of Site	3.5
1.2	Unpacking the Equipment	3.6
1.3	Packing Inventory	3.6
2.	**INSTALLING THE THAMES 12 DOSING UNIT(S)**	**3.6**
2.1	Mounting the Unit	3.7
2.2	Tubing Connections	3.7
2.3	Vacuum Relief Valve Vent Tube (if fitted)	3.9
2.4	Vacuum Alarm Switch (if fitted)	3.10
3.	**COMMISSIONING**	**3.13**
3.1	General	3.13
3.2	Gas Regulating Function	3.13
3.2.1	Checking for Vacuum	3.13
3.2.2	Checking for Gas Leaks	3.14

ILLUSTRATIONS

Fig. No.		Page
3-1	Drilling Diagram for Mounting Panel	3.8
3-2	Drilling Diagram for the Vacuum Alarm Switch Power Supply Box	3.10
3-3	Connections for the Vacuum Alarm Switch Power Supply Box	3.12

TABLES

Table No.		Page
3-1	Vacuum Alarm Voltage Links	3.11

INTRODUCTION

This Chapter gives the description required to Install and Commission the Manual Thames 12 Dosing Unit. For the extra procedures required to install an automatic valve positioner (AVP) or flow proportional controller (FPC) refer to the specific Operating and Maintenance Manual for each (AVP - Part No. 41313, FPC - Part No. 41314).

1. GENERAL

These installation and commissioning instructions are prepared assuming that the work will be carried out by an approved and experienced installation and commissioning engineer accustomed to working with this type of equipment and the plant in which the Thames 12 Dosing Unit will be working.

1.1 Choice of Site

The following criteria should be considered when selecting a site for installing the Dosing Unit(s):

CAUTION!
To prevent liquefaction of the gas between the storage cylinder and vacuum regulator, the ambient temperature should be the same as, or higher than, that around the gas storage cylinder(s). Pipework should not be routed through draughts or cold spots at any point.

CAUTION!
Allow at least 300 mm access space to the left-hand side of the unit for removal and servicing of the valve stem.

(a) An adequate supply of clean water under sufficient pressure is needed to operate the ejector.
(b) The distance from the ejector in the dosing loop to the point of dosing into the water main should be as short as possible with a minimum of obstacles that could cause a loss of head.
(c) The pipe runs between the gas cylinders and the vacuum regulator, should be as short as possible.
(d) Vacuum lines between dosing unit ejector and dosing unit vacuum regulator should be kept as short as practically possible.
(e) It is essential to have easy access to the unit for both operation and maintenance. Wherever possible the unit should be mounted in an area which is well lit and gives convenient access all round the unit and at a height at which the unit can be commissioned, operated and maintained with the operator standing on the ground. Where this is not possible, specific risk assessment must be carried out to determine safe methods of working.

1.2 Unpacking the Equipment

It is advisable to unpack the unit at the site where it is to be installed. Check each item against the packing note, and ensure that the consignment is complete before discarding the packing material.

Examine each item to see that it is undamaged and that all vents, ports, etc, are clean and free from packing. Should any of the items be damaged, it will be helpful that the items are returned in or with the original packing in which they were dispatched.

1.3 Packing Inventory

> **CAUTION!**
> Check that the unit received is correct for both the voltage and the chemical with which it is intended to be used. The latter is important since some of the components in the unit have to be of the correct material for the particular gas.

The inventory of the items that are packed for dispatch is listed on the packing note. The items listed will relate to the particular order against which they were dispatched. No installation fixtures are included in the packing. This enables bolts or screws to be obtained from the site to suit the particular installation.

2. INSTALLING THE THAMES 12 DOSING UNIT(S)

> **CAUTION!**
> Only ualified Personnel must be allowed to carry out this work.

(1) Make sure that:
   (a) The vacuum regulator has been installed according to manufacturer s instructions.
   (b) The ejector has been installed according to manufacturer s instructions.

2.1 Mounting the Unit

To mount the Thames 12 Dosing Unit:

(1) Make sure that the surface of the wall is level and smooth and that the unit will sit vertically.

(2) Offer up the Thames 12 Dosing Unit with its mounting panel to the wall and mark off the drilling holes on to the wall. Alternatively, the position can be pre-drilled according to the dimensions given in the drilling diagram (see Fig. 3-1).

NOTE:
The bolts or wood screws should be of suitable diameter for the 10 mm slots in the brackets at the rear of the panel.

(3) Drill the holes and use bolts if fixing to a frame or wood screws and Rawlplugs if fixing to a wall.

Mount the panel vertically against a builder s level in order to ensure that the ball or float in the flowmeter will be free to operate and will not stick in the meter tube.

2.2 Tubing Connections

Connections for the tubing from the vacuum regulator and to the ejector require to be fitted to the unit, these are provided with the unit. The following points need to be noted:

(a) The 6 mm tube is used to connect to the vacuum regulator and to the ejector. It should be in one piece if at all possible, but if not then a double union joint is permissible.

(b) The assemblies that make use of the bush are fitted into the elbow by means of the knurled nut. The bush is to be cemented into the parallel shank of the nut.

(1) Connect the 6 mm bore tube from the Thames 12 Dosing Unit to the vacuum regulator and tighten the union by hand - tools are not necessary.

(2) Connect the 6 mm bore tube from the Thames 12 Dosing Unit to the ejector and tighten the union by hand - tools are not necessary.

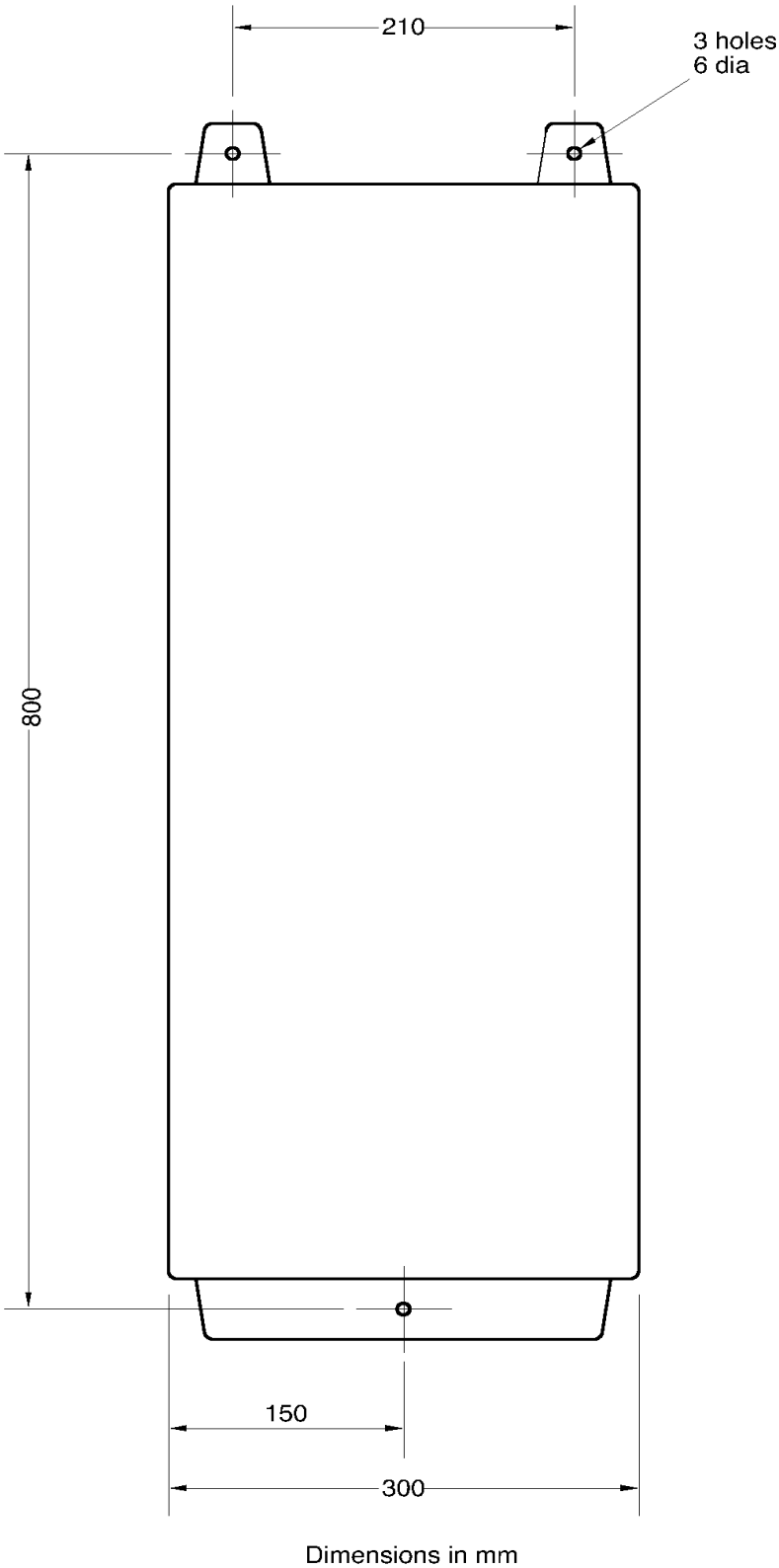

Fig. 3-1 Drilling Diagram for Mounting Panel

2.3 Vacuum Relief Valve Vent Tube (If fitted)

WARNING!

The gas used can cause serious injury. It is essential to ensure that the vent tube from the vacuum relief valve is taken outside the building and to be clear of nearby windows and doors or where people walk by outside. Leading the vent into a nearby room or other space within the building is dangerous and not acceptable.

CAUTION!
Ensure that the open end of the tubing is directed downwards to avoid rain and moisture entering the tubing. Should moisture be drawn into the unit and mix with the gas, a highly corrosive solution within the unit may result. Insect screens are available as optional items.

(1) Where a vacuum relief valve is fitted to the control valve block, run the length of tubing from the valve vent outlet to the outside of the building.

2.4 Vacuum Alarm Switch (If fitted)

Thames 12 Dosing Units that are supplied with a vacuum alarm switch require a power supply for the switch to be installed. The vacuum alarm switch unit comes with the switch and interconnecting cable pre-assembled to the bottom meter tube block. The free ends of the cables require to be connected to the power supply box which comes separately so that it may be installed where it is convenient (within 2 metres).

To install the power supply box:

(1) Drill the fixing hole positions according to the drilling diagram (see Fig. 3-2).

(2) Remove the front cover, and screw or bolt the box through the holes revealed.

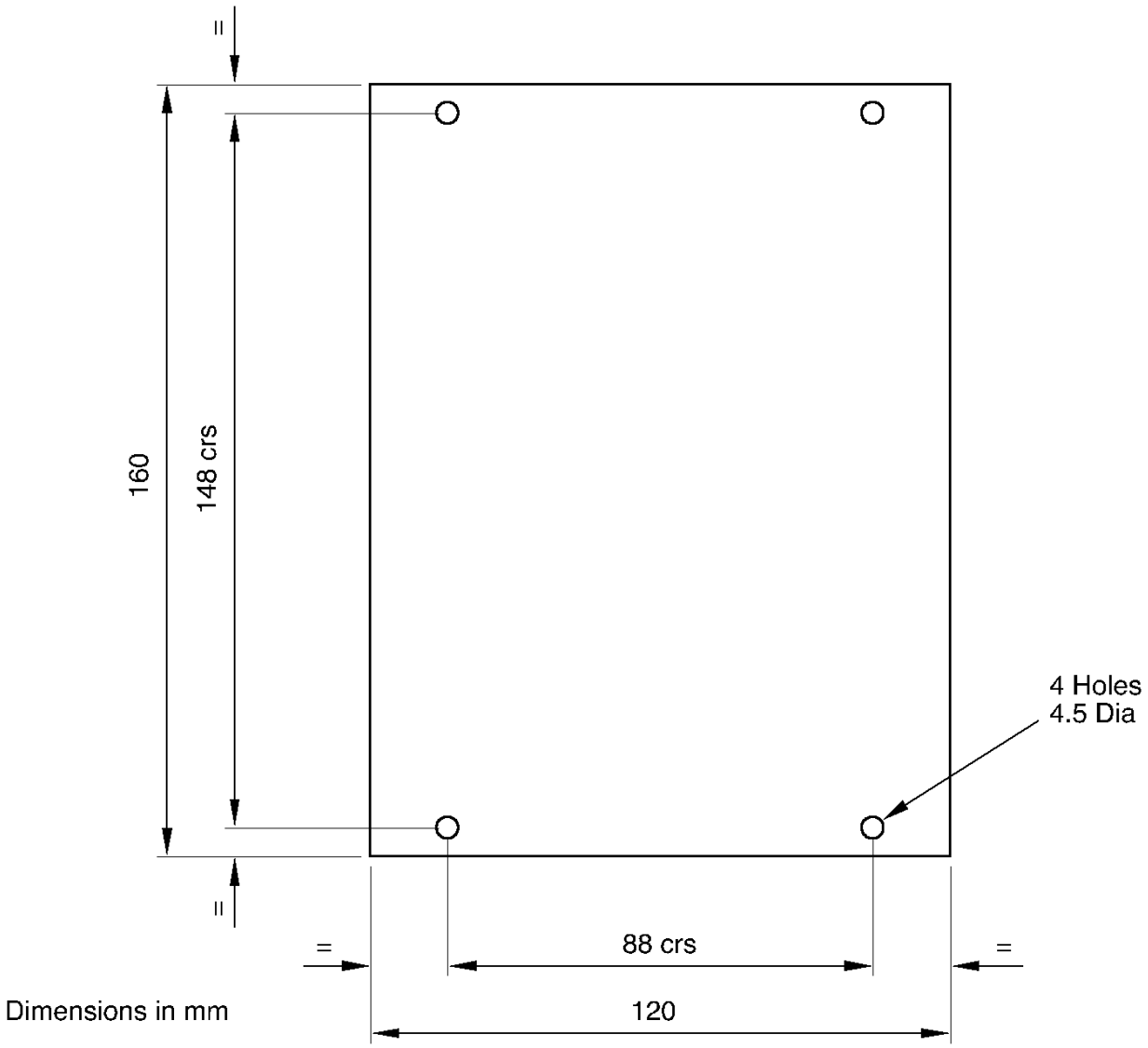

Fig. 3-2 Drilling Diagram for the Vacuum Alarm Switch Power Supply Box

WARNING!
Electrical power can kill. Some installations have external alarm systems provided with their own power supply at mains voltage which comes back to the unit for switching. Check if any connections to this unit are supplied with electrical power and isolate the power before continuing.

NOTE:
A label will have been attached to the power supply box at the factory to state for which mains voltage the power supply box has been set-up, namely, 240V or 110V AC.

Two Handbag links are to be inserted as follows:

Voltage used	Links inserted
240V AC	LK3 and LK4
120V AC	LK1 and LK2

Table 3-1 Vacuum Alarm Voltage Links

(3) Locate the two pairs of links into which the two handbag links are to be inserted for the correct voltage (see Table 3-1 above and Fig. 3-3).

(4) Connect the free ends of the lead from the switch in the control valve block to the four terminals in the power supply box under the designation **SWITCH** (see Fig. 3-3). The terminals are indicated by colours which will match the colours or labels of the free end of the lead.

(5) Connect the remote alarm indicators to the six terminals above the designation **ALARMS** . These should be connected for high vacuum or low vacuum and normally open or normally closed as suits the installation.

(6) Ensure that the power supply is switched off and connect up the three terminals above the designation **SUPPLY** .

(7) Replace the front cover, and tighten up the screws securing the cover.

(8) Switch on the electrical supply.

(9) The unit is now ready for commissioning.

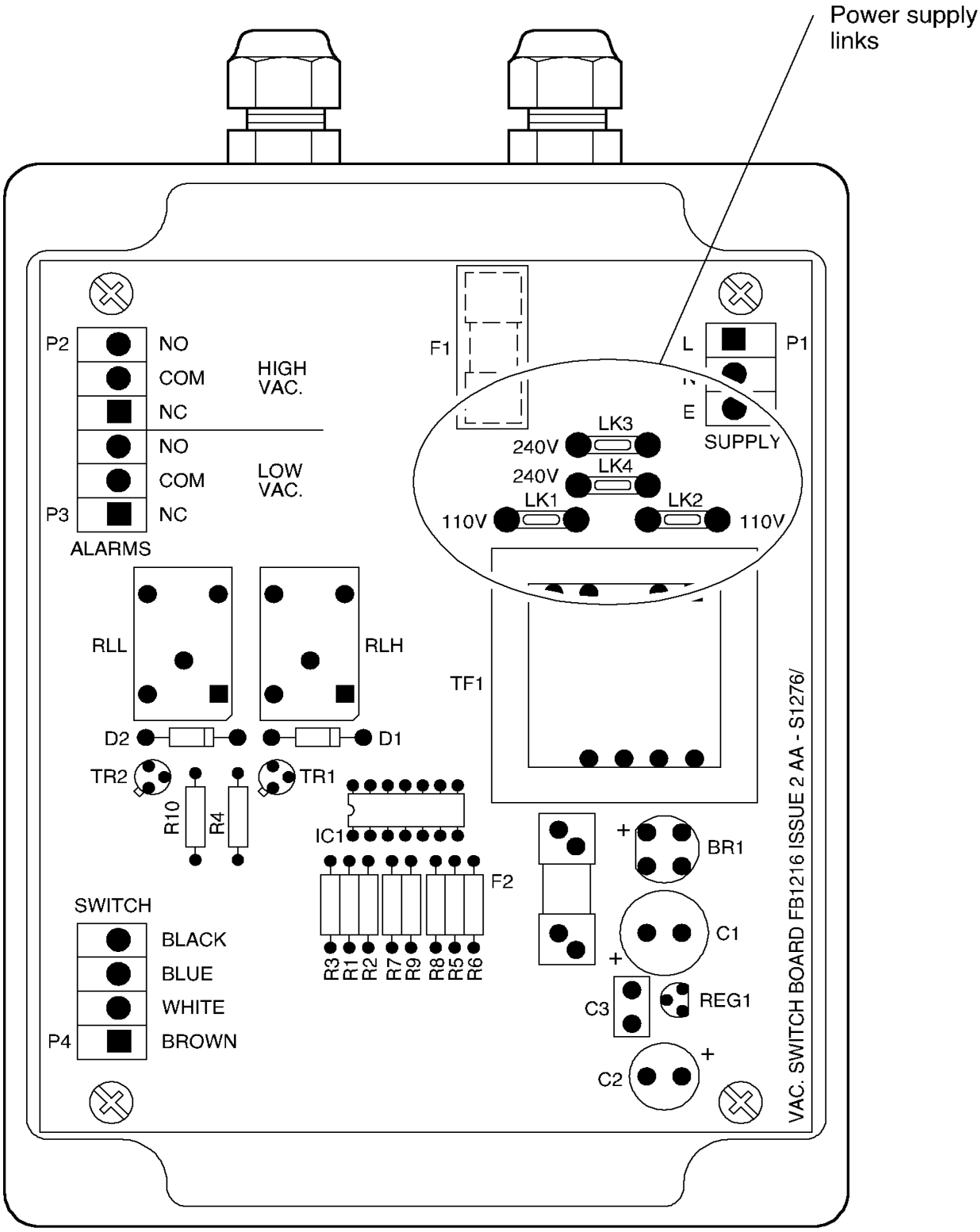

Fig. 3-3 Connections for the Vacuum Alarm Switch Power Supply Box

3. COMMISSIONING

3.1 General

The Thames 12 Dosing Unit must have been installed according to the instructions in Paragraph 2 - **INSTALLATION**, with all components fixed securely and pipe work connections tight.

In preparing these commissioning instructions it is assumed that the work will be carried out by an approved and experienced commissioning engineer accustomed to working with this type of equipment and the plant in which the Dosing Unit will be working.

3.2 Gas Regulating Function

After Installation and prior to manual operation of the Thames 12 Dosing Unit the following areas must be checked:

(a) Vacuum.
(b) Gas Leaks.

3.2.1 Checking for Vacuum

(1) Open the valve of the injection fitting at the dosing point on the water main if one is fitted.

(2) Turn on the water supply to the ejector, starting the booster pump if one is fitted, and check the ejector and pipework for leaks. Rectify as necessary.

NOTE:
If a Portacel ejector is being used it will automatically generate the vacuum to ensure correct operation of the Dosing Unit.

(3) Test that the ejector is generating vacuum. Any vacuum test accepted by a competent commissioning engineer can be used, but a basic test is to disconnect the tube somewhere that is convenient between it and the Dosing Unit and place a finger over the disconnected tube to detect a suction. This test does not prove that there is sufficient vacuum, this can only be proven when the full system is operational.

(4) If a vacuum cannot be detected, check that:

(a) The operating water pressure to the ejector is at site specification.
(b) The back pressure is as per specification.
(c) The booster pump, if fitted, is running.
(d) All relevant valves in the main and the loop are open.
(e) The ejector nozzle is not blocked or damaged. (This will mean removing the ejector from the loop after stopping the pump and isolating the loop in order to do so).

3.2.2 Checking for Gas Leaks

NOTE:
For safety, it is recommended that during commissioning of multi-cylinder drum header systems, pressure tests and leak tests are carried out using nitrogen or dry air, and not the gases to be used for dosing.

With the ejector creating a vacuum the gas cylinder valve(s) may be opened and the system tested for leaks. Gas leak tests must not be attempted until the ejector is working properly because should there be a leak in the system then the ejector must draw in air and the gas extracted safely through the ejector rather than be allowed to escape into the work area.

WARNING!

The gases used can kill. The pipework between the vacuum regulator and the gas cylinder does not constitute part of the Dosing Unit and is not covered by this manual. Any leak between the vacuum regulator and the gas cylinder(s) will require to be rectified with reference to the relevant manufacturer's manual.

WARNING!

The gases used can kill. Do not open the gas valve unless there is sufficient vacuum. Breathing apparatus and protective clothing must be worn when testing for leaks and the correct gas detecting procedure carried out as defined in the site instructions and the gas manufacturer's instructions.

NOTE:
Any recognised method of leak testing accepted by a competent commissioning engineer can be used.

(1) The gas supply may now be turned on.

(2) Using a dry air or nitrogen supply pressurise the complete gas system up to a maximum pressure of 16 bar gauge and check all pipework and connections for leaks using the chosen recognised leak test.

(3) On completion of the pressure test connect up the relevant operational gas supply cylinder.

(4) If any leaks have been located and repaired, and the Thames 12 Dosing Unit and pipework are secure, the manual unit is now considered to be commissioned.

(5) If the unit is supplied with an AVP or FPC refer to the relevant Manual to Install and Commission the AVP (Part No. 41313) or FPC (Part No. 41314).

Chapter 4

Operating Instructions

Contents

Para.		Page
	INTRODUCTION	**4.3**
1.	**GENERAL**	**4.6**
2.	**START-UP**	**4.6**
3.	**OPERATION**	**4.6**
4.	**SHUTDOWN**	**4.7**
4.1	Shutdown up to 24 Hours	4.7
4.2	Shutdown over 24 Hours	4.7

ILLUSTRATIONS

Fig. No.		Page
4-1	Thames 12 Dosing Unit Principal Components	4.5

INTRODUCTION

This Chapter gives the procedures needed to operate the Thames 12 Dosing Unit.

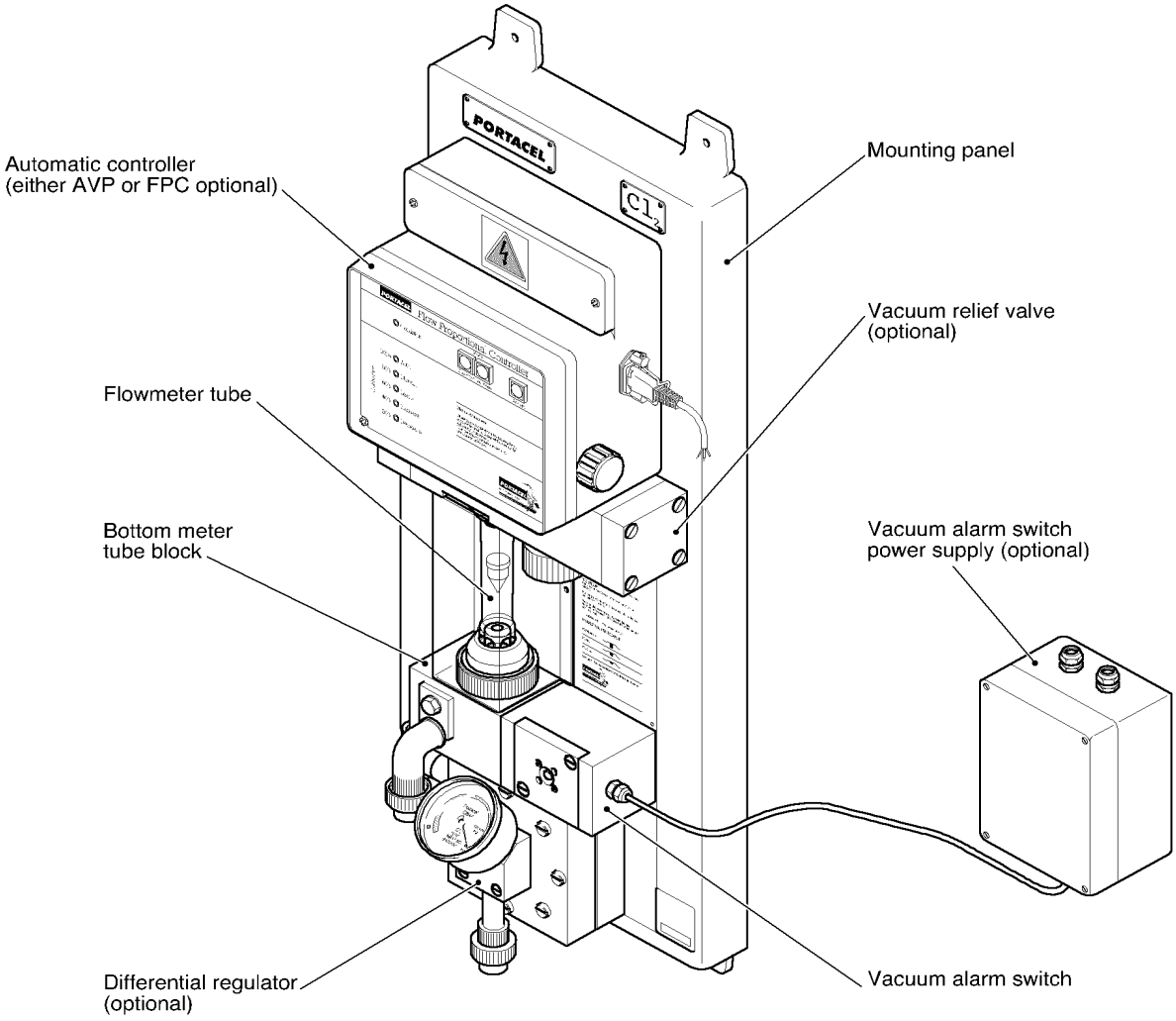

Fig. 4-1 Thames 12 Dosing Unit Principal Components

1. GENERAL

The procedures detailed in this Chapter are the procedures to operate the Thames 12 Dosing Unit (see Figure 4-1) manually from the front panel. For the detailed procedures required to operate the unit using the automatic valve positioner (AVP) or flow proportional controller (FPC) refer to Chapter 6 - Options Chapter (if the AVP is fitted).

2. START-UP

WARNING!

If incorrectly used this equipment can cause severe injury. Those who use the equipment should be trained in its proper use and should have read and understood the safety instructions contained in this manual before attempting to operate or adjust the equipment.

WARNING!

The gas used can cause serious injury. Before switching the gas on refer to the safety precautions required in the manufacturer's data sheets and the site operating instructions.

To start the Thames 12 Dosing Unit carry out the following procedure:

(1) At the Thames 12 Dosing Unit turn the manual control knob to align the yellow dot on the manual control knob with the line on the valve block (ie. valve closed).

(2) Switch the vacuum regulator heater to ON and wait 30 minutes.

(3) Open the valve on the ejector fitting (if a valve is fitted).

(4) Make sure that water pressure is supplied to the ejector.

(5) Turn the gas pressure supply to the vacuum regulator to ON.

3. OPERATION

NOTE:
Before the operator starts the Thames 12 Dosing Unit the level of dose required must be calculated.

The manual operation of the Thames 12 Dosing Unit is carried out with the operator at the manual control of the unit. To operate the unit:

(1) Carry out the Start-up procedures detailed in paragraph 2.

NOTE:
The gas flow meter may be fitted with a flat-topped float or a ball. The gas flow reading is taken by aligning the top of the float, or the horizontal diameter of the ball, by eye with the graduation marks on the Flowmeter Tube. The reading will be in grams hour (g h) for dosing capabilities up to 1 Kg h and kilogrammes hour (Kg h) for capabilities over 1 Kg h.

(2) Turn the manual control knob counter clockwise (looking up at the knob) to open the valve and set the gas flow to the required setting as indicated by the flowmeter tube.

NOTE:
To adjust gas flow:

Reduce	-	Turn clockwise.
Increase	-	Turn counter-clockwise.

(3) Adjust the manual control knob as required to maintain the correct gas flow.

4. SHUTDOWN

Two procedures can be used to shutdown the Thames 12 Dosing Unit. A procedure for short-term shut down up to 24 hours and a procedure for over 24 hours.

4.1 Shutdown up to 24 Hours

(1) After the motive water pump has ceased operating, close the water supply to the ejector.

(2) As the vacuum reduces, the vacuum regulator will close automatically shutting off the gas supply.

4.2 Shutdown over 24 Hours

(1) After the motive water pump has ceased operating, close the water supply to the ejector.

(2) As the vacuum reduces, the vacuum regulator will close automatically shutting off the gas supply.

(3) Shut off the gas supply at the drum storage cylinder.

(4) Wait until the flowmeter shows zero flow then close the water supply valves to the ejector.

(5) Switch the vacuum regulator heater to OFF.

(6) At the Thames 12 Dosing Unit turn the manual control knob clockwise to align the yellow dot on the manual control knob with the line on the valve block (ie. valve closed).

Chapter 5

Maintenance

Contents

Para.		Page
	INTRODUCTION	**5.5**
1.	**GENERAL**	**5.7**
2.	**REMOVAL AND REPLACEMENT**	**5.8**
2.1	Gas Control Valve	5.8
2.1.1	Removal Procedure	5.8
2.1.2	Replacement Procedure	5.9
3.	**FAULT FINDING**	**5.10**
3.1	Flowmeter Fails to Indicate Gas Flow	5.11
3.2	Insufficient Ejector Vacuum	5.12
3.3	Gas Flow Through Meter Cannot Be Controlled	5.13
3.4	Flowmeter Indicates Flow when Gas is Turned Off	5.14
3.5	Gas Discharges from Vent of Portacel Vacuum Regulator	5.14
3.6	Flow Indicated when Ejector Operating Water Turned Off	5.14
3.7	Water in the Flowmeter	5.15
4.	**SERVICE OF MANUAL CHLORINATOR & SULPHONATOR**	**5.16**
5.	**SERVICE OF AUTOMATIC CHLORINATOR & SULPHONATOR**	**5.18**
6.	**SERVICE OF MANUAL AMMONIATOR**	**5.21**
7.	**SPARE PARTS**	**5.23**

ILLUSTRATIONS

Fig. No.		Page
5-1	Manual Control Valve AAS927 with Vacuum Relief Valve	5.25
5-2	Manual Control Valve AAS1272 without Vacuum Relief Valve	5.27
5-3	Vacuum Alarm Switch AAS1269 (for units with a Differential Regulator)	5.29
5-4	Differential Regulator AAS1259 (for units with Vacuum Alarm)	5.33
5-5	Differential Regulator AAS1286 (for units without Vacuum Alarm)	5.35
5-6	Bottom Meter Block AAS1260	5.37
5-7	Bypass Tube	5.39
5-8	Flowmeter Tube	5.45

TABLES

Table No.		Page
5-1	Spares Kit Manual Type AAS1403	5.16
5-2	Spares Kit Manual Comprehensive Type AAS1404	5.17
5-3	Spares Kit Automatic Type AAS1411	5.18
5-4	Spares Kit Automatic (without Differential Regulator) Type AAS1491	5.20
5-5	Spares Kit Manual Comprehensive Type AAS1448	5.22
5-6	Manual Control Valve with Vacuum Relief Valve Part Numbers (Fig. 5-1)	5.23
5-7	Valve Stem Part Numbers (Figs. 5-1 and 5-2)	5.24
5-8	Manual Control Valve without Vacuum Relief Valve Part Numbers (Fig. 5-2)	5.26
5-9	Vacuum Alarm Switch for units with Differential Regulator Part Numbers (Fig. 5-3)	5.28
5-10	Differential Regulator for units with Vacuum Alarm Part Numbers (Fig. 5-4)	5.30
5-11	Differential Regulator for units without Vacuum Alarm Part Numbers (Fig. 5-5)	5.34
5-12	Bottom Meter Block Part Numbers (Fig. 5-6)	5.36
5-13	Bypass Tube Part Numbers (Fig. 5-7)	5.38
5-14	Flowmeter Tube 12 Kg h Cl_2 SO_2 and 6.0 Kg h NH_3 Part Numbers (Fig. 5-8)	5.40
5-15	Flowmeter Tube 10 Kg h Cl_2 SO_2 and 5 Kg h NH_3 Part Numbers (Fig. 5-8)	5.40
5-16	Flowmeter Tube 5 Kg h Cl_2 SO_2 and 2.5 Kg h NH_3 Part Numbers (Fig. 5-8)	5.41
5-17	Flowmeter Tube 7 Kg h Cl_2 SO_2 and 3.5 Kg h NH_3 Part Numbers (Fig. 5-8)	5.41

TABLES (continued)

Table No.		Page
5-18	Flowmeter Tube 2 Kg h Cl_2 SO_2 and 1 Kg h NH_3 Part Numbers (Fig. 5-8)	5.42
5-19	Flowmeter Tube 1 Kg h Cl_2 SO_2 and 500 g h NH_3 Part Numbers (Fig. 5-8)	5.42
5-20	Flowmeter Tube 500 g h Cl_2 SO_2 and 250 g h NH_3 Part Numbers (Fig. 5-8)	5.43
5-21	Flowmeter Tube 250 g h Cl_2 SO_2 and 125 g h NH_3 Part Numbers (Fig. 5-8)	5.43
5-22	Flowmeter Tube 100 g h Cl_2 SO_2 and 50 g h NH_3 Part Numbers (Fig. 5-8)	5.44
5-23	Flowmeter Tube 50 g h Cl_2 SO_2 and 25 g h NH_3 Part Numbers (Fig. 5-8)	5.44

INTRODUCTION

This Chapter details the maintenance that can be carried out on the Thames 12 Dosing Unit. The fault finding is confined to a few procedures and is shown in flow charts. The Chapter also lists the spares kits available for each of the Thames 12 Dosing Units with respect to the gas being used and the options fitted to the unit. Each kit has a list of parts referring to the illustrations identifying the position that each of the parts are fitted. All available spares are identified in tables and referenced in the illustrations. From the information a trained and qualified Technician will be able to dismantle and service the Thames 12 Dosing Unit.

1. GENERAL

WARNING!

Only trained and qualified Technicians should dismantle any assemblies.

WARNING!

The gas used can cause serious injury. For the safety precautions required refer to the gas supplier's/manufacturer's data sheets and the site operating instructions.

Maintenance is restricted to the checking of the items mentioned in this Chapter, the repair by replacement of the principal components listed in Chapter 2 and the replacement of the items supplied in the spares kits. The Safety Precautions mentioned in this Chapter and in the Safety Precautions section at the front of this Manual must be carried out at all times.

2. REMOVAL AND REPLACEMENT

2.1 Gas Control Valve

WARNING!

Only trained and qualified Technicians should dismantle any assemblies.

WARNING!

The gas used can cause serious injury. For the safety precautions required refer to the gas supplier's/manufacturer's data sheets and the site operating instructions.

WARNING!

The system must be purged of all gas before the equipment is dismantled.

When removing items of the control valve and vacuum relief valve note the orientation of valves, seals and diaphragm to assist in the replacement procedure. To remove the control valve for maintenance, carry out the following:

2.1.1 Removal Procedure

(1) Referring to the site operating instructions isolate the gas supply to the vacuum regulator supplying the unit.

(2) Allow the unit to operate under vacuum (ie with the ejector running) to draw any remaining gas through the pipework.

(3) With the ejector running open the pipework on the vacuum side of the vacuum regulator and as close to the regulator as possible to purge the pipework of gas.

(4) Switch off the ejector.

(5) Using a screwdriver remove and retain the two screws securing the by-pass tube to the control valve and pull the by-pass tube from the seating in the control valve.

(6) Using a screwdriver, remove and retain the four screws retaining the vacuum relief valve to the side of the control valve.

(7) Remove the vacuum relief valve from the control valve.

(8) Using the screwdriver, remove and retain the single screw retaining the control knob to the control valve and remove the control knob and shaft.

(9) Withdraw the control valve stem, control valve operating orifice and seals from the control valve.

(10) Refer to the spares kits listed in this Chapter and replace seals as required with the correct seals for the gas being used.

2.1.2 Replacement Procedure

When replacing the valve make sure that the items are replaced in the correct orientation as noted during removal. To replace the control valve:

(1) Fit all new O ring seals. Do not lubricate the seal fitted to the valve stem.

(2) With the control valve orifice pushed to the closed position against the seal on the control valve stem, carefully insert the stem into the assembly.

(3) Align the control valve stem gearing with the control knob gearing by:
   (a) Pushing the control valve stem into the valve body until the stem sticks out from the face of the body by approx. 1.5mm.
   (b) Aligning the yellow dot on the control knob with the line on the block.
   (c) Inserting the control knob into the gearing on the control valve stem.

(4) Push the by-pass tube into position to make sure that the valve orifice is correctly seated.

(5) Using the screwdriver insert the single securing screw retained in the removal procedure step (9).

(6) Replace the vacuum relief valve component parts, or the blanking plate, and secure with the four screws retained in the removal procedure step (7).

(7) Seal all vacuum pipework disturbed in the removal procedure step (3).

(8) Carry out a gas leak check (refer to Chapter 3).

3. FAULT FINDING

The following procedures represent a selection of the main checks that can be carried out. As with all Fault Finding the success of the task will rely heavily on the skill of the Engineer at the site. The fault diagnosis section is divided into flow charts. The flow charts are to be used to remind an experienced engineer of the items to be checked for some faults that may occur. None of the flow charts give detailed procedures for removal and replacement.

3.1 Flowmeter Fails to Indicate Gas Flow

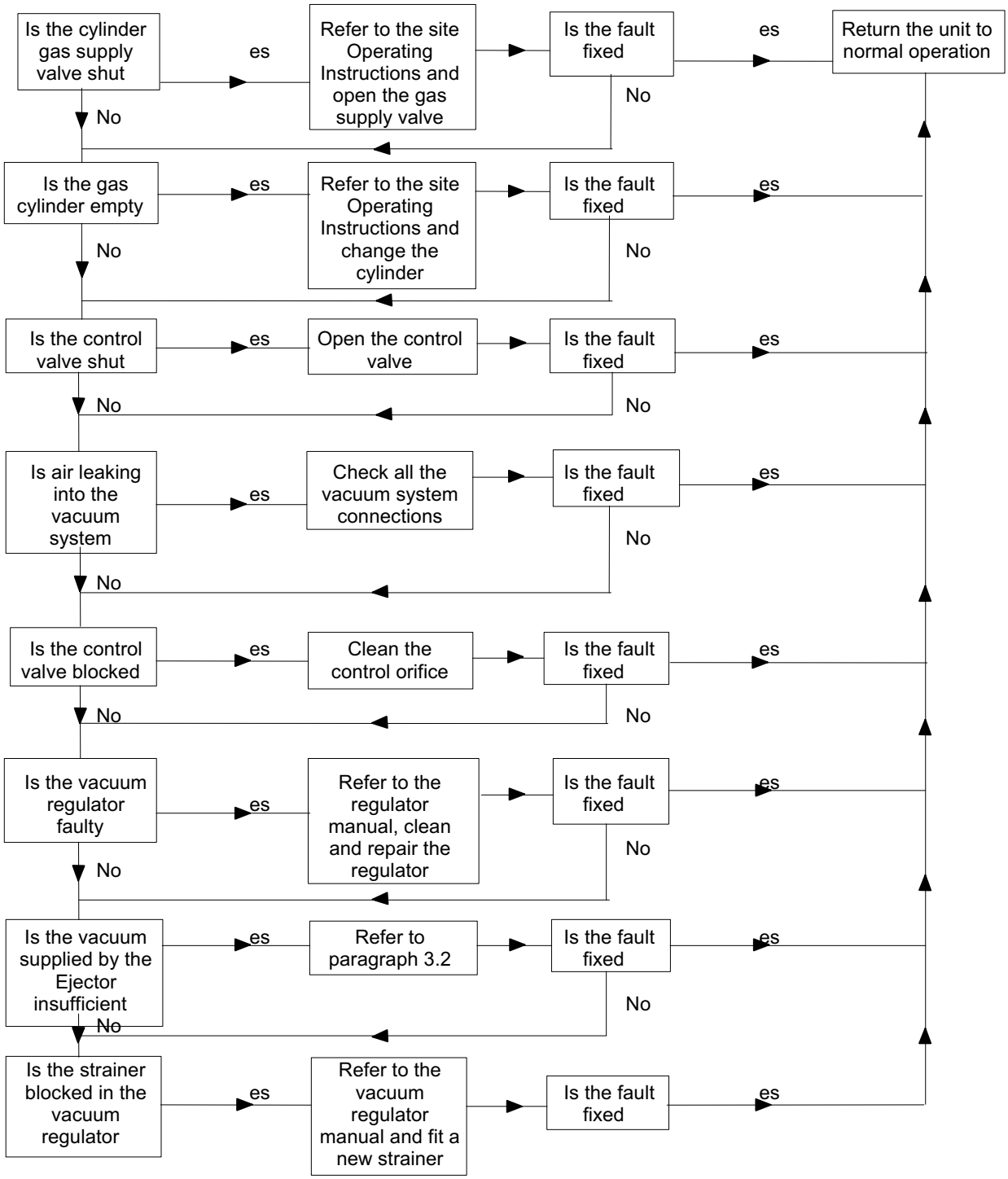

3.2 Insufficient Ejector Vacuum

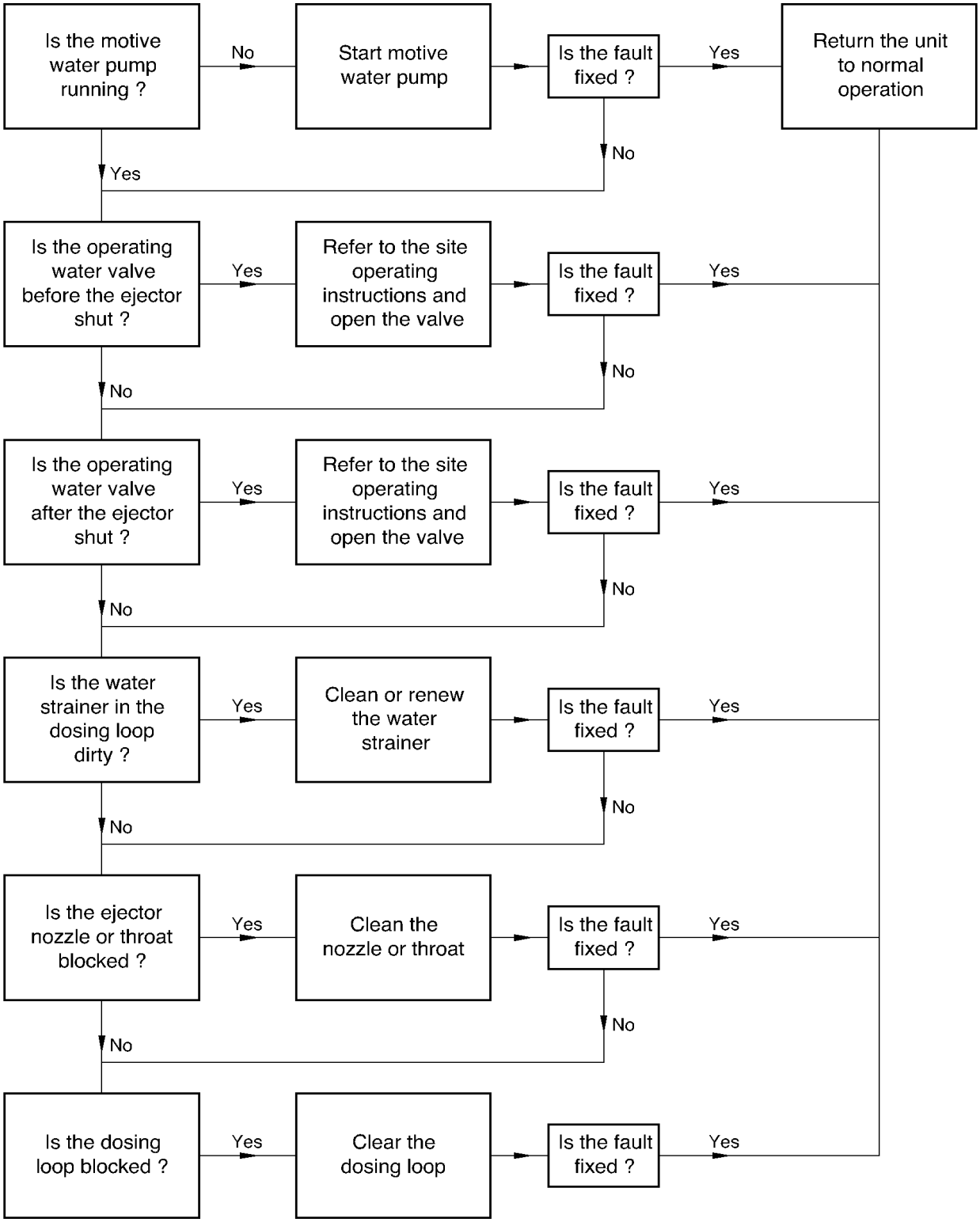

3.3 Gas Flow Through Meter Cannot Be Controlled

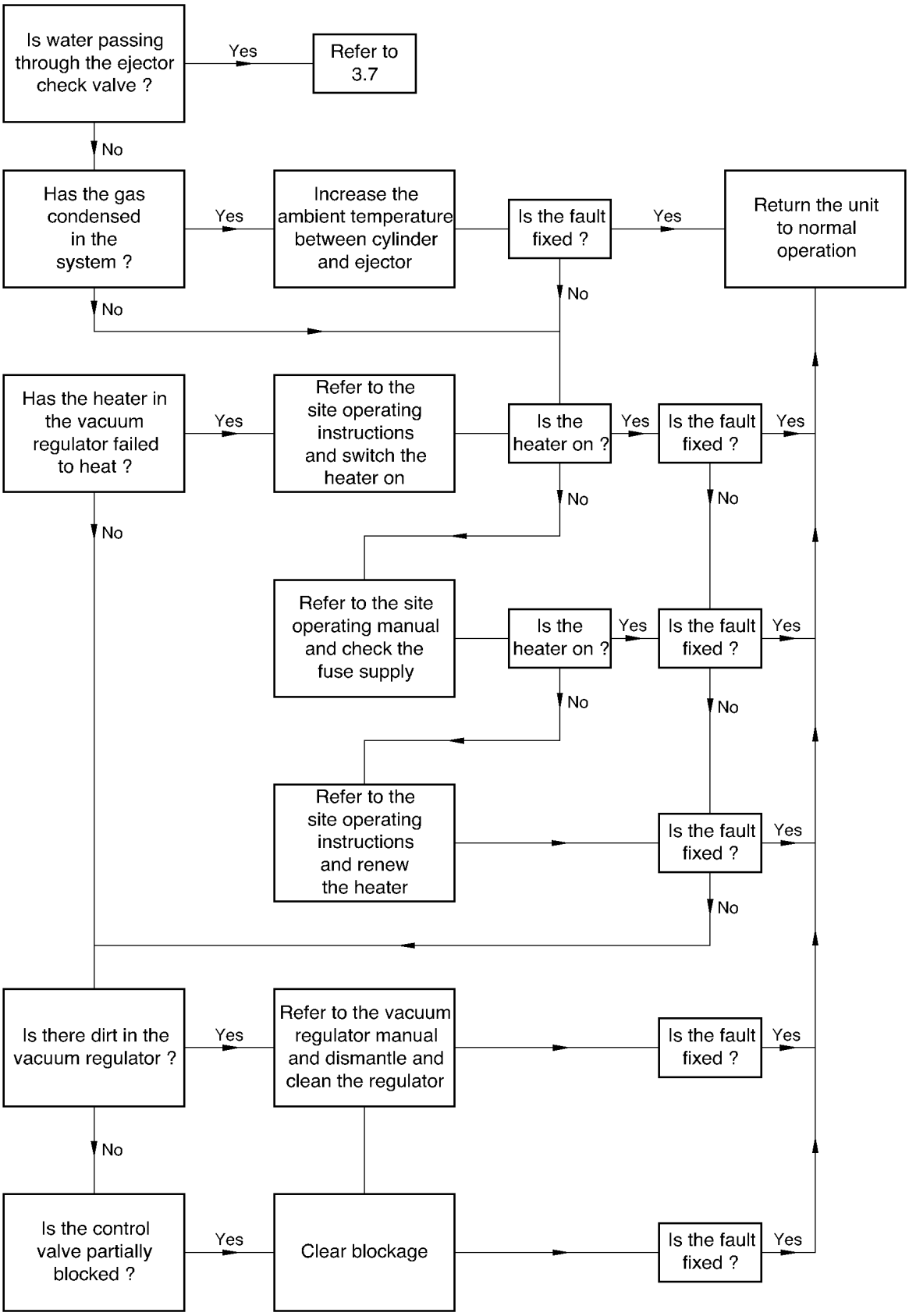

3.4 Flowmeter Indicates Flow when Gas is Turned Off

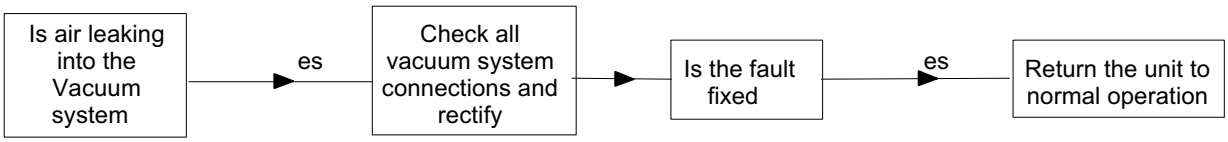

3.5 Gas Discharges from Vent of Portacel Vacuum Regulator

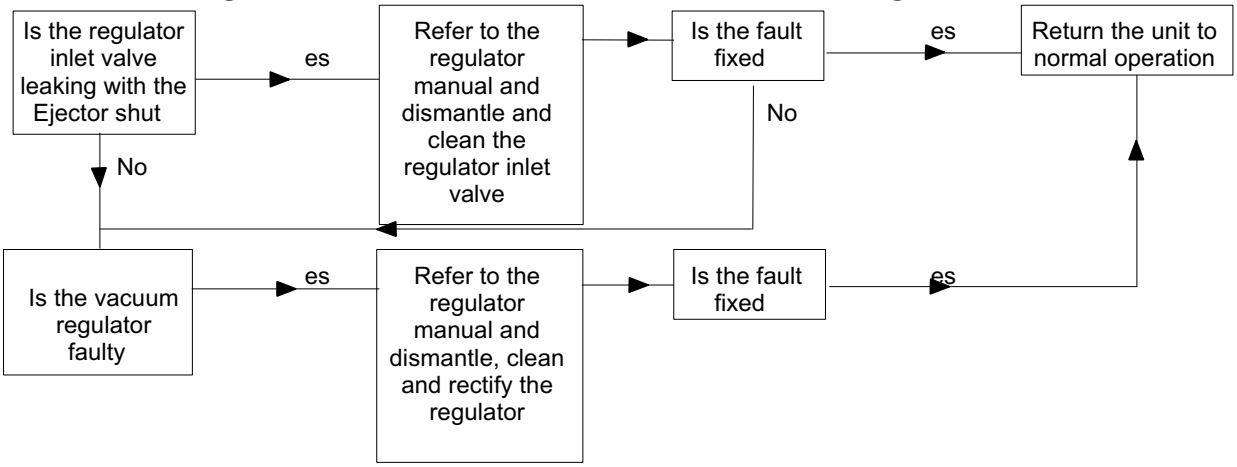

3.6 Flow Indicated when Ejector Operating Water Turned Off

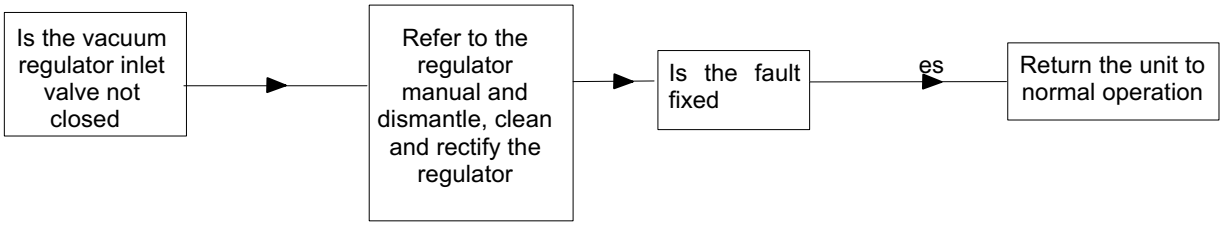

3.7 Water in the Flowmeter

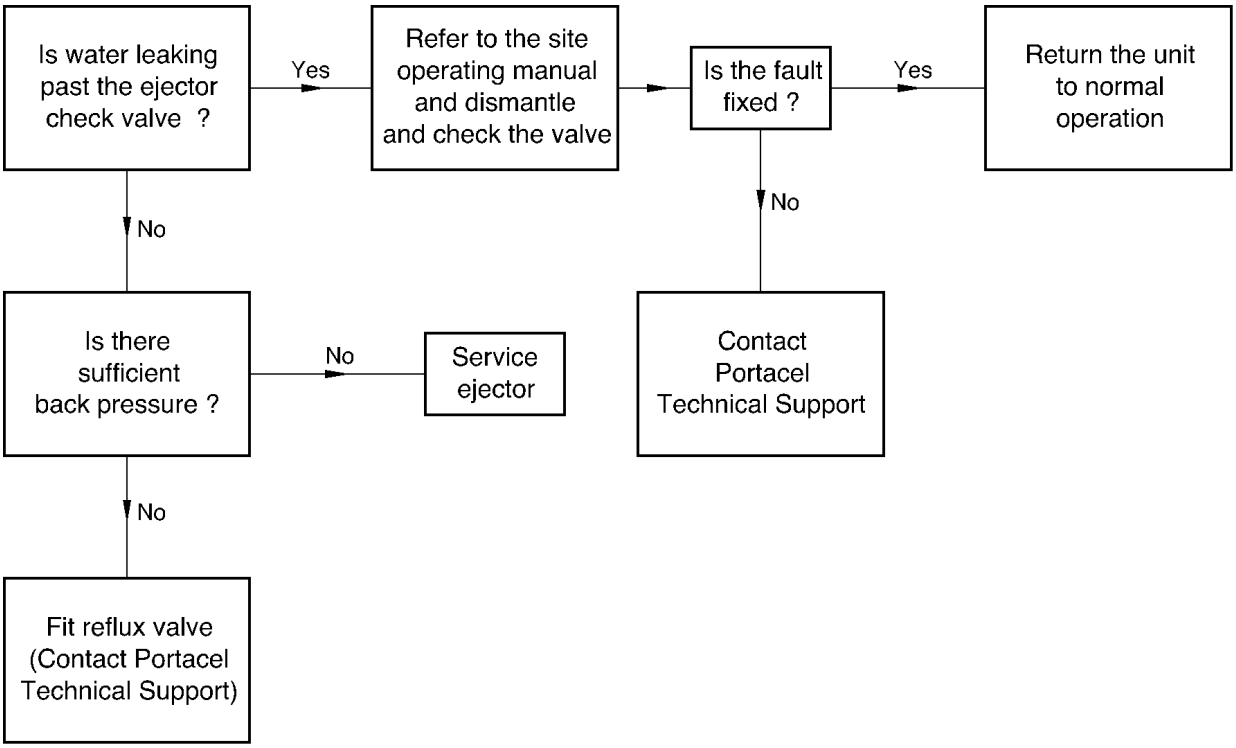

4. SERVICE OF MANUAL CHLORINATOR & SULPHONATOR

This section identifies the spares kits available to assist with the maintenance of the Thames 12 Dosing Unit used to dispense chlorine and sulphur dioxide gases. The information is given in the form of a listing of the items comprising the kit, together with drawings from where the items can be identified.

The drawings are in exploded assembly form that not only makes for ready identification of the items and where they are placed within the assembly, but also should assist a qualified technician to dismantle the assembly in order to gain access to the item.

WARNING!

Only trained and qualified Technicians should dismantle assemblies.

Table 5-1 Spares Kit Manual Type AAS1403

Fig/Item No.		Description	Part No.	Quantity
5-1 2	8	Orifice	OA30	1
5-1 2	11	O ring	OB52	1
		O ring	OB58	1
5-7 5-1 2	1 3	O ring	OB89	1
5-4 5-5 5-7	25 22 3	O ring	OB100	2
5-4 5-5 5-8	27 24 3 7	O ring	OB101	2
5-8	5	O ring	OB102	1
5-6	6	O ring	OB103	1
5-8	3 7	O ring	OB104	2
5-1 2	6	O ring	OB106	1
5-1 2	17	O ring	OB109	1
		O ring	OB114	2
5-8	3 7	O ring	OB125	2
		O ring	OB129	1
5-1 2	7	O ring	OB133	1
		O ring	OB139	2

Table 5-2 Spares Kit Manual Comprehensive Type AAS1404

Fig/Item No.		Description	Part No.	Quantity
		Diaphragm	DB32	1
5-3 5-1	8 23	Diaphragm	DB36	2
5-1	31	Filter	FA41	1
5-1 2	8	Orifice	OA30	1
		O ring	OB46	1
5-1 2	12	O ring	OB52	1
5-1	26	O ring	OB80	1
5-1 2	3	O ring	OB89	3
		O ring	OB92	1
5-4 5-5 5-7	25 22 3	O ring	OB100	5
5-4 5-5 5-8	27 24 3 7	O ring	OB101	3
5-8	5	O ring	OB102	1
5-6	6	O ring	OB103	1
5-8	3 7	O ring	OB104	2
5-1 2	6	O ring	OB106	1
5-1 2	17	O ring	OB109	1
		O ring	OB114	2
5-4 5-5	6 8 13 15 10 12	O ring	OB115	2
		O ring	OB116	1
		O ring	OB117	1
5-8	3 7	O ring	OB125	2
AVP FPC		O ring	OB125	2
		O ring	OB129	1
5-1 2	7	O ring	OB133	1
		O ring	OB139	2
		Seat	SD117	1

5. SERVICE OF AUTOMATIC CHLORINATOR & SULPHONATOR

This section identifies the spares kits available to assist with the maintenance of the Thames 12 Dosing Unit when automated and used with chlorine and sulphur dioxide. The information is given in the form of a listing of the items comprising the particular spares kits together with drawings on which the items can be identified.

The drawings are in exploded assembly form that not only makes for ready identification of the items and where they are within the assembly, but also should assist a competent technician to dismantle the assembly in order to gain access to the item.

WARNING!

Only trained and qualified Technicians should dismantle assemblies.

Table 5-3 Spares Kit Automatic Type AAS1411

Fig/Item No.		Description	Part No.	Quantity
5-3	8	Diaphragm	DB36	2
		Diaphragm	DB32	1
5-1	31	Filter	FA41	1
5-1 2	8	Orifice	OA30	1
		O ring	OB15	1
		O ring	OB46	1
5-1 2	12	O ring	OB52	1
5-1	26	O ring	OB80	1
5-1 2	3	O ring	OB89	3
		O ring	OB92	1
5-4 5-5 5-7	25 22 3	O ring	OB100	5
5-4 5-5 5-8	27 24 3 7	O ring	OB101	3
5-8	5	O ring	OB102	1
		O ring	OB103	1
5-8	3 7	O ring	OB104	2
5-1 2	6	O ring	OB106	1
5-1 2	17	O ring	OB109	1
		O ring	OB114	2

Fig/Item No.	Description	Part No.	Quantity
5-4 6 8 13 15 5-5 10 12	O ring	OB115	2
5-8 3 7	O ring	OB125	2
AVP FPC	O ring	OB126	4
5-1 7	O ring	OB133	1
AVP FPC	O ring	OB141	1
AVP FPC	O ring	OB142	2
	Seat	SD117	1

Table 5-4 Spares Kit Automatic without Differential Regulator Type AAS1491

Fig/Item No.	Description	Part No.	Quantity
5-3 8 5-1 24	Diaphragm	DB36	2
5-1 31	Filter	FA41	1
5-1 2 8	Orifice	OA30	1
	O ring	OB15	1
5-1 2 12	O ring	OB52	1
5-1 26	O ring	OB80	1
5-1 2 3	O ring	OB89	1
5-4 25 5-5 22 5-7 3	O ring	OB100	4
5-4 27 5-5 24 5-8 3 7	O ring	OB101	2
5-8 5	O ring	OB102	1
	O ring	OB103	3
5-8 3 7	O ring	OB104	2
	O ring	OB105	2
5-1 2 6	O ring	OB106	1
5-1 2 17	O ring	OB109	1
	O ring	OB114	2
5-4 6 8 13 15 5-5 10 12	O ring	OB115	2
AVP FPC	O ring	OB125	2
AVP FPC	O ring	OB126	4
5-1 2 7	O ring	OB133	1
	O ring	OB139	2
AVP FPC	O ring	OB141	1
AVP FPC	O ring	OB142	2

6. SERVICE OF MANUAL AMMONIATOR

This section identifies the spares kits available to assist with the maintenance of the Thames 12 Dosing Unit when used with ammonia gas. The information is given in the form of a listing of the items comprising the particular spares kits together with drawings on which the items can be identified.

The drawings are in exploded assembly form that not only makes for identification of the items and where they are within the assembly, but also should assist a competent Technician to dismantle the assembly in order to gain access to the item.

WARNING!

Only competent Technicians should dismantle assemblies.

Table 5-5 Spares Kit Manual Comprehensive Type AAS1448

Fig/Item No.	Description	Part No.	Quantity
	Diaphragm	DB38	1
	Diaphragm	DB41	1
5-1 2 8	Orifice	OA30	1
	O ring	OB503	1
	O ring	OB513	6
	O ring	OB514	4
	O ring	OB515	1
	O ring	OB516	3
	O ring	OB517	2
	O ring	OB519	1
	O ring	OB520	1
	O ring	OB522	1
	O ring	OB523	2
	O ring	OB524	2
	O ring	OB525	1
	O ring	OB526	1
	O ring	OB527	2
	O ring	OB536	2
	O ring	OB537	2
	O ring	OB538	2
	O ring	OB539	1
	Seat	SD118	1

7. SPARE PARTS

The following tables list the Portacel part numbers for the items shown in Figures 5-1 to 5-8 inclusive. Where an item is shown but not available as a spare item an NS will appear in the part number column. Items marked with an asterisk ( ) are part of a spares kit.

Table 5-6 Manual Control Valve with Vacuum Relief Valve Part Numbers (Fig. 5-1)

Fig/Item Number	Description	Part Number	
		Chlorinator/ Sulphonator	Ammoniator
5-1 1	Control Valve Assembly (complete)	AAS927	41376
5-1 2	Drive Shaft	SF44	SF44
5-1 3	O Ring	OB89	OB508
5-1 4	Screw	SC68	SC68
5-1 5	Valve Stem	See Table 5-7	See Table 5-7
5-1 6	O Ring	OB106	OB517
5-1 7	O Ring	OB133	OB539
5-1 8	Orifice	OA30	OA30
5-1 9	Spacer	SK98	SK98
5-1 10	O Ring	OB114	OB523
5-1 11	Plug	PK72	PK72
5-1 12	O Ring	OB52	OB503
5-1 13	Screw	SM131	SM131
5-1 14	Connector	CO27	CO27
5-1 15	Top Meter Body	BH200	BH200
5-1 16	Cap	CC127	CC127
5-1 17	O Ring	OB109	OB519
5-1 18	O Ring	OB129	OB530
5-1 19	Plug	PK78	PK78
5-1 20	Washer	WB77	WB77

Fig/Item Number	Description	Part Number	
		Chlorinator/ Sulphonator	Ammoniator
5-1 21	Screw	SM128	SM128
5-1 22	Spring	SL77	SL77
5-1 23	Diaphragm Screw	BM56	BM56
5-1 24	Diaphragm	DB36	DB41
5-1 25	Diaphragm Nut	NE126	NE126
5-1 26	O Ring	OB80	OB504
5-1 27	Spacer	SK97	SK97
5-1 28	Nut	NE117	NE117
5-1 29	Screw	SM130	SM130
5-1 30	Vacuum Relief Valve Cap	AAS679	AAS679
5-1 31	Filter	FA41	FA41

Table 5-7 Valve Stem Part Numbers (Figs. 5-1 and 5-2)

Fig/Item Number	Description	Capacity (Kg/h)	Valve Stem Part Number (marked on end Chlorinator, Sulphonator & Ammoniator
5-1 2 5	Valve Stem	0.05	SN135
5-1 2 5	Valve Stem	0.10	SN134
5-1 2 5	Valve Stem	0.25	SN118
5-1 2 5	Valve Stem	0.50	SN117
5-1 2 5	Valve Stem	1.00	SN116
5-1 2 5	Valve Stem	1.50	SN115
5-1 2 5	Valve Stem	2.00	SN95
5-1 2 5	Valve Stem	5.00	SN96
5-1 2 5	Valve Stem	7.00	SN133
5-1 2 5	Valve Stem	10.00	SN132
5-1 2 5	Valve Stem	12.0	SN97

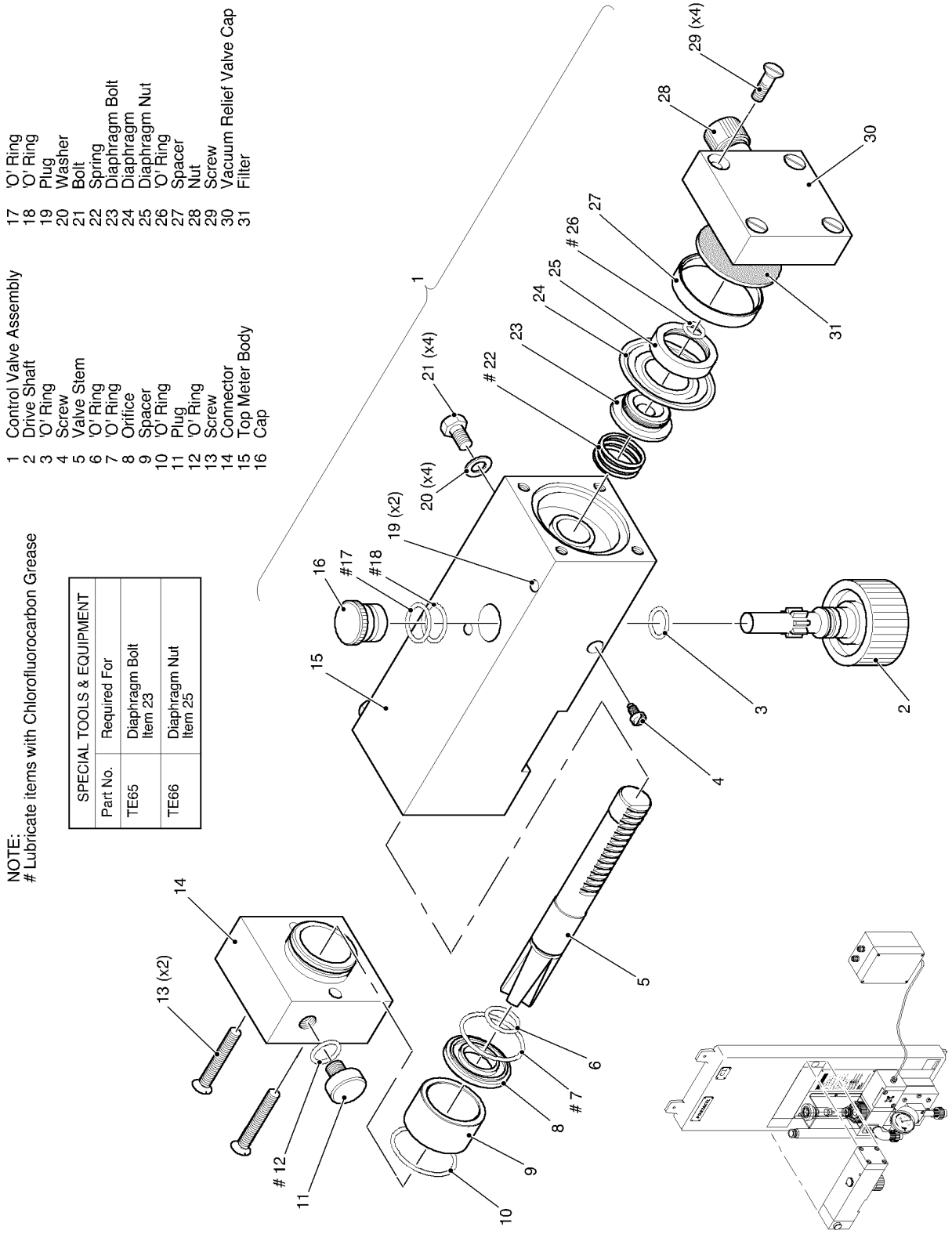

Fig. 5-1 Manual Control Valve AAS927 with Vacuum Relief Valve

Table 5-8 Manual Control Valve without Vacuum Relief Valve Part Numbers (Fig. 5-2)

Fig/Item Number	Description	Part Number	
		Chlorinator/ Sulphonator	Ammoniator
5-2 1	Control Valve Assembly (complete)	AAS1272	41378
5-2 2	Drive Shaft	SF44	SF44
5-2 3	O Ring	OB89	OB508
5-2 4	Screw	SC68	SC68
5-2 5	Valve Stem	See Table 5-7	See Table 5-7
5-2 6	O Ring	OB106	OB517
5-2 7	O Ring	OB133	OB539
5-2 8	Orifice	OA30	OA30
5-2 9	Spacer	SK98	SK98
5-2 10	O Ring	OB114	OB523
5-2 11	Plug	PK72	PK72
5-2 12	O Ring	OB52	OB503
5-2 13	Screw	SM131	SM131
5-2 14	Connector	CO27	CO27
5-2 15	Top Meter Body	BH200	BH200
5-2 16	Cap	CC127	CC127
5-2 17	O Ring	OB109	OB519
5-2 18	O Ring	OB129	OB530
5-2 19	Plug (Black)	PK78	PK78
5-2 20	Washer	WB77	WB77
5-2 21	Screw	SM128	SM128
5-2 22	O Ring	OB58	OB542
5-2 23	Cap	CC135	CC135
5-2 24	Screw	SM25	SM25

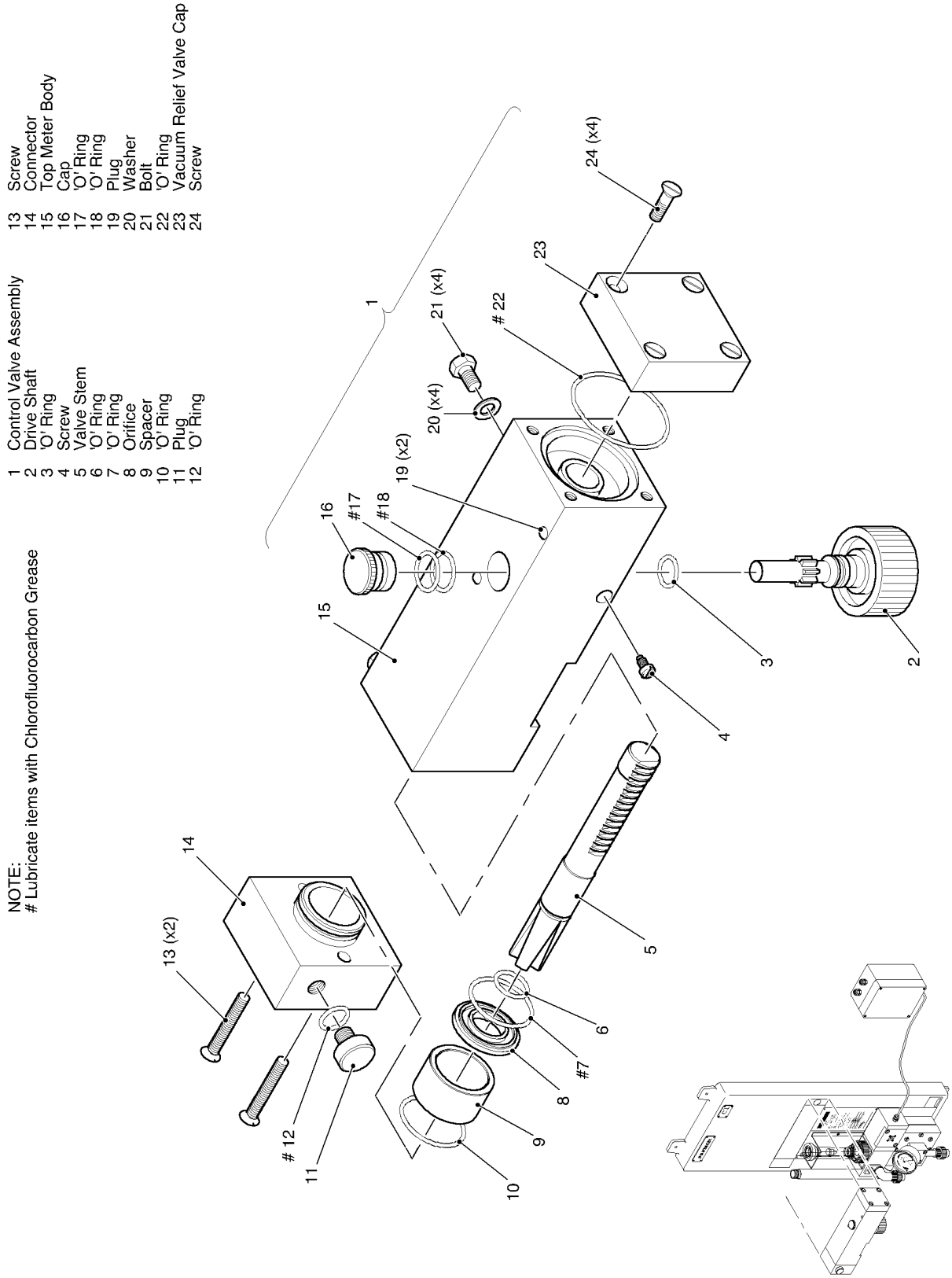

Fig. 5-2 Manual Control Valve AAS1272 without Vacuum Relief Valve

Table 5-9 Vacuum Alarm Switch for units with Differential Regulator Part Numbers (Fig. 5-3)

Fig/Item Number	Description	Part Number	
		Chlorinator/ Sulphonator AAS1269	Ammoniator (40241)
5-3 1	Adjustment Screw (Low)	SC69	SC69
5-3 2	Screw	SM129	SM129
5-3 3	Adjustment Screw (High)	SC70	SC70
5-3 4	Cap	CC133	CC133
5-3 5	Switch Unit	SS43	SS43
5-3 6	Spacer	SK121	SK121
5-3 7	Diaphragm Nut	NE126	NE126
5-3 8	Diaphragm	DB36	DB41
5-3 9	Diaphragm Bolt	SC62	SC62
5-3 10	Spring	SL78	SL78
5-3 11	Body	BH217	BH217
5-3 12	Washer	WB77	WB77
5-3 13	Screw	SM128	SM128
5-3 14	Gland	GD34	GD34

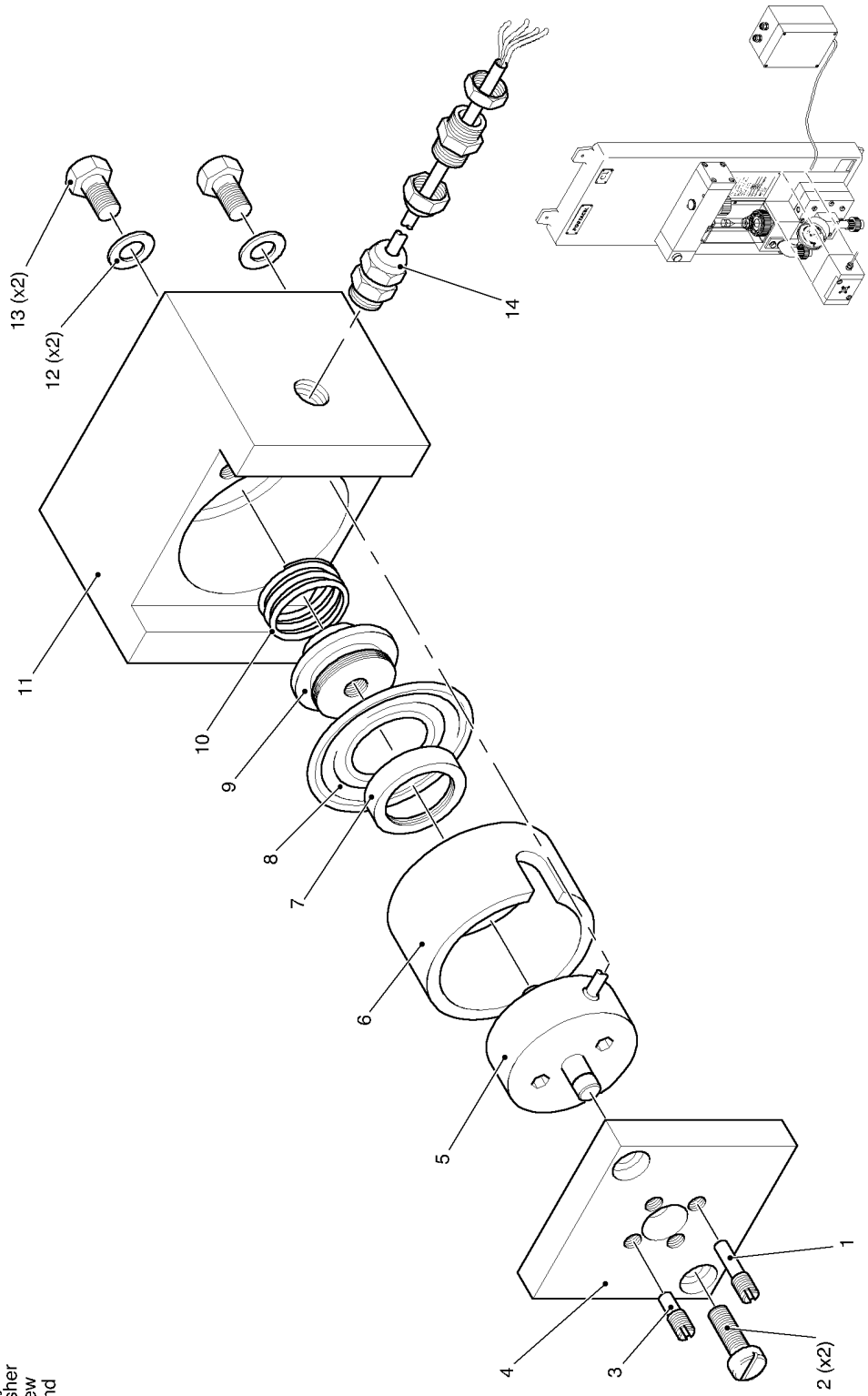

SPECIAL TOOLS & EQUIPMENT	
Part No.	Required For
TE65	Diaphragm Bolt Item 9
TE66	Diaphragm Nut Item 7

1 Adjustment Screw (low)
2 Screw
3 Adjustment Screw (high)
4 Cap
5 Switch Unit
6 Spacer
7 Diaphragm Nut
8 Diaphragm
9 Diaphragm Bolt
10 Spring
11 Body
12 Washer
13 Screw
14 Gland

Fig. 5-3 Vacuum Alarm Switch AAS1269 (for units with a Differential Regulator)

Table 5-10 Differential Regulator for units with Vacuum Alarm Part Numbers (Fig. 5-4)

Fig/Item Number	Description	Part Number	
		Chlorinator/ Sulphonator AAS1259	Ammoniator 41380
5-4 1	Outlet Block Assembly	AAS1258	AAS1258
5-4 2	Screw	SM167	SM167
5-4 3	Screw	SM166	SM166
5-4 4	Vacuum Gauge	GB44	GB44
5-4 5	Valve	VA56	VA56
5-4 6	O Ring	OB115	OB524
5-4 7	Connector	CO29	CO29
5-4 8	O Ring	OB115	OB524
5-4 9	Seat	SD117	40245
5-4 10	Seat	SD116	SD116
5-4 11	Diaphragm Plate	PF96	PF96
5-4 12	Ring	RB38	RB38
5-4 13	O Ring	OB115	OB524
5-4 14	Connector	CO29	CO29
5-4 15	O Ring	OB115	OB524
5-4 16	Washer	WB77	WB77
5-4 17	Screw	SM128	SM128
5-4 18	Nut	ND70	ND70
5-4 19	Back Block	BH219	BH219
5-4 20	Diaphragm	DB32	DB32
5-4 21	O Ring	OB92	OB510
5-4 22	O Ring	OB46	OB507
5-4 23	Spring	SL83	SL83
5-4 24	Front Body Assembly	AAS1274	ASS1274

Fig/Item Number	Description	Part Number	
		Chlorinator/ Sulphonator AAS1259	Ammoniator 41380
5-4 25	O Ring	OB100	OB519
5-4 26	Screw	SM53	SM53
5-4 27	O Ring	OB101	OB514

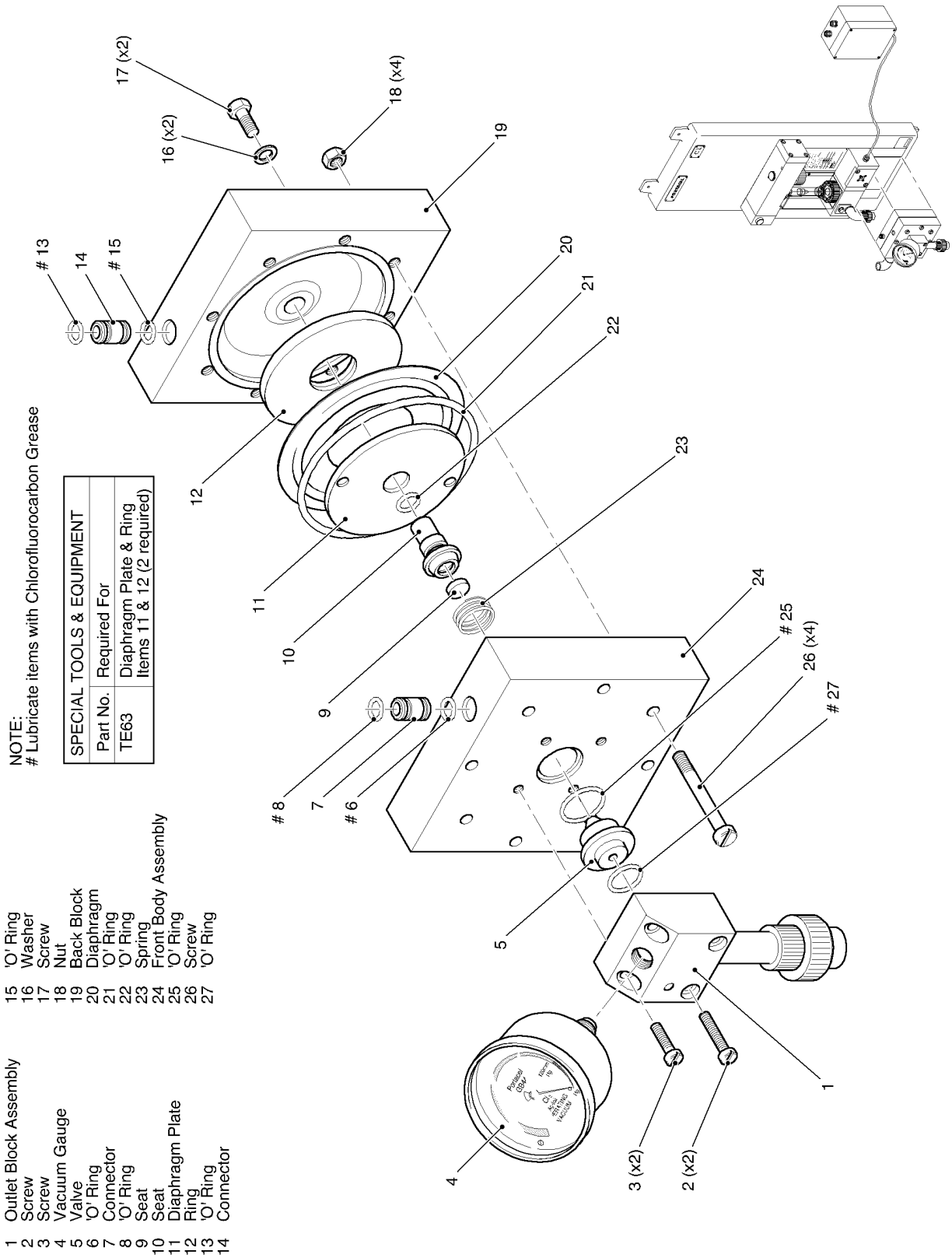

Fig. 5-4 Differential Regulator AAS1259 (for units with Vacuum Alarm)

Table 5-11 Differential Regulator for units without Vacuum Alarm Part Numbers (Fig. 5-5)

Fig/Item Number	Description	Part Number	
		Chlorinator/ Sulphonator AAS1286	Ammoniator 41381
5-5 1	Outlet Block Assembly	AAS1258	AAS1258
5-5 2	Screw	SM167	SM167
5-5 3	Screw	SM166	SM166
5-5 4	Vacuum Gauge	GB44	GB44
5-5 5	Valve	VA56	VA56
5-5 6	Seat	SD117	40245
5-5 7	Seat	SD116	SD116
5-5 8	Diaphragm Plate	PF96	PF96
5-5 9	Ring	RB38	RB38
5-5 10	O Ring	OB115	OB524
5-5 11	Connector	CO29	CO29
5-5 12	O Ring	OB115	OB524
5-5 13	Washer	WB77	WB77
5-5 14	Screw	SM128	SM128
5-5 15	Nut	ND70	ND70
5-5 16	Back Block	BH219	BH219
5-5 17	Diaphragm	DB32	DB32
5-5 18	O Ring	OB92	OB510
5-5 19	O Ring	OB46	OB507
5-5 20	Spring	SL83	SL83
5-5 21	Front Body Assembly	AAS1274	ASS1274
5-5 22	O Ring	OB100	OB513
5-5 23	Screw	SM53	SM53
5-5 24	O Ring	OB101	OB514

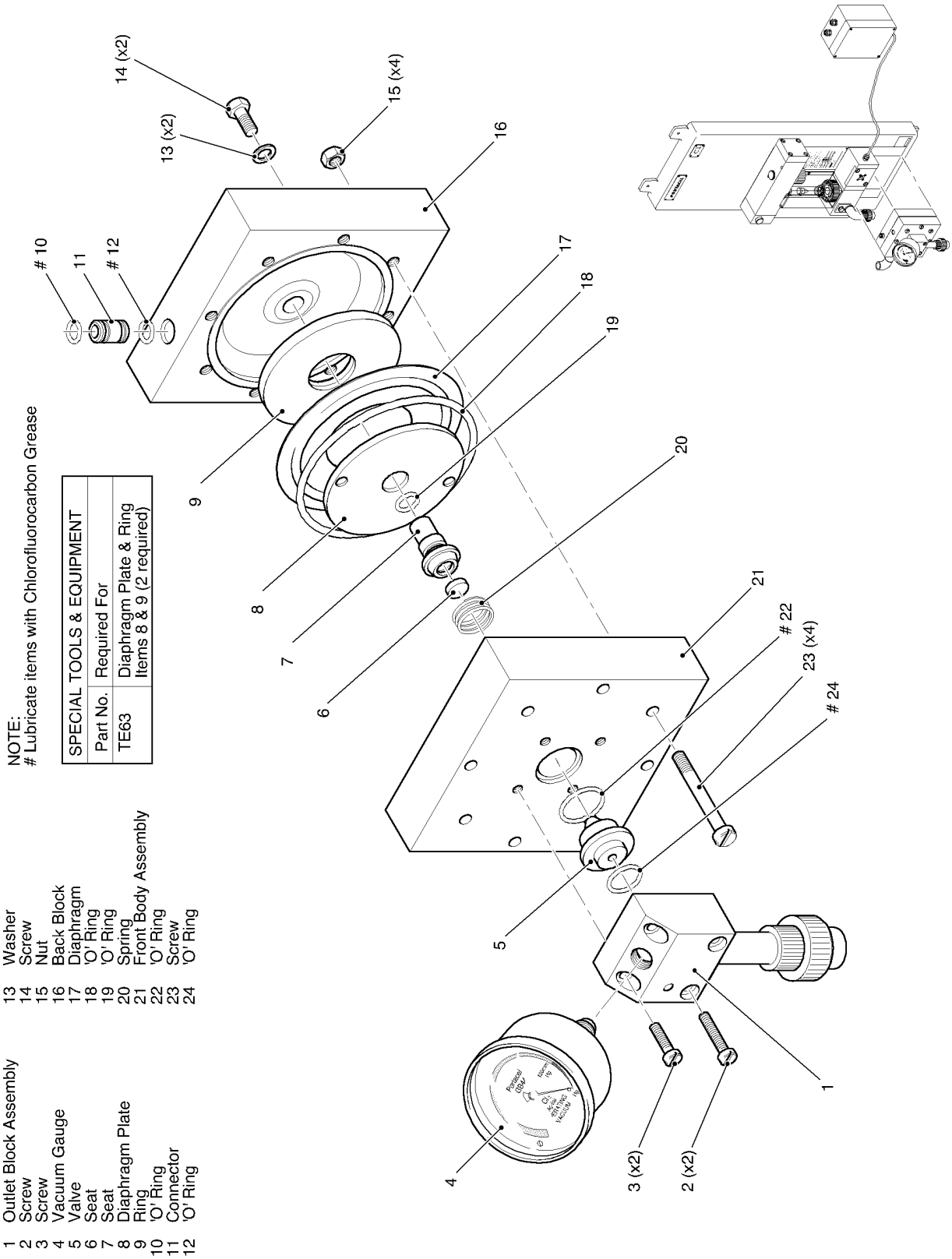

Fig. 5-5 Differential Regulator AAS1286 (for units without Vacuum Alarm)

Table 5-12 Bottom Meter Block Part Numbers (Fig. 5-6)

Fig/Item Number	Description	Part Number	
		Chlorinator/ Sulphonator AAS1260	Ammoniator 40237
5-6 1	Screw	SM128	SM128
5-6 2	Washer	WB77	WB77
5-6 3	Retaining Plate	RE84	RE84
5-6 4	Lower Meter Block	BH216	BH216
5-6 5	O Ring	OB114	OB523
5-6 6	O Ring	OB103	OB516
5-6 7	Meter Connector	CO30	CO30
5-6 8	Screw	SM128	SM128
5-6 9	Washer	WB77	WB77
5-6 10	Ring	RB46	RB46

Items not included in the assembly structure.

1 Screw
2 Washer
3 Retaining Plate
4 Lower Meter Block
5 'O' Ring
6 'O' Ring
7 Meter Connection
8 Screw
9 Washer
10 Ring

NOTES:

* Items marked are part of a spares kit

Lubricate items with Chlorofluorocarbon Grease

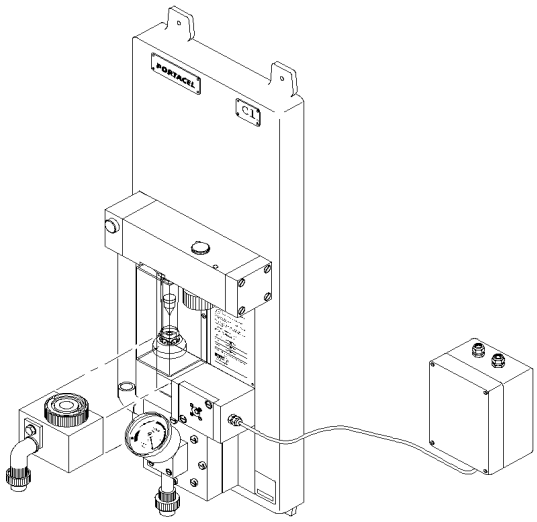

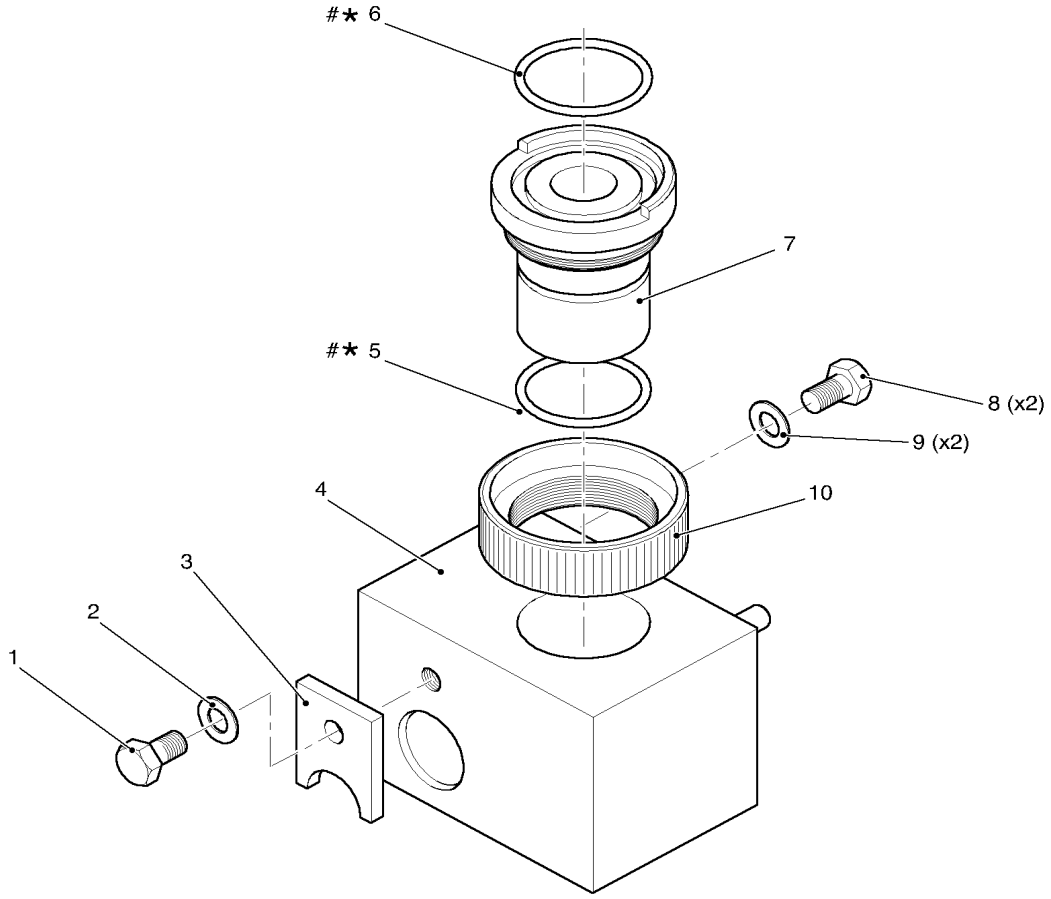

Fig. 5-6 Bottom Meter Block AAS1260

Table 5-13 Bypass Tube Part Numbers (Fig. 5-7)

Fig/Item Number	Description	Part Number	
		Chlorinator/ Sulphonator	Ammoniator
5-7 1	O Ring	OB89	OB513
5-7 2	Pipe	PB79	PB79
5-7 3	O Ring	OB100	OB513

1 'O' Ring
2 Pipe
3 'O' Ring

NOTE:

Lubricate items with Chlorofluorocarbon Grease

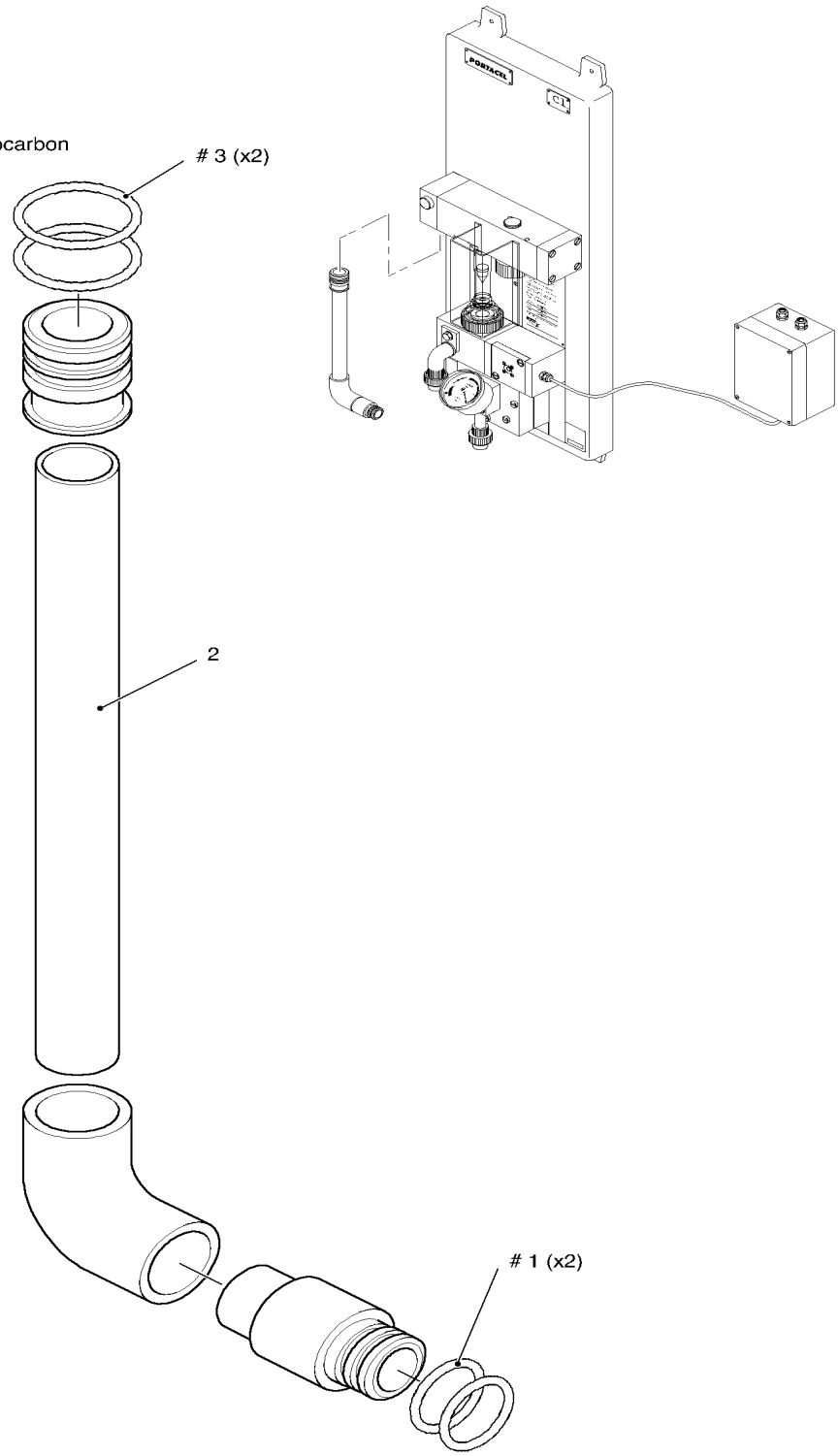

Fig. 5-7 Bypass Tube

Table 5-14 Flowmeter Tube 12 Kg/h Cl_2/SO_2 and 6.0 Kg/h NH_3 Part Numbers (Fig. 5-8)

Fig/Item Number	Description	Part Number	
		Chlorinator/ Sulphonator AAS720	Ammoniator AAS1440
5-8 1	Short Cover	CP108	CP108
5-8 2	Screw	SM54	SM54
5-8 3	O Ring	OB125	OB527
5-8 4	Adaptor	FC245	FC245
5-8 5	O Ring	OB102	OB515
5-8 6	Meter Tube	TK98	TK168
5-8 7	O Ring	OB125	OB527
5-8 8	Adaptor	FC245	FC245
5-8 9	O Ring	OB102	OB515

Items not included in the assembly structure

Table 5-15 Flowmeter Tube 10 Kg/h Cl_2 and SO_2 and 5 Kg/h NH_3 Part Numbers (Fig. 5-8)

Fig/Item Number	Description	Part Number	
		Chlorinator/ Sulphonator AAS1277	Ammoniator AAS1441
5-8 1	Short Cover	CP108	CP108
5-8 2	Screw	SM54	SM54
5-8 3	O Ring	OB125	OB527
5-8 4	Adaptor	FC245	FC245
5-8 5	O Ring	OB102	OB515
5-8 6	Meter Tube	TK147	TK167
5-8 7	O Ring	OB125	OB527
5-8 8	Adaptor	FC245	FC245
5-8 9	O Ring	OB102	OB515

Table 5-16 Flowmeter Tube 5 Kg/h Cl_2/SO_2 and 2.5 Kg/h NH_3 Part Numbers (Fig. 5-8)

Fig/Item Number	Description	Part Number	
		Chlorinator/ Sulphonator AAS721	Ammoniator AAS1443
5-8 1	Short Cover	CP108	CP108
5-8 2	Screw	SM54	SM54
5-8 3	O Ring	OB125	OB527
5-8 4	Adaptor	FC245	FC245
5-8 5	O Ring	OB102	OB515
5-8 6	Meter Tube	TK97	TK165
5-8 7	O Ring	OB125	OB527
5-8 8	Adaptor	FC245	FC245
5-8 9	O Ring	OB102	OB515

Items not included in the assembly structures

Table 5-17 Flowmeter Tube 7 Kg/h Cl_2/SO_2 and 3.5 Kg/h NH_3 Part Numbers (Fig. 5-8)

Fig/Item Number	Description	Part Number	
		Chlorinator/ Sulphonator AAS1278	Ammoniator AAS1442
5-8 1	Short Cover	CP108	CP108
5-8 2	Screw	SM54	SM54
5-8 3	O Ring	OB125	OB527
5-8 4	Adaptor	FC245	FC245
5-8 5	O Ring	OB102	OB515
5-8 6	Meter Tube	TK145	TK166
5-8 7	O Ring	OB125	OB527
5-8 8	Adaptor	FC245	FC245
5-8 9	O Ring	OB102	OB515

Items not included in the assembly structures

Table 5-18 Flowmeter Tube 2 Kg/h Cl_2/SO_2 and 1 Kg/h NH_3 Part Numbers (Fig. 5-8)

Fig/Item Number	Description	Part Number	
		Chlorinator/ Sulphonator AAS722	Ammoniator AAS1444
5-8 1	Short Cover	CP108	CP108
5-8 2	Screw	SM54	SM54
5-8 3	O Ring	OB101	OB514
5-8 4	Adaptor	FC241	FC241
5-8 5	O Ring	OB102	OB515
5-8 6	Meter Tube	TK90	TK164
5-8 7	O Ring	OB101	OB514
5-8 8	Adaptor	FC241	FC241
5-8 9	O Ring	OB102	OB515

Items not included in the assembly structure

Table 5-19 Flowmeter Tube 1 Kg/h Cl_2/SO_2 and 500 g/h NH_3 Part Numbers (Fig. 5-8)

Fig/Item Number	Description	Part Number	
		Chlorinator/ Sulphonator AAS723	Ammoniator AAS1445
5-8 1	Short Cover	CP108	CP108
5-8 2	Screw	SM54	SM54
5-8 3	O Ring	OB101	OB514
5-8 4	Adaptor	FC241	FC241
5-8 5	O Ring	OB102	OB515
5-8 6	Meter Tube	TK89	TK163
5-8 7	O Ring	OB101	OB514
5-8 8	Adaptor	FC241	FC241
5-8 9	O Ring	OB102	OB515

Items not included in the assembly structure

Table 5-20 Flowmeter Tube 500 g/h Cl_2/SO_2 and 250 g/h NH_3 Part Numbers (Fig. 5-8)

Fig/Item Number	Description	Part Number	
		Chlorinator/ Sulphonator AAS724	Ammoniator AAS1446
5-8 1	Short Cover	CP108	CP108
5-8 2	Screw	SM54	SM54
5-8 3	O Ring	OB101	OB514
5-8 4	Adaptor	FC241	FC241
5-8 5	O Ring	OB102	OB515
5-8 6	Meter Tube	TK88	TK162
5-8 7	O Ring	OB101	OB514
5-8 8	Adaptor	FC241	FC241
5-8 9	O Ring	OB102	OB515

Items not included in the assembly structure

Table 5-21 Flowmeter Tube 250 g/h Cl_2/SO_2 and 125 g/h NH_3 Part Numbers (Fig. 5-8)

Fig/Item Number	Description	Part Number	
		Chlorinator/ Sulphonator AAS725	Ammoniator 40255
5-8 1	Short Cover	CP109	CP109
5-8 2	Screw	SM54	SM54
5-8 3	O Ring	OB104	OB538
5-8 4	Adaptor	FC240	FC240
5-8 5	O Ring	OB102	OB515
5-8 6	Meter Tube	TK99	40256
5-8 7	O Ring	OB104	OB538
5-8 8	Adaptor	FC240	FC240
5-8 9	O Ring	OB102	OB515

Items not included in the assembly structure

Table 5-22 Flowmeter Tube 100 g/h Cl_2/SO_2 and 50 g/h NH_3 Part Numbers (Fig. 5-8)

Fig/Item Number	Description	Part Number	
		Chlorinator/ Sulphonator AAS1279	Ammoniator 40251
5-8 1	Short Cover	CP109	CP109
5-8 2	Screw	SM54	SM54
5-8 3	O Ring	OB104	OB538
5-8 4	Adaptor	FC240	FC240
5-8 5	O Ring	OB102	OB515
5-8 6	Meter Tube	TK141	40252
5-8 7	O Ring	OB104	OB538
5-8 8	Adaptor	FC240	FC240
5-8 9	O Ring	OB102	OB515

Items not included in the assembly structure

Table 5-23 Flowmeter Tube 50 g/h Cl_2/SO_2 and 25 g/h NH_3 Part Numbers (Fig. 5-8)

Fig/Item Number	Description	Part Number	
		Chlorinator/ Sulphonator AAS1279	Ammoniator 40253
5-8 1	Short Cover	CP109	CP108
5-8 2	Screw	SM54	SM54
5-8 3	O Ring	OB104	OB538
5-8 4	Adaptor	FC240	FC240
5-8 5	O Ring	OB102	OB515
5-8 6	Meter Tube	TK142	40254
5-8 7	O Ring	OB104	OB538
5-8 8	Adaptor	FC240	FC240
5-8 9	O Ring	OB102	OB515

Items not included in the assembly structure

1 Short Cover
2 Screw
3 'O' Ring
4 Adaptor
5 'O' Ring
6 Meter Tube
7 'O' Ring
8 Adaptor
9 'O' Ring

NOTE:

* Items marked are part of a spares kit

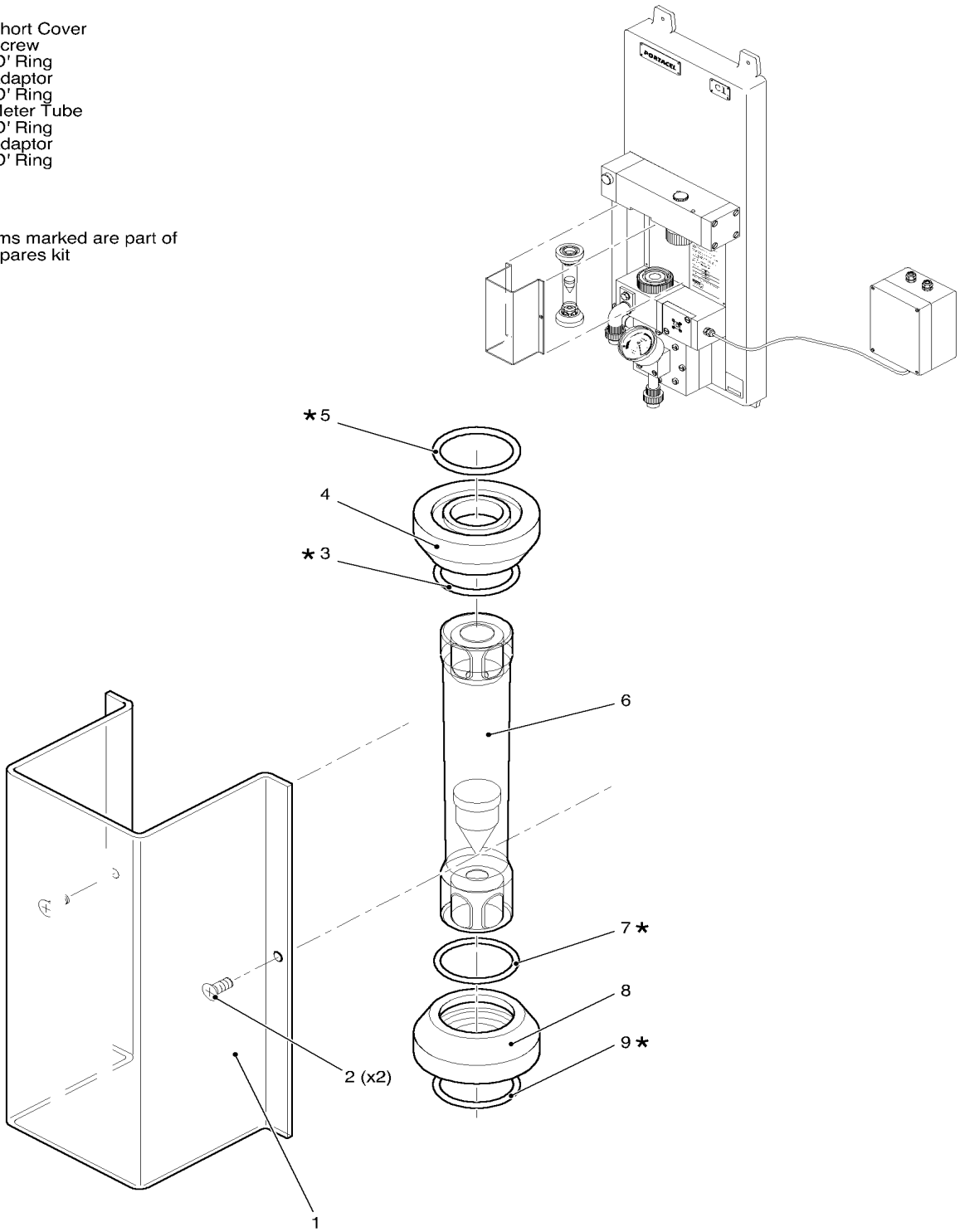

Fig. 5-8 Flowmeter Tube

Chapter 6

Options

Contents

Para.		Page
	INTRODUCTION	6.3
1.	GENERAL	6.5
2.	OPTION 1: AUTOMATIC VALVE POSITIONER (AVP)	6.5
3.	OPTION 2: FLOW PROPORTIONAL CONTROLLER (FPC)	6.5
4.	INSTALLATION OF AVP AND FPC CONTROLLERS	6.6
5.	REMOVAL OF AVP AND FPC CONTROLLERS	6.7

ILLUSTRATIONS

Fig. No.		Page
6-1	Typical Installation of AVP and FPC Controllers	6.11

TABLES

Table No.		Page
6-1	Typical Installation of AVP and FPC Controllers Part Numbers	6.9

INTRODUCTION

This Chapter contains the additional information on optional equipment supplied with the Thames 12 Dosing Unit. All information in the following sections is unique to the options supplied. Information already supplied in the Thames 12 Dosing Unit Operating and Maintenance Manual is not repeated in this Chapter.

1. GENERAL

A vacuum relief valve can be provided as an option to protect the system should the vacuum within the system become excessive. On capacities up to 40 Kg h an optional differential regulator can be provided in order to maintain a constant vacuum across the control valve and allow for pressure fluctuations at the ejector. To monitor the chlorinator, an optional vacuum switch and visual button can be provided to indicate high or zero vacuum status.

2. OPTION 1: AUTOMATIC VALVE POSITIONER (AVP)

The chlorinator is adapted to automatic control by the addition of an automatic valve positioner. A water flow signal and residual signal are used to set a gas flow rate by positioning a control valve.

The AVP controller is used to vary the dose of disinfecting gas in response to the two analogue signals. An input signal from a flowmeter is used to position a control valve and set a gas flow rate. This rate is precisely adjusted by measuring the residual levels of the disinfecting gas in the treated water. The system allows a time lag between the two inputs to ensure that a change in gas flow has time to register at the point of analysis.

Output terminals are provided so that valve position indication is possible.

For a detailed description of the operation of the AVP, refer to the Operating and Maintenance Manual Part No. 41313.

3. OPTION 2: FLOW PROPORTIONAL CONTROLLER (FPC)

The chlorinator is also adapted to automatic control by the addition of an automatic flow proportional controller. A water flow signal determines a proportional gas flow rate that is set by a control valve.

The FPC is used to vary the dose of disinfecting gas in response to a single analogue signal. This signal usually comes from a flow meter, with gas flow being adjusted in proportion to water flow. The controller has the facility for proportional dosing over a range of 4:1 and 1:4. Gas flow is adjusted by a servo motor driving the control valve in the dosing unit. The valve position then provides an output signal that can give a direct indication of gas flow. Remote indication of controller status is possible, in automatic mode, using a relay contact provided.

For a detailed description of the operation of the FPC, refer to the Operating and Maintenance Manual Part No. 41314.

4. INSTALLATION OF AVP AND FPC CONTROLLERS

The installation procedure for the AVP and FPC controllers is identical for both units.

(1) If changing from a manual doser, remove the manual drive shaft, cap and associated O rings, as described in Chapter 5 Section 2.1.1 of this O & M Manual.

(2) Install the controller on the doser by slotting the unit over the location studs.

(3) Using a screwdriver, insert the two screws securing the controller to the panel.

(4) Fit all new O ring seals.

(5) Align the control valve stem gearing with the control knob gearing by:

  (a) Pushing the control valve stem into the control valve body until the stem protrudes from the face of the body by approximately 1.5 mm.

  (b) Aligning the yellow dot on the control knob with the line on the block.

  (c) Inserting the control knob into the gearing on the control valve stem.

(6) Push the by-pass tube into position to make sure that the orifice is correctly seated.

(7) Replace the two screws securing the by-pass tube to the control valve body.

(8) Using a screwdriver, insert the single screw securing the drive shaft retained in the removal procedure.

(9) Place the motor gearbox into position by gently aligning it over the location studs.

(10) Using an 8 mm ring spanner, secure the motor gearbox to the controller with the two nuts and washers retained in the removal procedure (Step 11).

(11) Reconnect the electrical plug connecting the motor gearbox to the controller.

(12) Replace the two grub screws retained in the removal procedure (Step 7) using the 2.5 mm Allen key.

(13) Align the clutch operating shaft with the access hole in the controller case, and push into the hole until the seat is located correctly.

(14) Align the spring and operating lever in the correct positions and tighten the operating lever collar using the 1.5 mm Allen key.

(15) Replace the securing shim and the clutch operating knob to the shaft and secure with the nut and washer retained in the removal procedure (Step 15).

(16) Replace the centre cap to the knob retained in the removal procedure (Step 13).

(17) Close and secure the controller panel and tighten the four securing screws.

(18) Seal all vacuum pipework disturbed during the removal procedure.

(19) Carry out a leak check (see Chapter 3 of this O & M Manual).

(20) Carry out a calibration procedure (refer to the specific AVP or FPC O & M Manual).

5. REMOVAL OF AVP AND FPC CONTROLLERS

The removal of the AVP and the FPC controllers is identical for both units.

(1) Referring to the site operating instructions, isolate the gas supply to the vacuum regulator supplying the unit.

(2) Allow the unit to operate under vacuum (ie with the ejector running) to draw any remaining gas through the pipework.

(3) With the ejector running, open the pipework on the vacuum side of the vacuum regulator, and as close to the regulator as possible, to purge the pipework of gas.

(4) Switch off the ejector.

(5) Using a screwdriver, remove and retain the two screws retaining the by-pass tube to the control valve then pull the by-pass tube from the seating in the control valve.

(6) Loosen the four screws of the controller front panel then pull the panel forwards and hinge open.

(7) Using a 2.5 mm Allen key remove and retain the two grub screws securing the drive shaft to the motor gearbox.

CAUTION!
To prevent damage to the motor gearbox and drive shaft assembly, ensure that the clutch is operated whilst turning the control knob to align the two grub screws.

(8) Using a screwdriver, remove and retain the single securing screw retaining the drive shaft to the control valve.

(9) Remove the drive shaft.

(10) Withdraw the control valve stem, control valve operating orifice and seals from the control valve.

(11) Using an 8 mm ring spanner, remove and retain the two nuts and washers securing the motor gearbox to the control valve.

(12) Disconnect the electrical plug connecting the motor gearbox to the controller.

(13) Gently remove and retain the centre cap of the motor gearbox clutch knob by levering it out.

(14) Using a 9 mm ring spanner, remove and retain the nut and washer securing the knob to the shaft.

(15) Remove and retain the knob and the securing shim from the shaft.

(16) Using a 1.5 mm Allen key, loosen the clutch operating lever on the shaft.

(17) Push the operating lever through the controller case while making sure that the spring and lever slide down the shaft. Retain the spring and lever slide.

(18) Remove the motor gearbox from the controller by gently separating the assembly from the control valve shaft.

(19) Unscrew the two screws securing the controller unit to the panel.

(20) Remove the controller from the doser unit by lifting the unit clear of the locating studs.

(21) If reverting to a manual doser, install the manual drive shaft as described in Chapter 5 Section 2.1.2 of this O & M Manual.

Table 6-1 Typical Installation of AVP and FPC Controllers Part Numbers

Fig/Item No.		Description	Part No.	Quantity
6-1	1	Drive shaft	AAS926	1
6-1	2	Grub screw	SM159	2
6-1	3	O ring	OB89	1
6-1	4	Screw	SC68	1
6-1	5	Valve stem	See Table	1
6-1	6	O ring	Ob106	1
6-1	7	O ring	OB133	1
6-1	8	Orifice	OA30	1
6-1	9	Spacer	SK98	1
6-1	10	O ring	OB114	1
6-1	11	Screw	SM131	2
6-1	12	Connector	CO27	1
6-1	13	Screw	NS	4
6-1	14	Front panel	NS	1
6-1	15	Terminal box	NS	1
6-1	16	Motor gearbox assembly	AAS917	1
6-1	17	Nut	ND69	2
6-1	18	Washer	WB59	2
6-1	19	Grub screw	SM137	1
6-1	20	Stud	SR34	2
6-1	21	Lever	LA3	1
6-1	22	Spring	SL80	1
6-1	23	Shaft	SF42	1
6-1	24	Retaining pin	RE87	1
6-1	25	Knob	KB28	1
6-1	26	O ring	OB15	1
6-1	27	Cap	CC115	1
6-1	28	Control valve body	BH200	1
6-1	29	O ring	OB141	1

NOTE:
Lubricate items with Chlorofluorocarbon Grease

1	Drive shaft	16	Motor Gearbox assy
2	Grub screw	17	Nut
3	"O" Ring	18	Washer
4	Screw	19	Grub Screw
5	Valve Stem	20	Stud
6	"O" Ring	21	Lever
7	"O" Ring	22	Spring
8	Orifice	23	Shaft
9	Spacer	24	Retaining Pin
10	"O" Ring	25	Knob
11	Screw	26	"O" Ring
12	Connector	27	Cap
13	Screw	28	Control Valve Body
14	Front Panel	29	"O" Ring
15	Terminal Box		

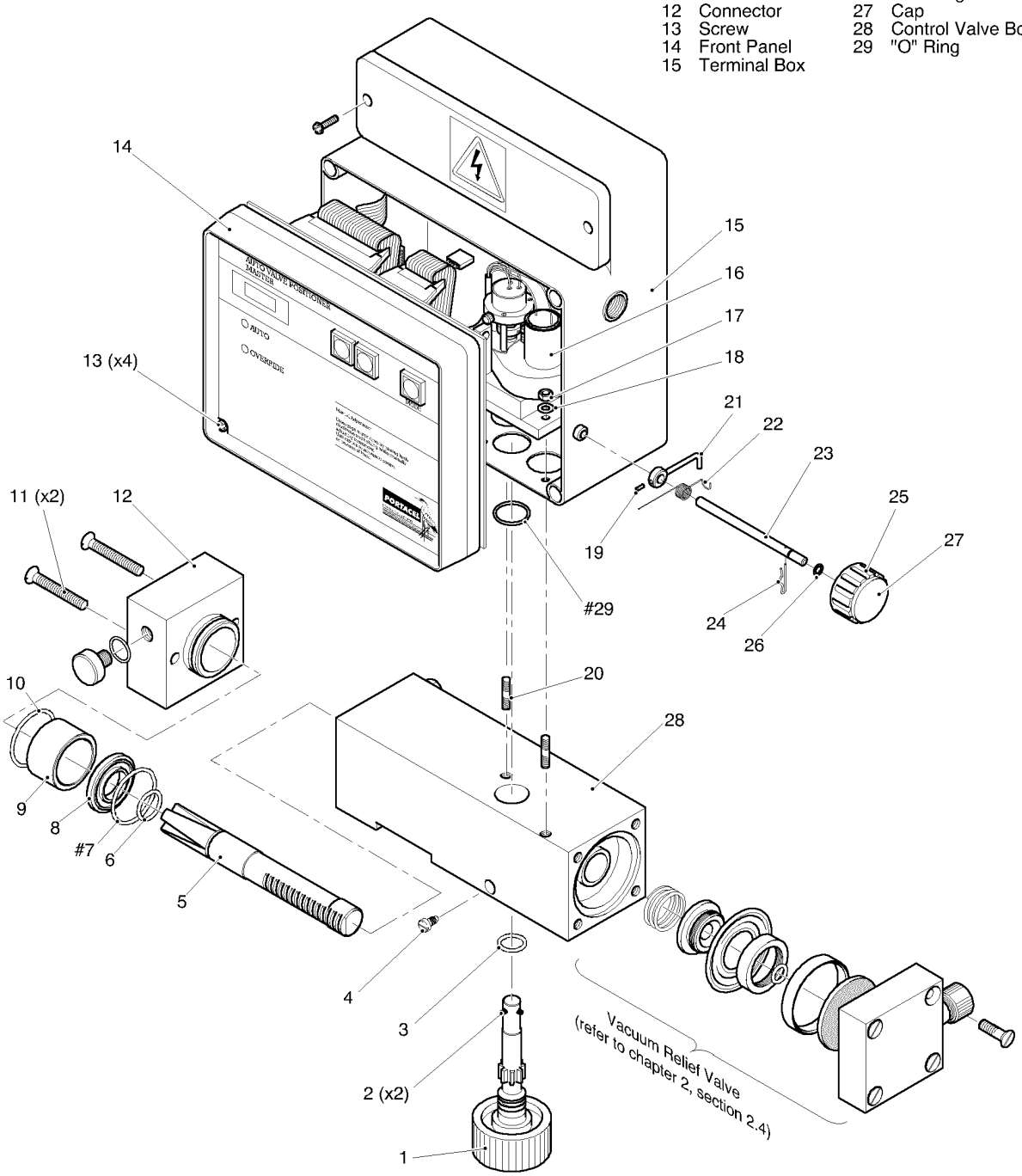

Fig. 6-1 Typical Installation of AVP and FPC Controllers

THAMES 60
DOSING UNIT

OPERATING AND MAINTENANCE MANUAL

Part No 41312

Issue 2
May 2001

Portacel
Winnall Valley Road,
Winchester,
Hampshire, SO23 0LD,
United Kingdom.

Tel: 44 (0) 1256 896966
Fax: 44 (0) 1962 866084

CONTENTS

Amendment Record

Introduction

Safety

Chapter 1: General Description

Introduction
1. Leading Particulars
2. Purpose
3. Principle of Operation
4. System Overview

Chapter 2: Technical Description

Introduction
1. General
2. Principal Components
3. System Integration

Chapter 3: Installation and Commissioning

Introduction
1. General
2. Installing the Thames 60 Dosing Unit(s)
3. Commissioning

Chapter 4: Operating Instructions

Introduction
1. General
2. Start Up
3. Operation
4. Shutdown

Chapter 5: Maintenance

Introduction
1. General
2. Removal and Replacement
3. Fault Finding
4. Service of Manual Chlorinator & Sulphonator
5. Service of Automatic Chlorinator & Sulphonator
6. Service of Manual Ammoniator
7. Spare Parts

Chapter 6: Options

Introduction
1. General
2. Option 1: Automatic Valve Positioner (AVP)
3. Option 2: Flow Proportional Controller (FPC)

AMENDMENT RECORD

Amendment No	Date	Signature

INTRODUCTION

This Manual contains the information on the Thames 60 Dosing Unit, its Operation and Maintenance. The manual refers to the Thames 60 Dosing Unit and its operation in the Manual mode it does not include all available options. Chapter 6 reflects the delivered Automatic options.

The Thames 60 Dosing Unit doses a disinfecting gas into a water supply from 15 Kg hr to 60 Kg hr of chlorine or sulphur dioxide and 7.5 Kg hr to 30 Kg hr of ammonia.

The unit can be either wall or floor mounted and is compact and easily maintained. Control of the unit can be either Manual or Automatic via an automatic valve positioner (AVP) or flow proportional controller (FPC).

For capacities of 25 g to 12 Kg hr refer to Thames 12 Operating and Maintenance Manual (Part No 41311).

For capacities of 60 Kg to 250 Kg hr refer to Thames 250 Operating and Maintenance Manual (Part No 41323).

For detailed information on the AVP refer to Operating and Maintenance Manual (Part No 41313).

For detailed information on the FPC refer to Operating and Maintenance Manual (Part No 41314).

COPYRIGHT

© Portacel Disinfection Systems 1999

All rights reserved. No part of this publication may be reproduced, stored in a retrieval system, or transmitted in any form or by any means, electronic, mechanical, photocopying, recording or otherwise, without the prior permission of Portacel Disinfection Systems.

SAFETY OF PERSONNEL

WORKING ENVIRONMENT

Purpose

The Portacel Thames 60 Dosing Unit is designed to operate with commercially produced gas. The necessary precautions relating to the gas must be undertaken at all times. For these precautions refer to the manufacturers or suppliers data sheets.

PORTACEL decline responsibility if an attempt is made to use the equipment for any purpose other than for which it was designed.

Environment

The Portacel Thames 60 Dosing Unit is installed into a system using gases supplied by third parties. The equipment must be operated in accordance with the gas suppliers information and instructions and in accordance with site instructions including:

(a) All pipework must be installed to ensure it is maintained at an ambient temperature ie. no cold spots.
(b) Temperature range.
(c) Humidity.
(d) Vibration.
(e) Electrostatic discharge.

Pneumatic Power

The level of vacuum supplied by the Ejector to operate the regulator is a minimum of 122mm of mercury (65 water gauge).

Personnel

▲	**WARNING!** **If incorrectly used this equipment can cause severe injury. Those who use and maintain the equipment should be trained in its proper use, and should have read and understood the Safety Instructions contained in this manual before attempting to set up, operate, adjust or service the equipment.**
▲	**WARNING!** **The gas used can cause serious injury. For the safety precautions required refer to the manufacturers' data sheets and the site operating instructions. Where not available seek advice from the gas supplier.**

SAFETY ALERTS

SYMBOLS AND DECALS

Personnel must be familiar with all the warning symbols and decals fitted to the equipment. Failure to recognise a warning and read the associated safety instructions may result in injury or death.

The following symbols and decals are used on the equipment:

This decal is used to indicate an electrical hazard. The equipment must be disconnected from main electrical power supply when this decal is encountered during installation, maintenance or setting-up.

REPLACE DAMAGED DECALS IMMEDIATELY

WARNINGS, CAUTIONS AND NOTES

Throughout this manual attention is drawn to specific points as follows:

WARNING!

A warning alerts the reader to the potential hazards. Failure to read and obey the safety instructions may result in serious injury to, or death of, personnel and damage to equipment.

CAUTION!

A caution alerts the reader to recommendations or instructions, non-observance of which could cause damage to equipment.

NOTE:

A note provides additional information that should be given special attention.

OPERATIONAL SAFETY

Operation

Do not start the equipment if the unit is not fully assembled.

Specific warnings are included throughout this manual in the relevant procedures. As a general warning the following areas of the equipment present a particular danger during setting-up and operation:

(a) Areas in direct contact with dosing gas.

ELECTRICAL HAZARD

WARNING!

The equipment must be disconnected form the main electrical power supply during installation or maintenance.

The equipment operates from a 100 to 240V AC main electrical supply or 24V DC. Specific warnings are included throughout this manual in the relevant procedures. As a general warning the following precautions must always be applied.

Only qualified personnel should carry out work on the equipment and the external alarm circuits.

ELECTRO-STATIC DISCHARGE (ESD) PRECAUTIONS

Precautions against ESD must be taken to prevent damage to the devices fitted to electronic circuits. When handling of the electronic circuits is required observe the following:

(a) Do not touch electronic circuits whilst unpacking.
(b) Always use a grounded wrist strap whilst handling electronic circuits.
(c) Ensure that the equipment is grounded when using the wrist strap.

Chapter 1

General Description

Contents

Para.		Page
	INTRODUCTION	**1.3**
1.	**LEADING PARTICULARS**	**1.5**
1.1	Dimensions	1.5
1.2	Weight	1.5
1.3	Connections and Operating Environment	1.5
1.4	Delivery Capacities and Accuracy	1.5
1.5	Displays and Indicators	1.6
2.	**PURPOSE**	**1.7**
3.	**PRINCIPLE OF OPERATION**	**1.7**
4.	**SYSTEM OVERVIEW**	**1.10**
4.1	General	1.10
4.2	Safety	1.10
4.3	Chlorine System	1.11
4.4	Sulphur Dioxide System	1.11
4.5	Ammonia System	1.11

ILLUSTRATIONS

Fig. No.		Page
1-1	Thames 60 Dosing Unit (with Differential Regulator and Vacuum Alarm Switch)	1.8
1-2	Thames 60 Dosing Unit Basic System Configuration	1.9

TABLES

Table No.		Page
1-1	Meter Tube Sizes and Operation	1.6

INTRODUCTION

This Chapter covers the principal particulars of the Thames 60 Dosing Unit and includes the purpose and principle of operation of the unit together with an overview of a typical installation in which it may be fitted and operated.

1. LEADING PARTICULARS

This is a list of the dimensions, weight, input and output requirements of the unit.

1.1 Dimensions

Floor Standing Unit:

Height ..... 1816 mm
Width ..... 360 mm
Depth ..... 350 mm

Wall Mounted Unit:

Height ..... 1232 mm
Width ..... 360 mm
Depth ..... 305 mm

1.2 Weight

Floor Standing Unit (with all options fitted) ..... 21.5 Kg
Wall Mounted Unit (with all options fitted) ..... 16.5 Kg

1.3 Connections and Operating Environment

Operating Range (°C) ..... 0 - 50 °C
Connections (Floor standing Wall mounted unit) ..... uPVC
Vacuum .....122 mm of mercury (65 water gauge) minimum

1.4 Delivery Capacities and Accuracy

Chlorinator ..... 12 to 60 Kg h
Sulphonator ..... 12 to 60 Kg h
Ammoniator ..... 6 to 30 Kg h
Accuracy ..... 4 of indicated flow

1.5 Displays and Indicators

Vacuum Gauge .....0 - 800 mbar
Meter Tube..... Length 300 mm.

The meter tubes differ in length and bore diameter depending on the capacity of delivery required. The tubes are dual calibrated in Kilograms per hour (Kg h) and Pounds per Day (P.P.D.).

Table 1.1 shows the delivery capacity, tube length and the gas each tube can be used for.

Tube Length (mm)	Capacity (Kg/h)		
	Chlorine	Sulphur	Ammonia
300	15	15	7
300	20	20	10
300	30	30	15
300	40	40	20
300	50	50	25
300	60	60	30

Table 1-1 Meter Tube Sizes and Operation

2. PURPOSE

The Thames 60 Dosing Unit (Fig.1-1) is designed to control the gas flow rate into the water main.

The unit controls the gas leaving the gas storage cylinders via vacuum regulators. Before the vacuum regulators the gas is supplied at relatively high pressure. After the vacuum regulators the Thames 60 Dosing Unit draws gas through a vacuum system and regulates the rate at which the gas is supplied into the water main via an ejector to treat the water.

3. PRINCIPLE OF OPERATION (Fig. 1-2)

The Thames 60 Dosing Unit is designed to control and meter a supply of gas under vacuum conditions from a pressurised gas supply into a water main. A vacuum must exist to enable the gas to be supplied to the Thames 60 Dosing Unit, if the vacuum fails the gas supply is shut off.

The vacuum is produced by passing water through an ejector that produces a vacuum by the venturi effect. In some cases the water is pumped past the ejector to ensure that sufficient vacuum is produced to open the vacuum valve which then supplies gas to the Thames 60 Dosing Unit via the vacuum pipe.

The supply of the toxic gas by vacuum instead of pressure is a safety measure ensuring that if there is a leak in the supply pipe after the vacuum regulator, air is drawn into the vacuum supply line instead of gas leaking out as would happen in a pressurised supply. To further reduce the risk the vacuum regulator is fitted as close as possible to the gas source to reduce the length of pressurised pipe that has to be used.

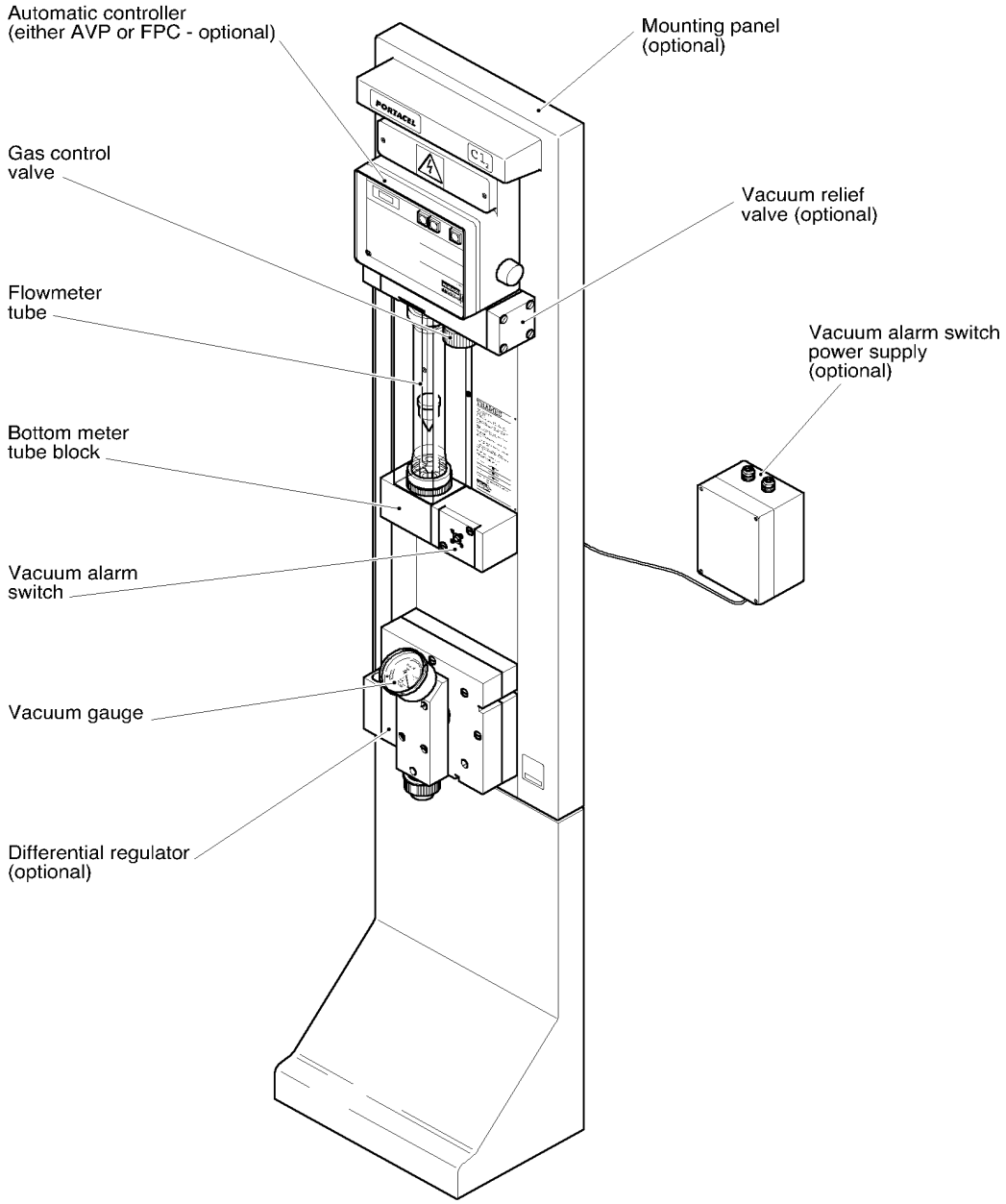

Fig. 1-1 Thames 60 Dosing Unit (with Differential Regulator and Vacuum Alarm Switch)

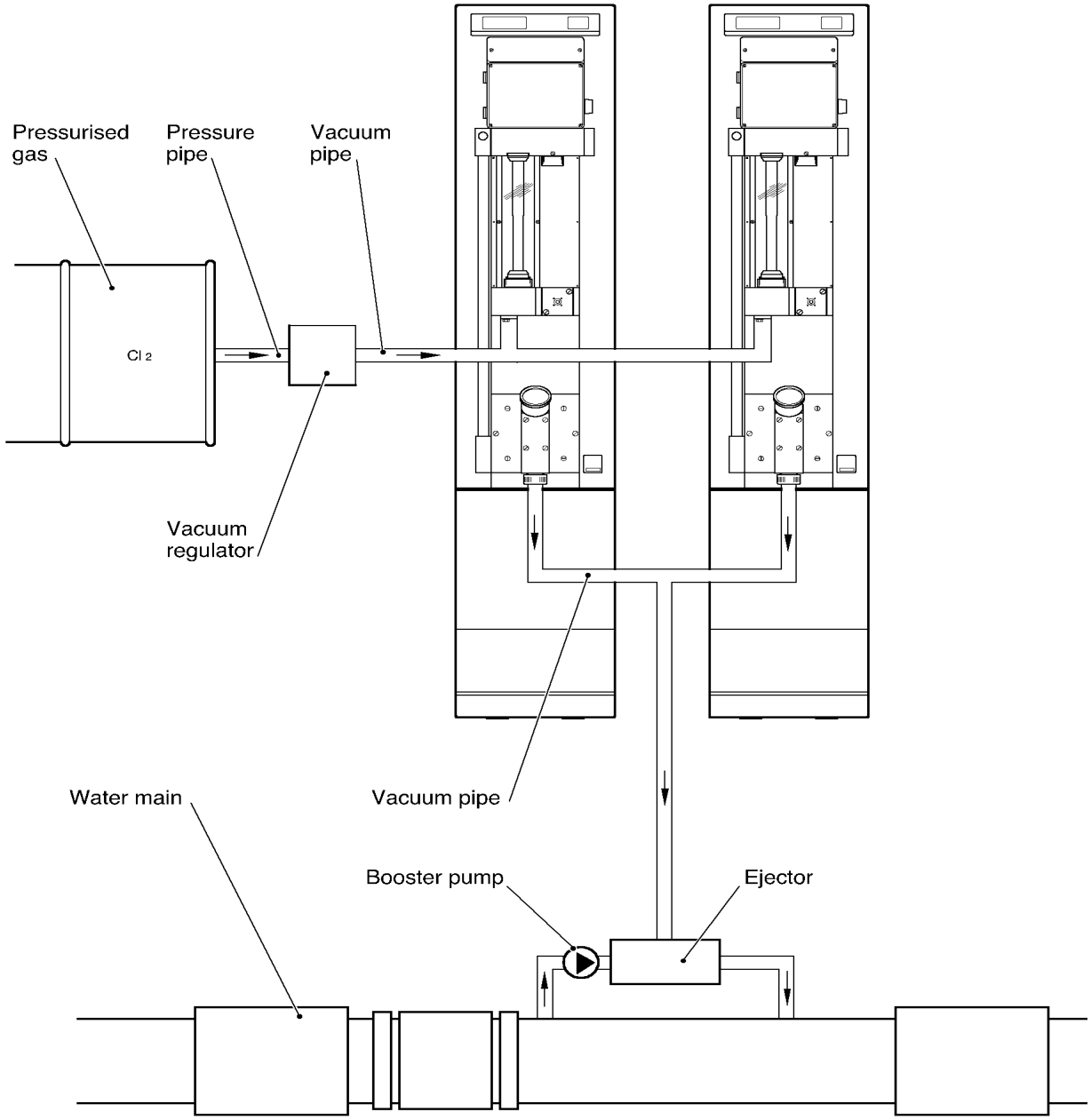

Fig. 1-2 Thames 60 Dosing Unit Basic System Configuration

4. SYSTEM OVERVIEW

The Thames 60 Dosing Unit operates in a system that is designed to ensure that the gas does not liquify but remains in the less corrosive, gas state. The gas is supplied from the vacuum regulator to the Thames 60 Dosing Unit. A control valve is operated manually to adjust the dosing rate in response to either an increase or a reduction in water flow or an improvement or deterioration in the water quality. For other water treatment systems the manual control is replaced with the automatic valve positioner (AVP) unit. If this unit is fitted details can be found in the Options Chapter.

The Thames 60 Dosing Unit controls the amount of gas, as set by the operator, and supplies it to the water supply via the ejector. A differential regulator ensures a constant pressure drop is maintained across the control valve, this makes sure that changes of water pressure will not change the set dosing rate.

4.1 General Information

The Thames 60 Dosing Unit can be used to control and meter chlorine, sulphur dioxide and ammonia in gas form.

The supply and metering of each of the gases is identical. Each gas is supplied separately (none of the gases mix until applied in correctly metered quantities to the water).

4.2 Safety

The supply of each gas through its own vacuum pipes means that if a pipe were to leak (after the vacuum regulator), air would be drawn into the system instead of gas being forced out of the pipe. In the case of a large leak the vacuum level would drop below the level required to operate the vacuum valve and the supply of gas would be stopped at the valve.

When vacuum levels move out of tolerance (low or high) a vacuum switch in the Thames 60 Dosing Unit will operate a switch which can be used to activate customer alarms to notify the operator.

Because chlorine and ammonia become explosive if mixed, the two chemicals are kept in separate storage facilities. All storage facilities should have recommended sensor equipment to detect leaks of gas. When leaks are detected, alarms and safety shut-down systems should be operated. For all details of the alarms and procedures refer to the individual site operating instructions.

4.3 Chlorine System

Chlorine is supplied from the gas supply bottles under pressure to the vacuum regulator. Prior to entry into the regulator, heat is applied to the gas to prevent condensing vapour entering the system. The supply of gas from the regulator depends upon there being a vacuum strong enough to open the vacuum valve and if the vacuum fails at any time the valve will close shutting off the gas supply.

The operating vacuum is supplied by venturi action from the ejector to the vacuum regulator via the Thames 60 Dosing Unit. The chlorine gas is supplied through a plastic vacuum pipe to the Thames 60 Dosing Unit where the flow is adjusted, either manually or automatically, using an automatic valve positioner (AVP) or flow proportional controller (FPC), to the required level. The required amount of gas is supplied to the ejector unit and then to the water to be mixed in the contact tank.

A sample of water in the contact tank is analysed to check the level of dosing being applied. The result of the analysis is used to correct the dosing level of the chlorine if required. The correction is carried out automatically but should be checked at regular intervals by the operator.

4.4 Sulphur Dioxide System

The supply, metering and dosing of sulphur dioxide gas is carried out in the same way as chlorine.

After the contact tank the water is analysed if the chlorine level is too high sulphur dioxide is added at the level set by the operator to correct the level of chlorine.

4.5 Ammonia System

The supply, metering and dosing of Ammonia is carried out in the same way as chlorine. Ammonia and chlorine become explosive if mixed. The two Chemicals are kept in separate rooms to ensure that they do not mix.

After the granular actuated carbon (GAC) tank, the water is analysed and Ammonia added, if required, at the level set by the operator.

Chapter 2

Technical Description

Contents

Para.		Page
	INTRODUCTION	**2.3**
1.	**GENERAL**	**2.5**
2.	**PRINCIPAL COMPONENTS**	**2.5**
2.1	Flowmeter Tube	2.5
2.2	Bottom Meter Tube Block	2.5
2.3	Gas Control Valve	2.9
2.4	Vacuum Relief Valve (Optional)	2.9
2.5	Differential Regulator (Optional)	2.9
2.6	Vacuum Gauge	2.13
2.7	Vacuum Alarm Switch (Optional)	2.13
2.8	Mounting Panel	2.13
3.	**SYSTEM INTEGRATION**	**2.19**
3.1	Dosing Gas Supply	2.19
3.2	Vacuum Regulator	2.19
3.3	Piping	2.19
3.4	Alarms	2.19

ILLUSTRATIONS

Fig. No.		Page
2-1	Thames 60 Dosing Unit Principal Components	2.6
2-2	Typical Arrangement of Flowmeter Tube	2.7
2-3	Bottom Meter Tube Block Assembly	2.8
2-4	Gas Control and Vacuum Relief Valve	2.11
2-5	Differential Regulator	2.15
2-6	Vacuum Alarm Switch	2.17
2-7	Dosing System	2.20

INTRODUCTION

This Chapter gives a technical description of the principal components of the Manually Operated Thames 60 Dosing Unit and the operation of those components. Optional items of equipment for the Automatic Variants are detailed in Chapter 6.

1. GENERAL

The Thames 60 Dosing Unit (Fig. 2-1) is supplied either as a manually or automatically controlled dosing unit, the rate of flow being read directly from the flowmeter tube. The unit is operated by the manual control knob at the bottom of the valve block, this being either manually or automatically controlled. Turning it counter-clockwise (looking from underneath) opens the valve and clockwise shuts the valve. The dosing unit normally comprises the following:

(a) Flowmeter Tube.
(b) Bottom Meter Tube Block.
(c) Gas Control Valve.
(d) Vacuum Relief Valve. (Optional)
(e) Differential Regulator. (Optional)
(f) Vacuum Gauge. (Optional)
(g) Vacuum Alarm Switch. (Optional)
(h) Mounting Panel. (Wall or Floor Type Optional)
(i) Controller. (Both optional, either Automatic Valve Positioner (AVP) or Flow Proportional Controller (FPC))

2. PRINCIPAL COMPONENTS

2.1 Flowmeter Tube

The flowmeter tube (Fig. 2-2) indicates the rate of flow of gas from the gas cylinder through the dosing unit to the ejector and then dosed into the water main. The meter tubes vary in length and diameter (refer to Chapter 1 - Leading Particulars) to suit the capacities of the units to which they are fitted, each tube is made of borosilicate glass.

A rotating ball or flat-topped float suspended in an upward flow of gas shows the flow rate reading against the graduation marks on the tube. For a ball, the reading should be taken at the horizontal axis and for a float, the reading adjacent to the flat top should be taken.

2.2 Bottom Meter Tube Block

The bottom meter tube block (Fig. 2-3) supports the flowmeter tube. The tube is held in place by the knurled ring at the base of the tube which, when turned, creates a clamping action to hold the tube against the control valve block at the top end of the tube. The tube is then held securely against sealing O rings at each end. The meter tube can be withdrawn from the unit by releasing the knurled ring. Gas from the vacuum regulator enters the dosing unit at the bottom meter tube block through tubing and a union connection.

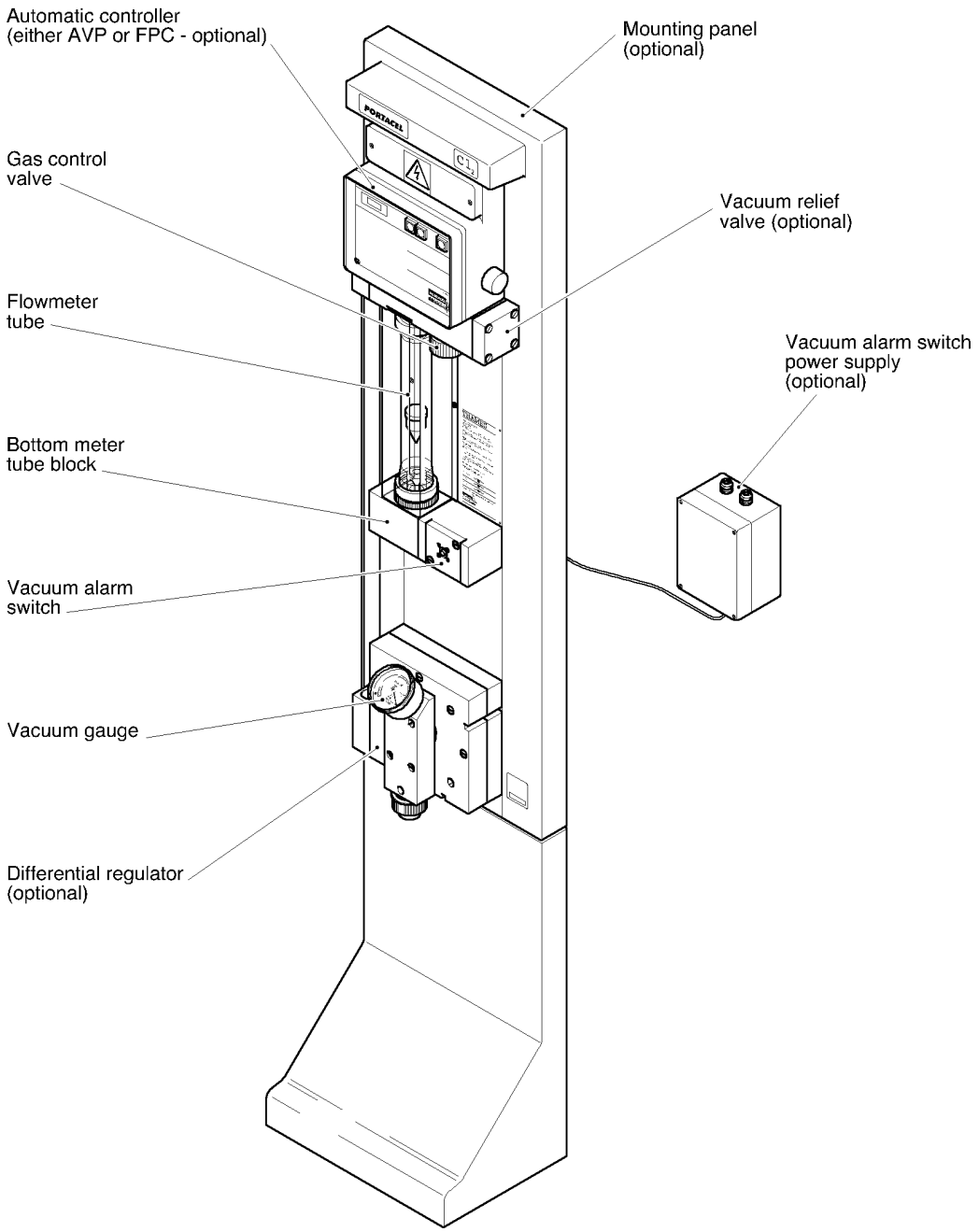

Fig. 2-1 Thames 60 Dosing Unit Principal Components

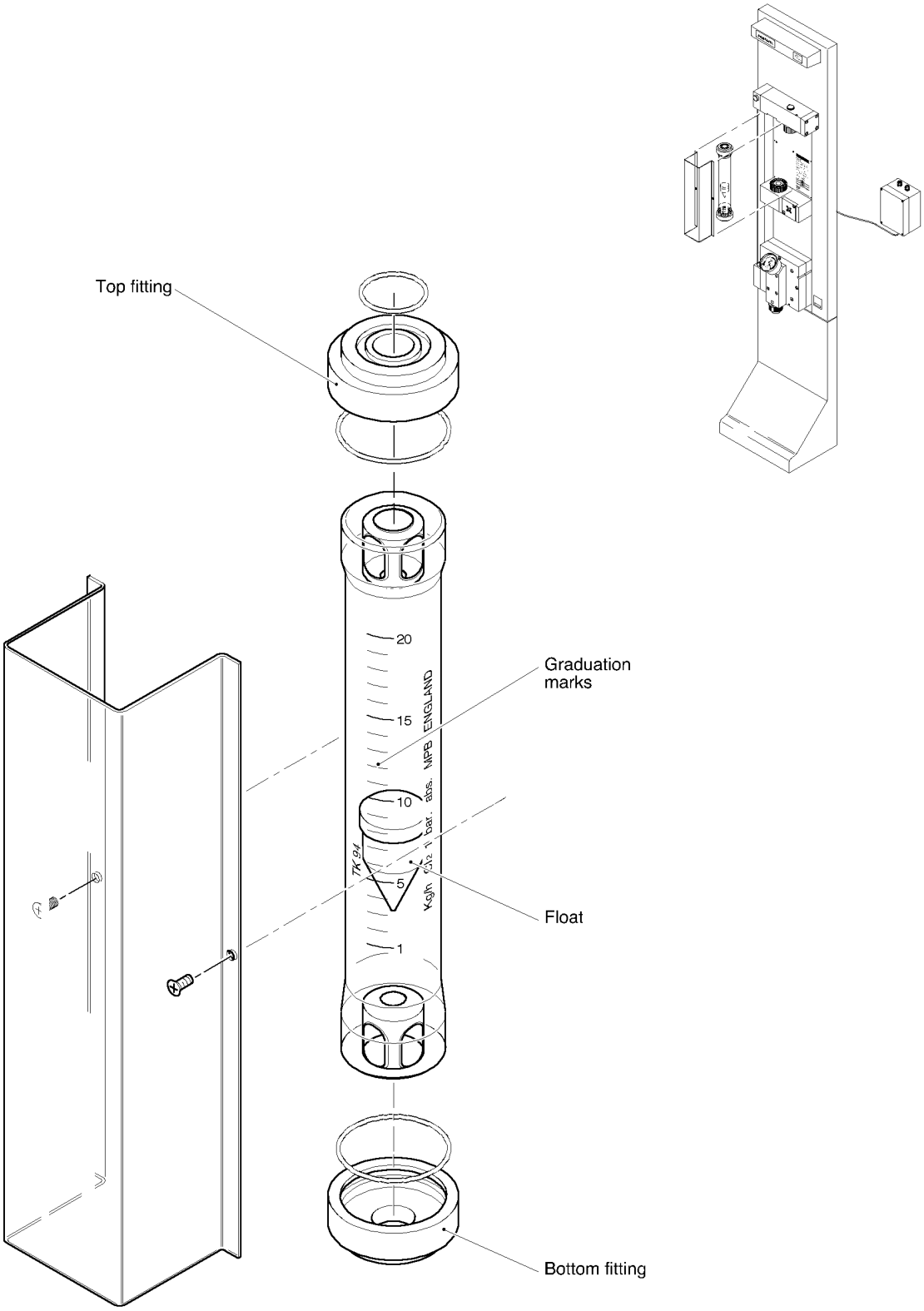

Fig. 2-2 Typical Arrangement of Flowmeter Tube

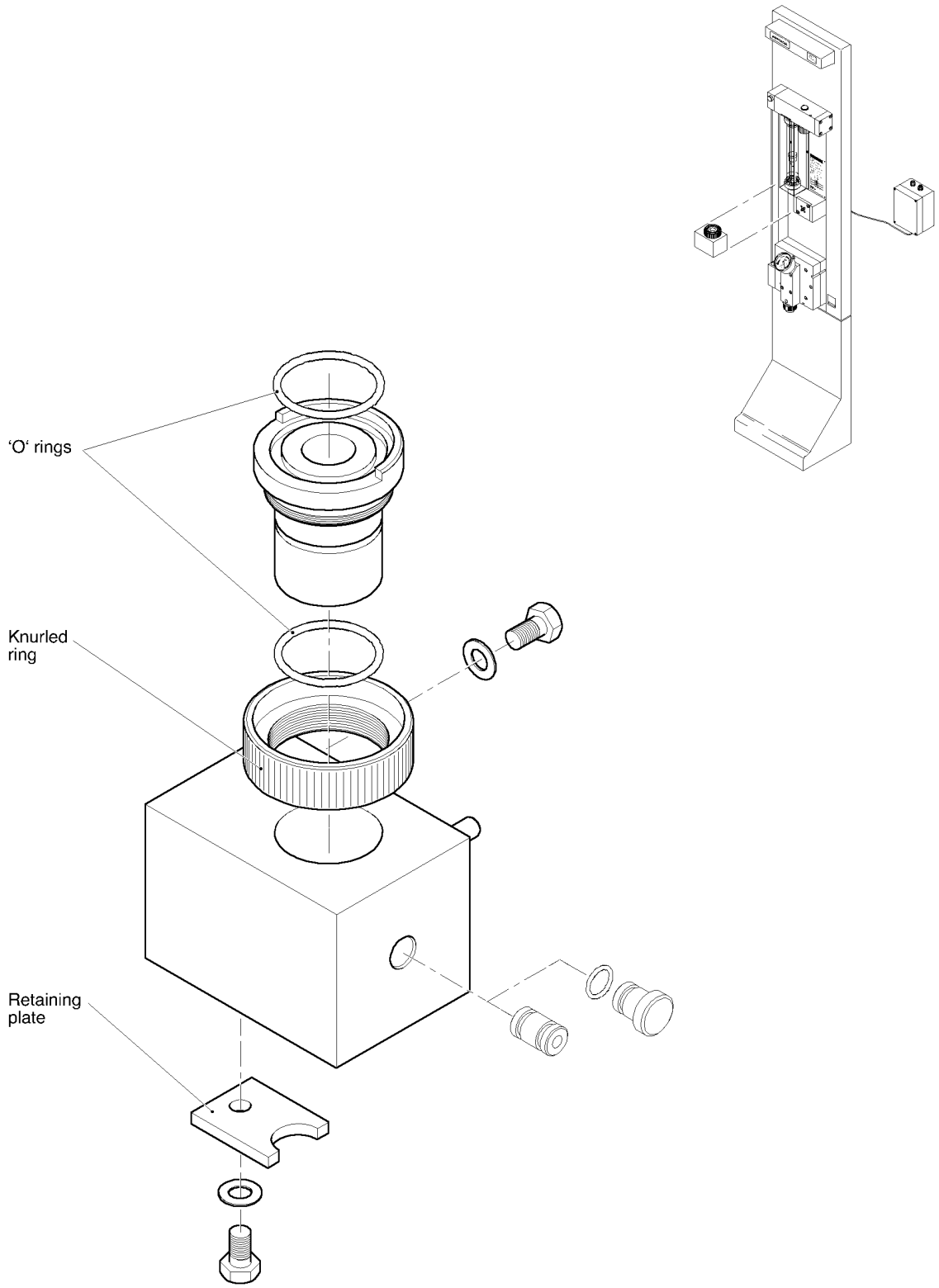

Fig. 2-3 Bottom Meter Tube Block Assembly

2.3 Gas Control Valve

The gas control valve (Fig. 2-4) sits above the flowmeter tube from which the gas flow enters the valve block.

The gas control valve enables the gas flow to be regulated using a knurled control knob on its under side. The control knob is attached to a spindle which has a gear profile meshing with a rack profile on the side of the control valve spindle.

The control valve spindle is positioned horizontally and is drawn left and right by the gear and rack. At the left hand end of the spindle a Vee groove is formed in a parallel diameter section of the spindle which passes through a short bore of the same diameter as that part of the spindle with the Vee groove. When the valve spindle is moved to the left the flow is restricted, and when the spindle is drawn to the right the gas flow increases as the section of the Vee groove opens out.

On a Thames 60 Dosing Unit fitted with either an automatic valve positioner (AVP) or a flow proportional controller (FPC) a motor drives an extension of the manual control knob shaft to rotate the valve spindle. (If an AVP or FPC is fitted refer to Chapter 6 - Options for details).

Turning the knob:

(a) Counter-clockwise, looking up from below, **opens the valve**.
(b) Clockwise, looking up from below, **closes the valve**.

The manual control knob is marked with a yellow dot which when aligned with the yellow line on the valve block puts the valve into the closed position.

2.4 Vacuum Relief Valve (Optional)

The control valve block can be fitted with a vacuum relief valve (Fig. 2-4) at its right-hand end. This valve releases any excessive vacuum created in the event of a restriction of gas supply (ie: when the gas cylinder is exhausted). A vent tube allowing air into the valve to relieve the vacuum enters the valve block at the top surface, this tube draws air in from the outside of the building.

2.5 Differential Regulator (Optional)

The differential regulator is designed to maintain a constant pressure differential across the control valve. At any given control valve opening position, the differential regulator will ensure that any erratic fluctuation in vacuum from the ejector will not alter the pressure difference across the valve which could increase, or decrease, the amount of gas passing through the valve aperture.

The regulator maintains the flow of gas constant to the manual control valve setting.

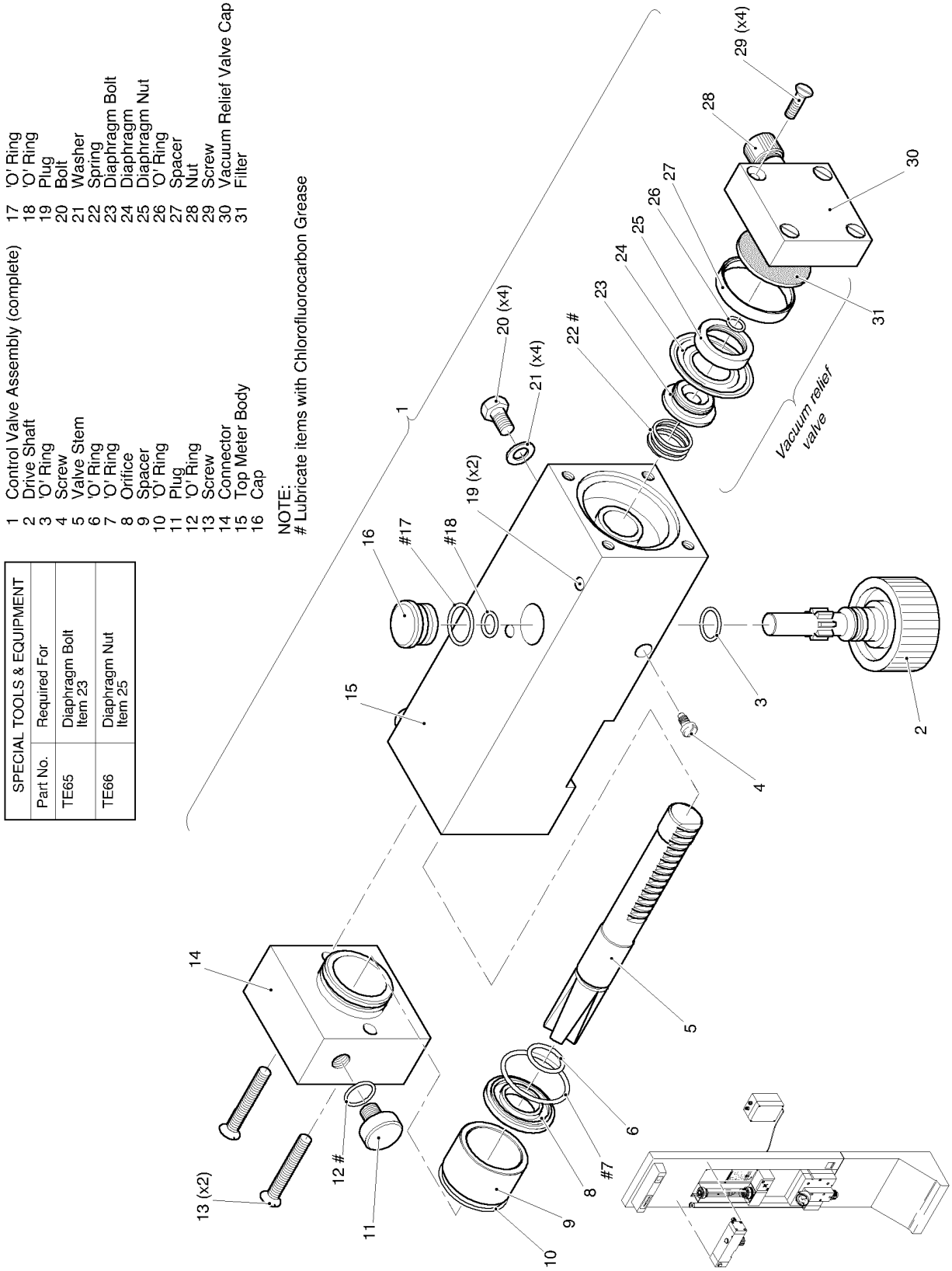

Fig. 2.4 Gas Control and Vacuum Relief Valve

2.6 Vacuum Gauge

The differential regulator (Fig. 2-5) is fitted with a vacuum gauge indicating the vacuum in the unit. The gauge is marked with a red and a green section. The red section indicates that the vacuum within the unit is not sufficient for the unit to operate correctly. A vacuum indication within the green section indicates that the unit will operate correctly.

2.7 Vacuum Alarm Switch (Optional)

The vacuum alarm switch (Fig. 2-6) is fitted to the side of the bottom meter tube block and produces a signal on detection of a high or low vacuum. The values of high and low vacuum are set at manufacture but can be site adjusted. The switch can be connected to external alarms.

2.8 Mounting Panel

The Thames 60 Dosing Unit is assembled on a mounting panel constructed of glass reinforced plastic (GRP).

There are two types of mounting panel available wall-mounting panels and a floor-standing panel. The floor-standing panel comprises the wall panel with a lower extension in the form of a foot-shaped plinth.

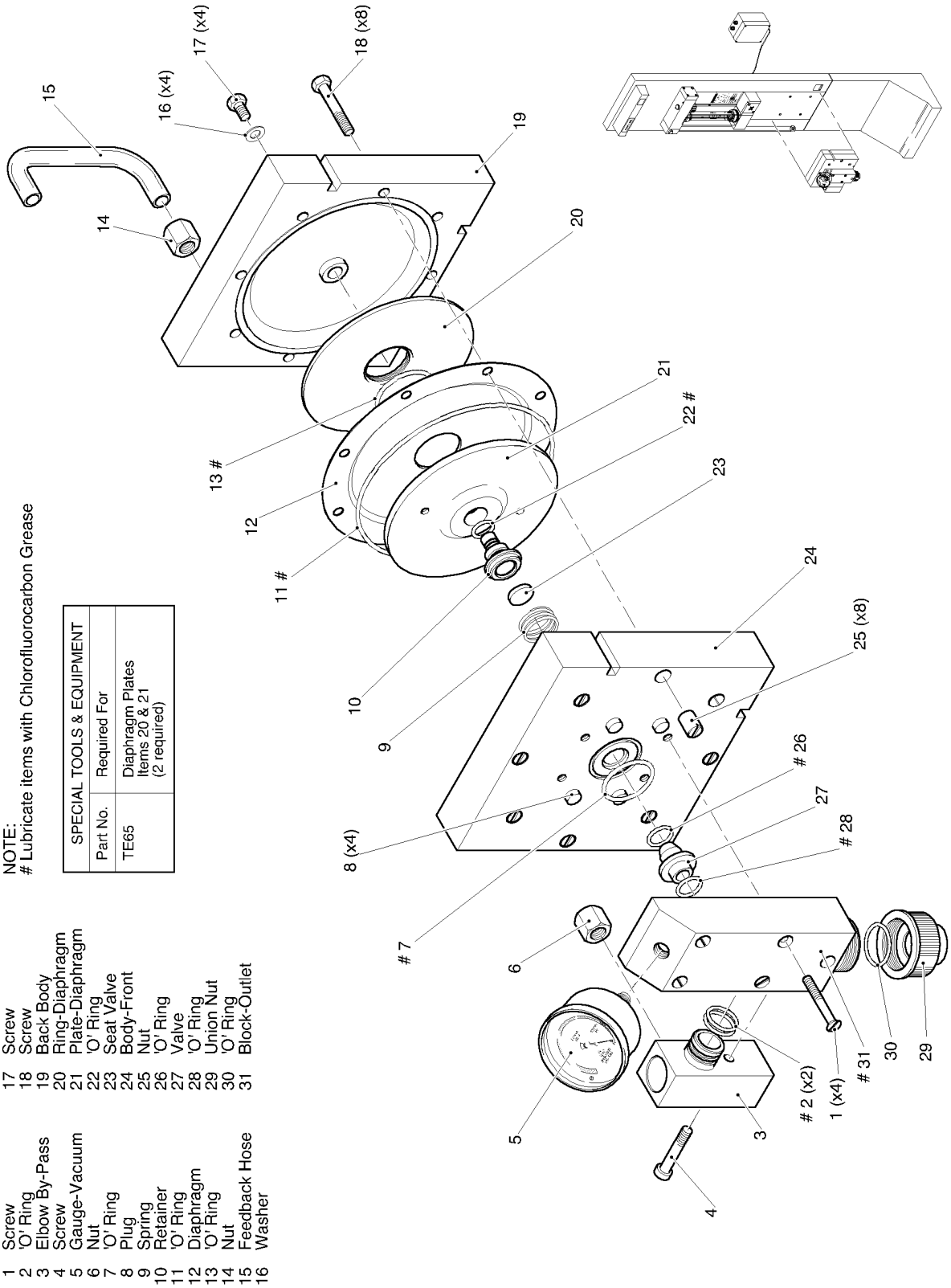

Fig. 2-5 Differential Regulator

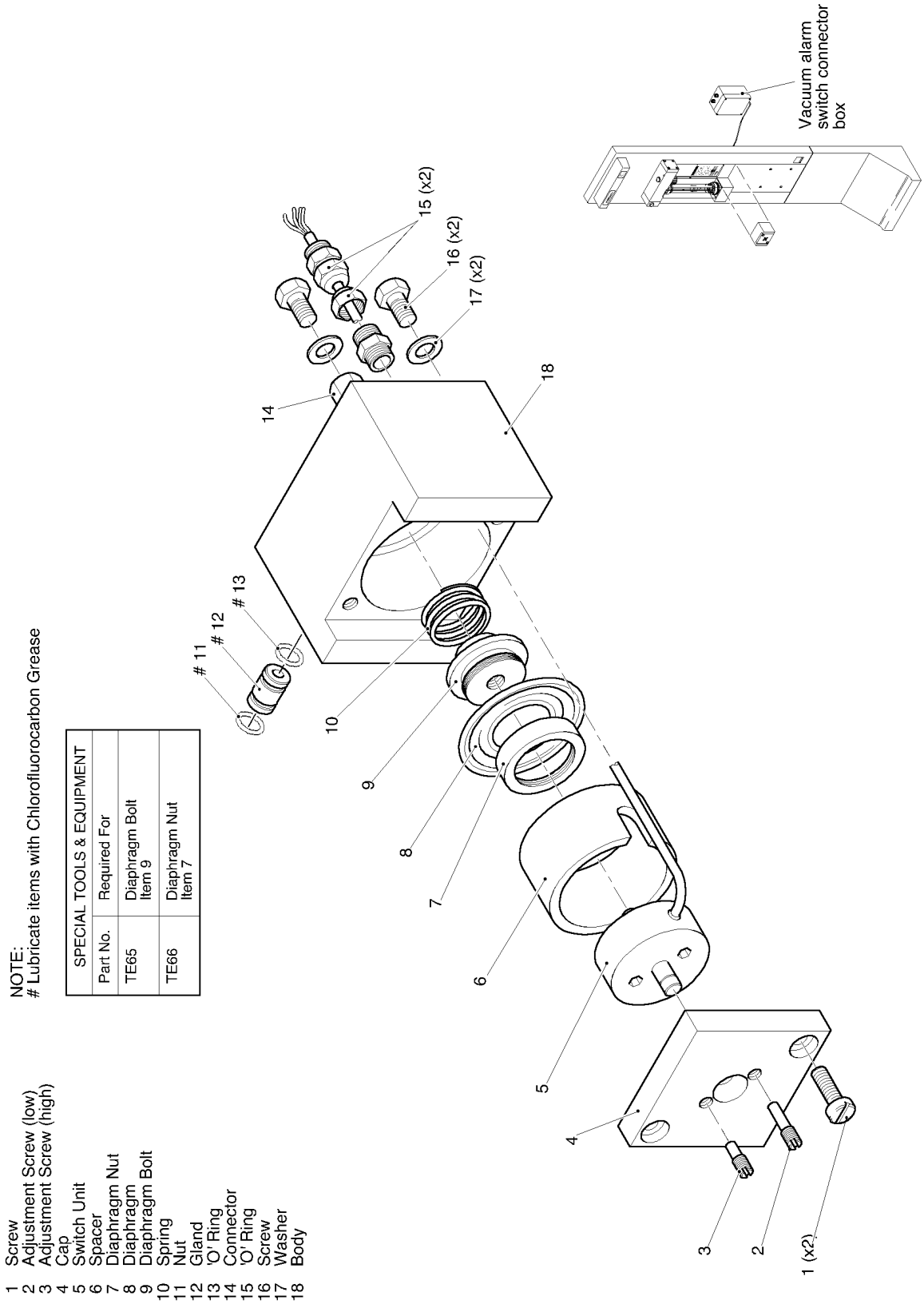

NOTE:
Lubricate items with Chlorofluorocarbon Grease

SPECIAL TOOLS & EQUIPMENT	
Part No.	Required For
TE65	Diaphragm Bolt Item 9
TE66	Diaphragm Nut Item 7

1 Screw
2 Adjustment Screw (low)
3 Adjustment Screw (high)
4 Cap
5 Switch Unit
6 Spacer
7 Diaphragm Nut
8 Diaphragm
9 Diaphragm Bolt
10 Spring
11 Nut
12 Gland
13 'O' Ring
14 Connector
15 'O' Ring
16 Screw
17 Washer
18 Body

Fig. 2-6 Vacuum Alarm Switch

3. SYSTEM INTEGRATION

To enable the Thames 60 Dosing Unit to operate correctly it must be integrated into a system (see Fig. 2-7) with the following:

(a) Supply of dosing gas.
(b) Vacuum Regulator.
(c) Vacuum piping between the regulator and the unit.
(d) Ejector unit.
(e) Vacuum piping between the unit and the Ejector.
(f) System alarm connections (as required).

3.1 Dosing Gas Supply

The dosing gas is supplied under pressure to the vacuum regulator. The supply, piping and control are installed by the customer and in accordance with current regulations.

3.2 Vacuum Regulator

The Vacuum Regulator controls the gas to the Thames 60 Dosing Unit via a vacuum system. The vacuum required to operate the regulator is supplied from the ejector, if the vacuum fails then the gas supply is cut off.

3.3 Piping

Plastic pipe is used to supply the vacuum from the ejector to the vacuum regulator via the Thames 60 Dosing Unit. The same piping is used to supply the gas to the ejector via the Thames 60 Dosing Unit. The size of the piping will depend on the dosing rate required.

3.4 Alarms

External alarms and monitoring equipment can be connected to the vacuum switch, fitted primarily for control and auto changeover purposes it is also utilised to notify the operator of an over-vacuum situation or of a failure of vacuum.

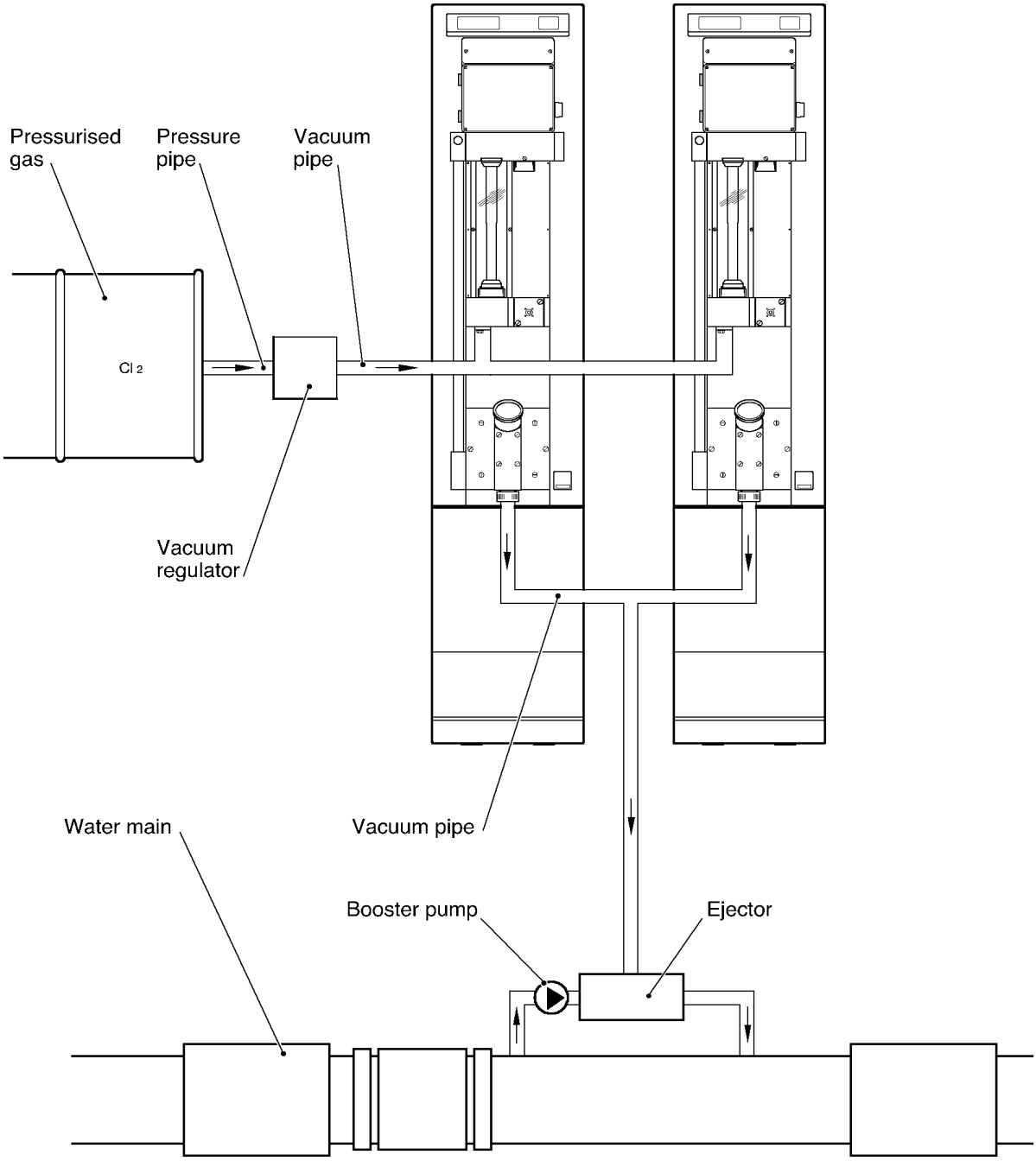

Fig. 2-7 Dosing System

Chapter 3

Installation and Commissioning

Contents

Para.		Page
	INTRODUCTION	**3.3**
1.	**GENERAL**	**3.5**
1.1	Choice of Site	3.5
1.2	Unpacking the Equipment	3.6
1.3	Packing Inventory	3.6
2.	**INSTALLING THE THAMES 60 DOSING UNIT(S)**	**3.6**
2.1	Mounting the Unit	3.6
2.1.1	Wall Mounted	3.7
2.1.2	Floor Mounted	3.8
2.2	Tubing Connections	3.9
2.3	Vacuum Relief Valve Vent Tube (if fitted)	3.10
2.4	Vacuum Alarm Switch (if fitted)	3.11
3.	**COMMISSIONING**	**3.14**
3.1	General	3.14
3.2	Gas Regulating Function	3.14
3.2.1	Checking for Vacuum	3.14
3.2.2	Checking for Gas Leaks	3.15

ILLUSTRATIONS

Fig. No.		Page
3-1	Drilling Diagram for Wall-mounting Panels	3.7
3-2	Drilling Diagram for Floor-standing Mounting Panel	3.9
3-3	Drilling Diagram for the Vacuum Alarm Switch Power Supply Box	3.11
3-4	Connections for the Vacuum Alarm Switch Power Supply Box	3.13

TABLES

Table No.		Page
3-1	Vacuum Alarm Voltage Links	3.12

INTRODUCTION

This Chapter gives the description required to Install and Commission the Manual Thames 60 Dosing Unit. For the extra procedures required to install an automatic valve positioner (AVP) or flow proportional controller (FPC) refer to the specific Operating and Maintenance Manual for each (AVP - Part No. 41313, FPC - Part No. 41314).

1. GENERAL

These installation and commissioning instructions are prepared assuming that the work will be carried out by an approved and experienced installation and commissioning engineer accustomed to working with this type of equipment and the plant in which the Thames 60 Dosing Unit will be working.

1.1 Choice of Site

The following criteria should be considered when selecting a site for installing the Dosing Unit(s):

CAUTION!
To prevent liquefaction of the gas between the storage cylinder and vacuum regulator, the ambient temperature should be the same as, or higher than, that around the gas storage cylinder(s). Pipework should not be routed through draughts or cold spots at any point.

CAUTION!
Allow at least 300 mm access space to the left-hand side of the unit for removal and servicing of the valve stem.

(a) An adequate supply of clean water under sufficient pressure is needed to operate the ejector.
(b) The distance from the ejector in the dosing loop to the point of dosing into the water main should be as short as possible with a minimum of obstacles that could cause a loss of head.
(c) The pipe runs between the gas cylinders and the vacuum regulator, should be as short as possible.
(d) Vacuum lines between dosing unit ejector and dosing unit vacuum regulator should be kept as short as practically possible.
(e) It is essential to have easy access to the unit for both operation and maintenance. Wherever possible the unit should be mounted in an area which is well lit and gives convenient access all round the unit and at a height at which the unit can be commissioned, operated and maintained with the operator standing on the ground. Where this is not possible, specific risk assessment must be carried out to determine safe methods of working.

1.2 Unpacking the Equipment

It is advisable to unpack the unit at the site where it is to be installed. Check each item against the packing note, and ensure that the consignment is complete before discarding the packing material.

Examine each item to see that it is undamaged and that all vents, ports, etc, are clean and free from packing. Should any of the items be damaged, it will be helpful that the items are returned in or with the original packing in which they were dispatched.

1.3 Packing Inventory

CAUTION!
Check that the unit received is correct for both the voltage and the chemical with which it is intended to be used. The latter is important since some of the components in the unit have to be of the correct material for the particular gas.

The inventory of the items that are packed for dispatch is listed on the packing note. The items listed will relate to the particular order against which they were dispatched. No installation fixtures are included in the packing. This enables bolts or screws to be obtained from the site to suit the particular installation.

2. INSTALLING THE THAMES 60 DOSING UNIT(S)

CAUTION!
Only ualified Personnel must be allowed to carry out this work.

(1) Make sure that:
   (a) The vacuum regulator has been installed according to manufacturer s instructions.
   (b) The ejector has been installed according to manufacturer s instructions.

2.1 Mounting the Unit

Three types of mounting arrangements are available for the Thames 60 Dosing Unit:

(a) A wall-mounting panel (long).
(b) A wall-mounting panel (short).
(c) A floor-standing panel.

2.1.1 Wall Mounted

(1) Make sure that the surface of the wall is level and smooth and that the unit will sit vertically.

(2) Offer the Thames 60 Dosing Unit with its mounting panel to the wall and mark the drilling holes on to the wall. Alternatively, the position can be pre-drilled according to the dimensions given in Figure 3-1 views (a) and (b).

NOTE:
The bolts or wood screws should be of suitable diameter for the 10mm slots in the brackets at the rear of the panel.

(3) Drill the holes and use bolts if fixing to a frame, wood screws and Rawlplugs if fixing to a wall. Mount the panel vertically against a builder s level to ensure that the flowmeter is vertical.

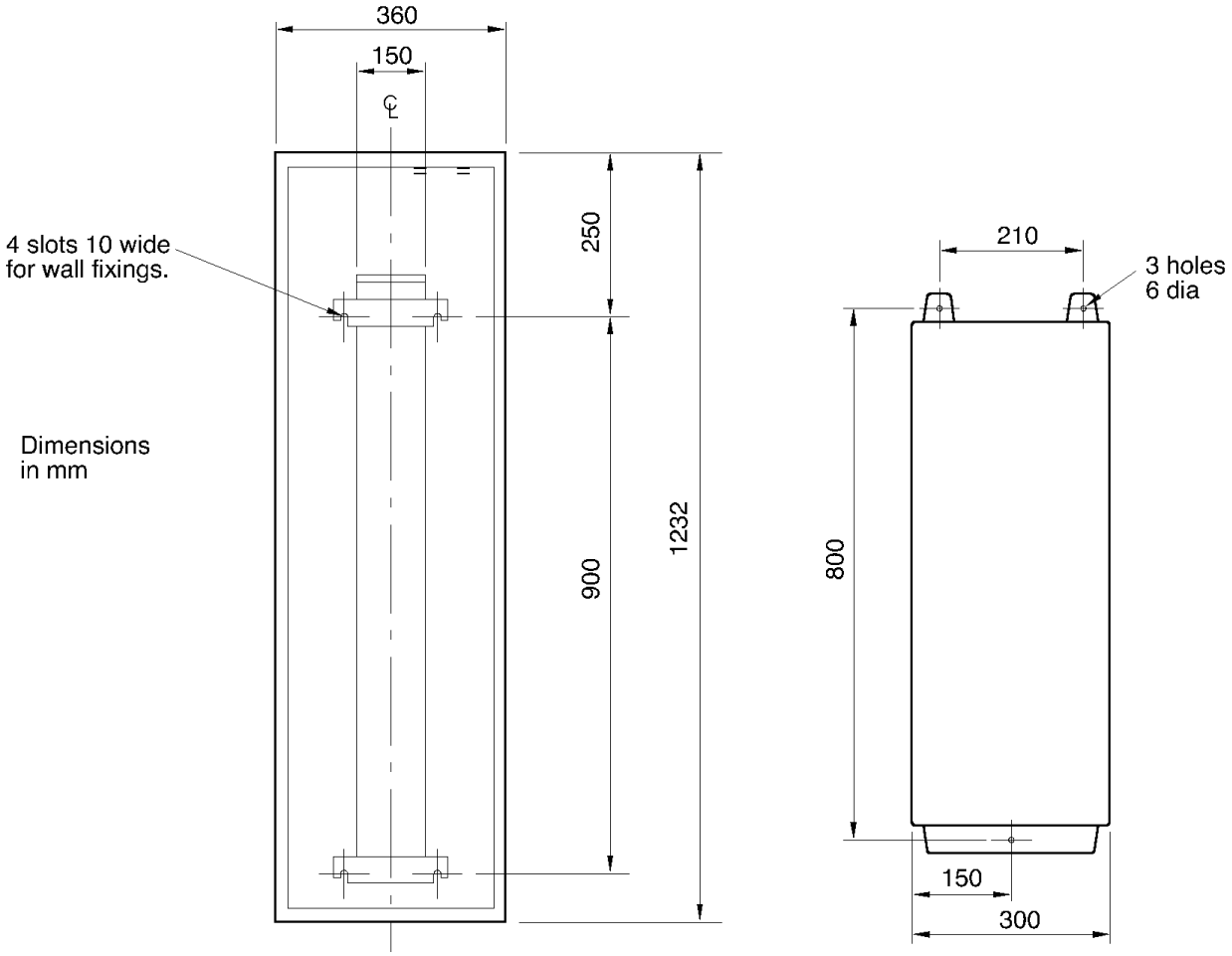

(a) Long Panel *(b) Short Panel*

Fig. 3-1 Drilling Diagram for Wall-mounting Panels

2.1.2 Floor Mounted

The floor standing type has a foot-shaped lower section which can be either free standing and secured to the floor or stood on the floor and secured against a wall or frame.

If the unit is to be mounted on a floor-standing panel:

NOTE:
The holes should be suitable to take floor bolts also suitable for the 16mm diameter holes in the foot of the panel.

(1) Position the panel where it is to stand and mark off through the base where the fixing holes are to be drilled in the floor. Alternatively, the position can be pre-drilled according to the dimensions given in the drilling diagram (see Fig. 3-2).

(2) Check the panel vertically against a builder s level in order to ensure that the flowmeter is vertical.

(3) Use the bolts and secure the unit to the floor.

If the floor-standing panel is to be secured to a wall or frame:

NOTE:
The bolts or wood screws should be of suitable diameter for the 10mm slots in the brackets at the rear of the panel.

(1) Make sure that the surface of the wall is level and smooth and that the unit will sit vertically

(2) Drill holes in the wall or frame according to the drilling diagram (see Fig. 3-2).

(3) Check the panel vertically against a builder s level in order to ensure that the flowmeter is vertical.

(4) Use bolts if fixing to a frame or wood screws and Rawlplugs if fixing to a wall and secure the unit.

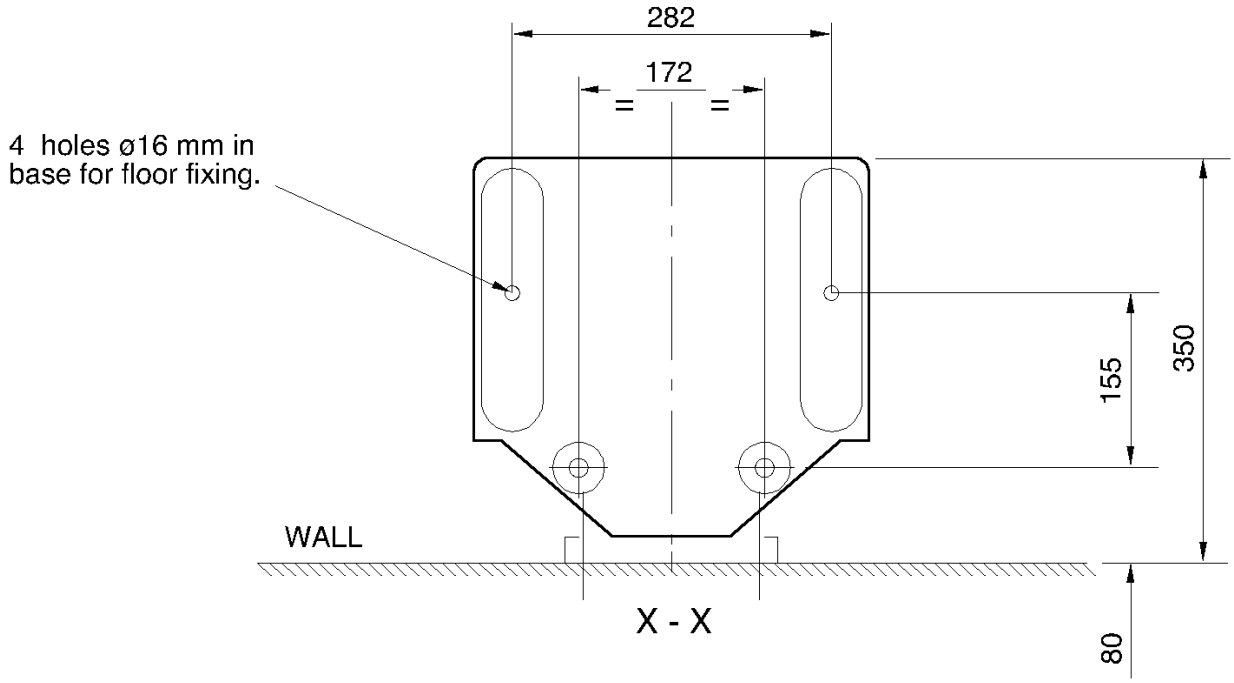

Fig. 3-2 Drilling Diagram for Floor-standing Mounting Panel

2.2 Tubing Connections

Connections for the tubing from the vacuum regulator and to the ejector require to be fitted to the unit, these are provided with the unit. For capacities from 5 to 12 Kg h, 8 mm bore flexible tubing and connections are supplied. Alternatively, in uPVC pipework can be used (not supplied).

8 mm bore tube is used to connect to the vacuum regulator and to the ejector and should be in one piece if at all possible, but if not then a double union joint is permissible.

(1) Connect the 8 mm bore tube from the Thames 60 Dosing Unit to the vacuum regulator and tighten the union by hand - tools are not necessary.

(2) Connect the 8 mm bore tube from the Thames 60 Dosing Unit to the ejector and tighten the union by hand - tools are not necessary. For capacities above 12 Kg h connections for the use of in uPVC pipework are supplied.

2.3 Vacuum Relief Valve Vent Tube (If fitted)

WARNING!

The gas used can cause serious injury. It is essential to ensure that the vent tube from the vacuum relief valve is taken outside the building and to be clear of nearby windows and doors or where people walk by outside. Leading the vent into a nearby room or other space within the building is dangerous and not acceptable.

CAUTION!
Ensure that the open end of the tubing is directed downwards to avoid rain and moisture entering the tubing. Should moisture be drawn into the unit and mix with the gas, a highly corrosive solution within the unit may result. Insect screens are available as optional items.

(1) Where a vacuum relief valve is fitted to the control valve block, run the length of tubing from the valve vent outlet to the outside of the building.

2.4 Vacuum Alarm Switch (If fitted)

Thames 60 Dosing Units that are supplied with a vacuum alarm switch require a power supply for the switch to be installed. The vacuum alarm switch unit comes with the switch and interconnecting cable pre-assembled to the bottom meter tube block. The free ends of the cables require to be connected to the power supply box which comes separately so that it may be installed where it is convenient (within 2 metres).

To install the power supply box:

(1) Drill the fixing hole positions according to the drilling diagram (see Fig. 3-3).

(2) Remove the front cover, and screw or bolt the box through the holes revealed.

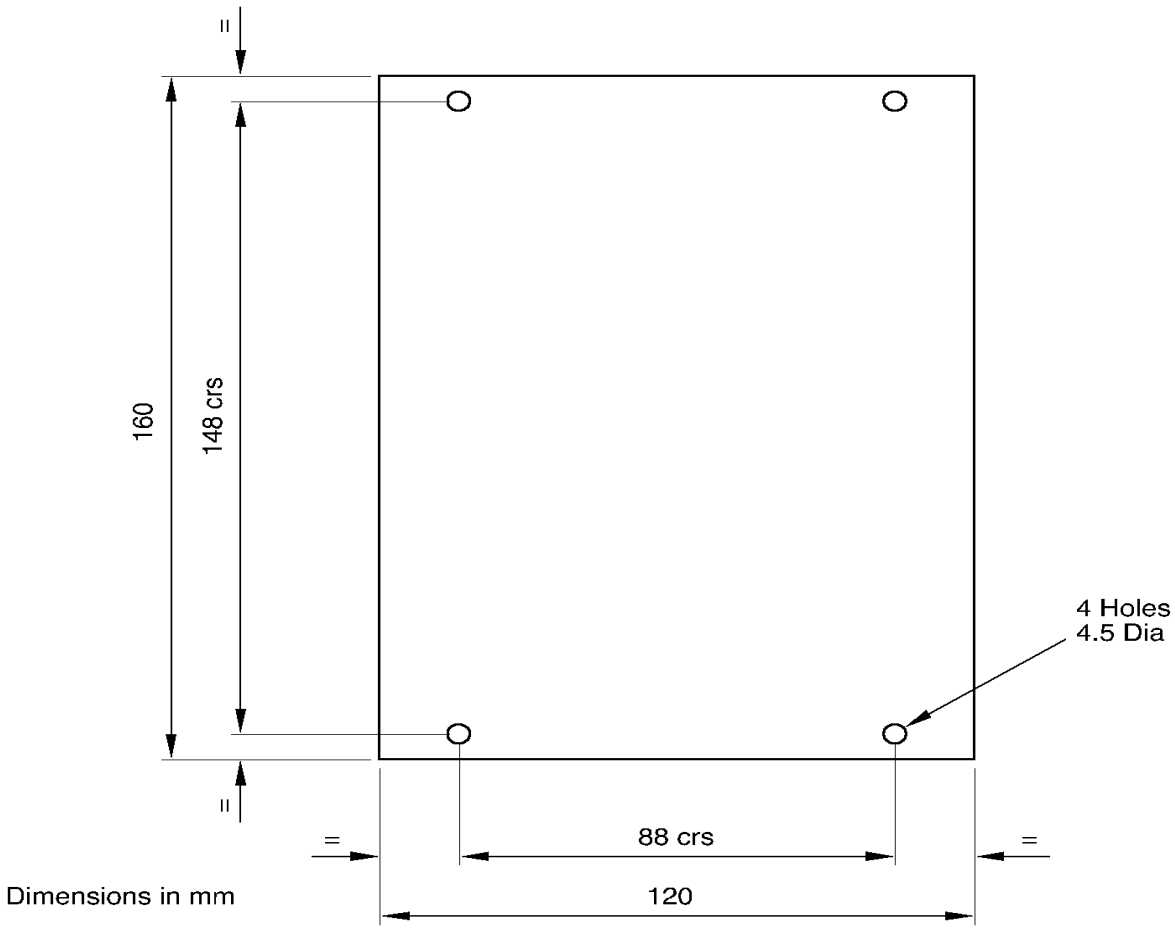

Fig. 3-3 Drilling Diagram for the Vacuum Alarm Switch Power Supply Box

WARNING!
Electrical power can kill. Some installations have external alarm systems provided with their own power supply at mains voltage which comes back to the unit for switching. Check if any connections to this unit are supplied with electrical power and isolate the power before continuing.

NOTE:
A label will have been attached to the power supply box at the factory to state for which mains voltage the power supply box has been set-up, namely, 240V or 110V AC.

Two Handbag links are to be inserted as follows:

Voltage used	Links inserted
240V AC	LK3 and LK4
120V AC	LK1 and LK2

Table 3-1 Vacuum Alarm Voltage Links

(3) Locate the two pairs of links into which the two handbag links are to be inserted for the correct voltage (see Table 3-1 above and Fig. 3-4).

(4) Connect the free ends of the lead from the switch in the control valve block to the four terminals in the power supply box under the designation **SWITCH** (see Fig. 3-4). The terminals are indicated by colours which will match the colours or labels of the free end of the lead.

(5) Connect the remote alarm indicators to the six terminals above the designation **ALARMS** . These should be connected for high vacuum or low vacuum and normally open or normally closed as suits the installation.

(6) Ensure that the power supply is switched off and connect up the three terminals above the designation **SUPPLY** .

(7) Replace the front cover, and tighten up the screws securing the cover.

(8) Switch on the electrical supply.

(9) The unit is now ready for commissioning.

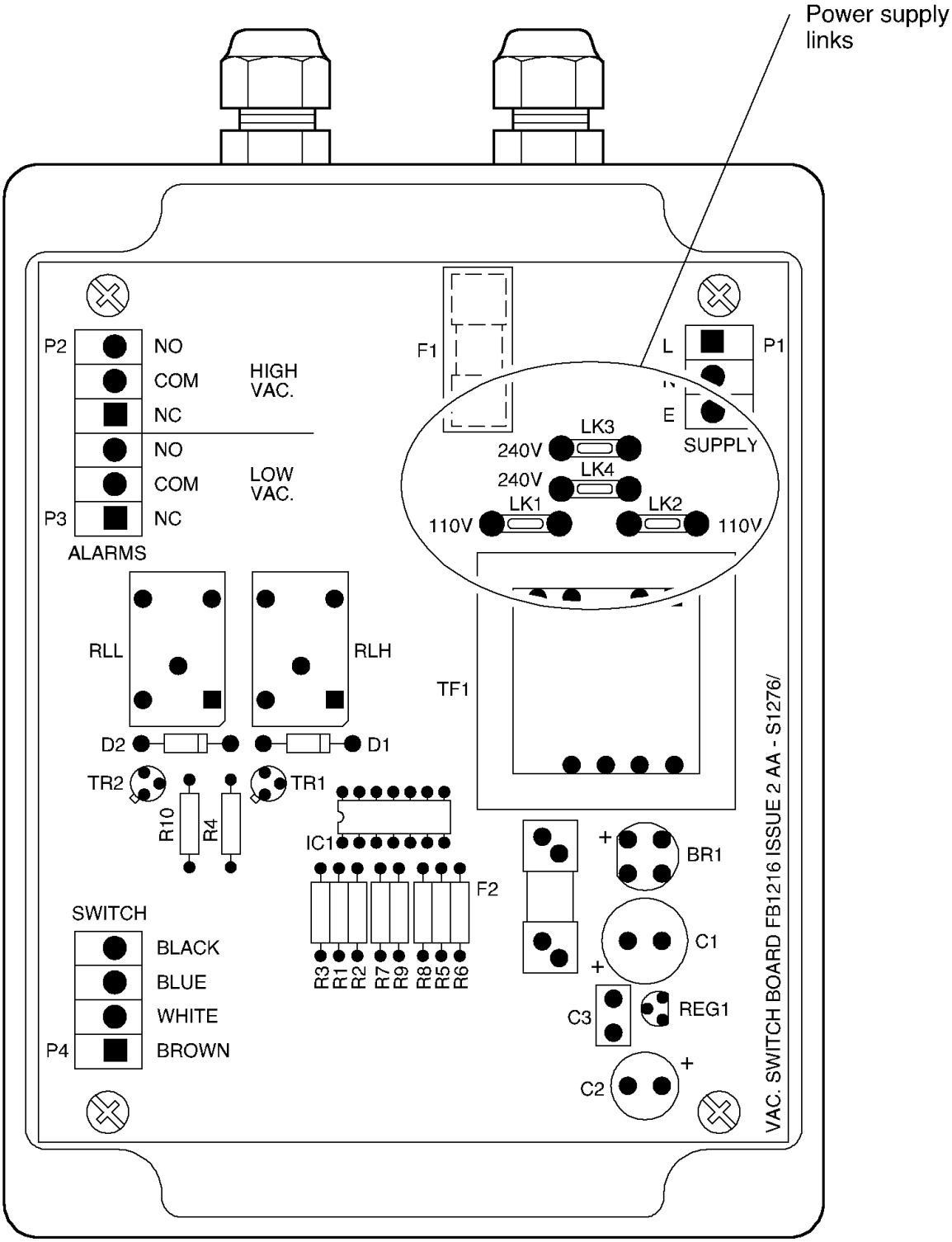

Fig. 3-4 Connections for the Vacuum Alarm Switch Power Supply Box

3. COMMISSIONING

3.1 General

The Thames 60 Dosing Unit must have been installed according to the instructions in Paragraph 2 - **INSTALLATION**, with all components fixed securely and pipe work connections tight.

In preparing these commissioning instructions it is assumed that the work will be carried out by an approved and experienced commissioning engineer accustomed to working with this type of equipment and the plant in which the Dosing Unit will be working.

3.2 Gas Regulating Function

After Installation and prior to manual operation of the Thames 60 Dosing Unit the following areas must be checked:

(a) Vacuum.
(b) Gas Leaks.

3.2.1 Checking for Vacuum

(1) Open the valve of the injection fitting at the dosing point on the water main if one is fitted.

(2) Turn on the water supply to the ejector, starting the booster pump if one is fitted, and check the ejector and pipework for leaks. Rectify as necessary.

NOTE:
If a Portacel ejector is being used it will automatically generate the vacuum to ensure correct operation of the Dosing Unit.

(3) Test that the ejector is generating vacuum. Any vacuum test accepted by a competent commissioning engineer can be used, but a basic test is to disconnect the tube somewhere that is convenient between it and the Dosing Unit and place a finger over the disconnected tube to detect a suction. This test does not prove that there is sufficient vacuum, this can only be proven when the full system is operational.

(4) If a vacuum cannot be detected, check that:

(a) The operating water pressure to the ejector is at site specification.
(b) The back pressure is as per specification.
(c) The booster pump, if fitted, is running.
(d) All relevant valves in the main and the loop are open.
(e) The ejector nozzle is not blocked or damaged. (This will mean removing the ejector from the loop after stopping the pump and isolating the loop in order to do so).

3.2.2 Checking for Gas Leaks

NOTE:
For safety, it is recommended that during commissioning of multi-cylinder drum header systems, pressure tests and leak tests are carried out using nitrogen or dry air, and not the gases to be used for dosing.

With the ejector creating a vacuum the gas cylinder valve(s) may be opened and the system tested for leaks. Gas leak tests must not be attempted until the ejector is working properly because should there be a leak in the system then the ejector must draw in air and the gas extracted safely through the ejector rather than be allowed to escape into the work area.

WARNING!

The gases used can kill. The pipework between the vacuum regulator and the gas cylinder does not constitute part of the Dosing Unit and is not covered by this manual. Any leak between the vacuum regulator and the gas cylinder(s) will require to be rectified with reference to the relevant manufacturer's manual.

WARNING!

The gases used can kill. Do not open the gas valve unless there is sufficient vacuum. Breathing apparatus and protective clothing must be worn when testing for leaks and the correct gas detecting procedure carried out as defined in the site instructions and the gas manufacturer's instructions.

NOTE:
Any recognised method of leak testing accepted by a competent commissioning engineer can be used.

(1) The gas supply may now be turned on.

(2) Using a dry air or nitrogen supply pressurise the complete gas system up to a maximum pressure of 16 bar gauge and check all pipework and connections for leaks using the chosen recognised leak test.

(3) On completion of the pressure test connect up the relevant operational gas supply cylinder.

(4) If any leaks have been located and repaired, and the Thames 60 Dosing Unit and pipework are secure, the manual unit is considered to be commissioned.

(5) If the unit is supplied with an AVP or FPC refer to the relevant Manual to Install and Commission the AVP (Part No. 41313) or FPC (Part No. 41314).

Chapter 4

Operating Instructions

Contents

Para.		Page
	INTRODUCTION	**4.3**
1.	**GENERAL**	**4.6**
2.	**START-UP**	**4.6**
3.	**OPERATION**	**4.6**
4.	**SHUTDOWN**	**4.7**
4.1	Shutdown up to 24 Hours	4.7
4.2	Shutdown over 24 Hours	4.7

ILLUSTRATIONS

Fig. No.		Page
4-1	Thames 60 Dosing Unit Principal Components	4.5

INTRODUCTION

This Chapter gives the procedures needed to operate the Thames 60 Dosing Unit.

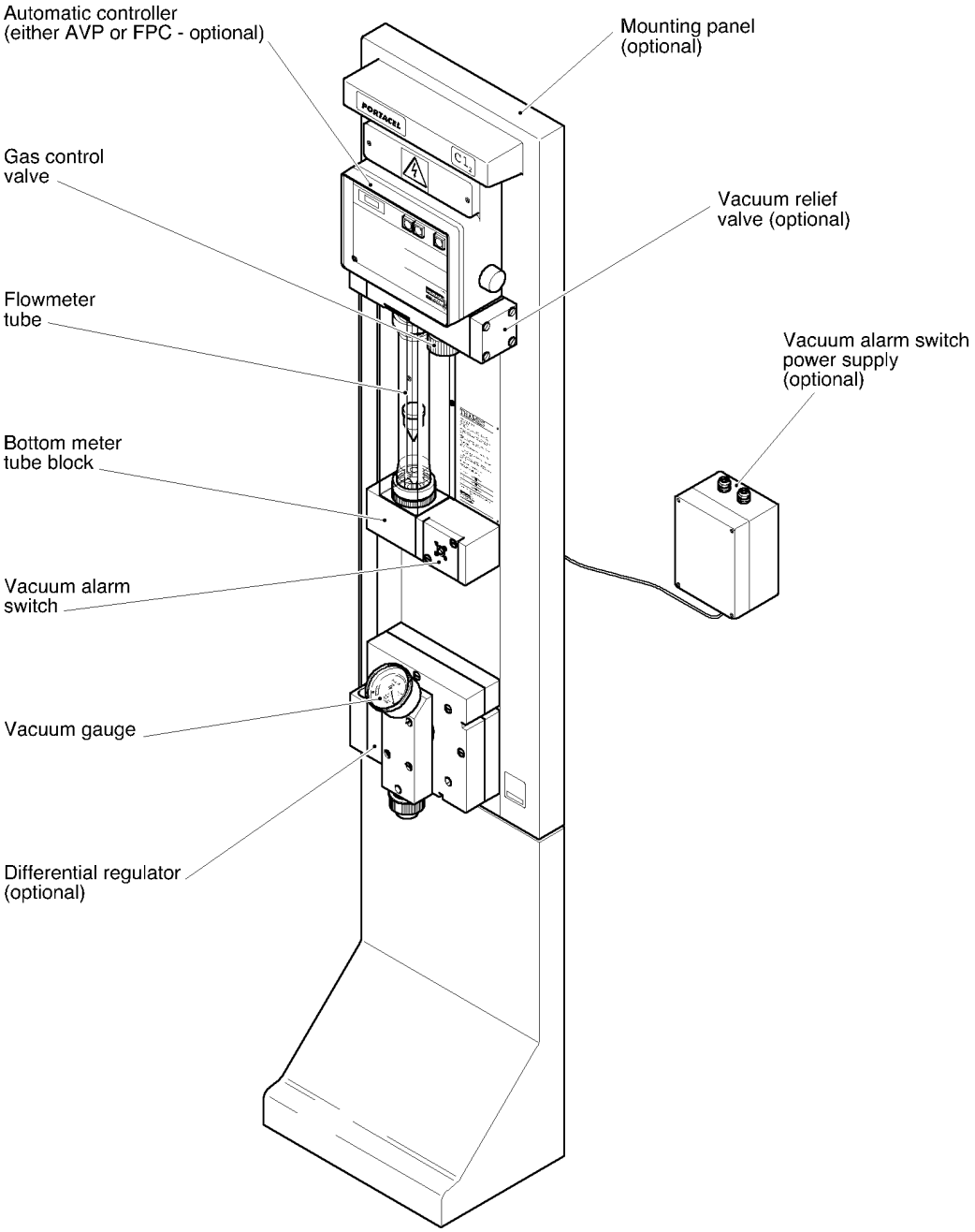

Fig. 4-1 Thames 60 Dosing Unit Principal Components

1. GENERAL

The procedures detailed in this Chapter are the procedures to operate the Thames 60 Dosing Unit (see Figure 4-1) manually from the front panel. For the detailed procedures required to operate the unit using the automatic valve positioner (AVP) refer to Chapter 6 - Options Chapter (if the AVP is fitted).

2. START-UP

WARNING!

If incorrectly used this equipment can cause severe injury. Those who use the equipment should be trained in its proper use and should have read and understood the safety instructions contained in this manual before attempting to operate or adjust the equipment.

WARNING!

The gas used can cause serious injury. Before switching the gas on refer to the safety precautions required in the manufacturer's data sheets and the site operating instructions.

To start the Thames 60 Dosing Unit carry out the following procedure:

(1) At the Thames 60 Dosing Unit turn the manual control knob to align the yellow dot on the manual control knob with the line on the valve block (ie. valve closed).

(2) Switch the vacuum regulator heater to ON and wait 30 minutes.

(3) Open the valve on the ejector fitting (if a valve is fitted).

(4) Make sure that water pressure is supplied to the ejector.

(5) Turn the gas pressure supply to the vacuum regulator to ON.

3. OPERATION

NOTE:
Before the operator starts the Thames 60 Dosing Unit the level of dose required must be calculated.

The manual operation of the Thames 60 Dosing Unit is carried out with the operator at the manual control of the unit. To operate the unit:

(1) Carry out the Start-up procedures detailed in paragraph 2.

NOTE:
The gas flow meter may be fitted with a flat-topped float or a ball. The gas flow reading is taken by aligning the top of the float, or the horizontal diameter of the ball, by eye with the graduation marks on the Flowmeter Tube.

(2) Turn the manual control knob counter clockwise (looking up at the knob) to open the valve and set the gas flow to the required setting as indicated by the flowmeter tube.

NOTE:
To adjust gas flow:

Reduce	-	Turn clockwise.
Increase	-	Turn counter-clockwise.

(3) Adjust the manual control knob as required to maintain the correct gas flow.

4. SHUTDOWN

Two procedures can be used to shutdown the Thames 60 Dosing Unit, A procedure for short-term shut down up to 24 hours and a procedure for over 24 hours.

4.1 Shutdown up to 24 Hours

(1) After the motive water pump has ceased operating, close the water supply to the ejector.

(2) As the vacuum reduces the vacuum regulator will close automatically shutting off the gas supply.

4.2 Shutdown Over 24 Hours

(1) After the motive water pump has ceased operating, close the water supply to the ejector.

(2) As the vacuum reduces the vacuum regulator will close automatically shutting off the gas supply.

(3) Shut off the gas supply at the drum storage cylinder.

(4) Wait until the flowmeter shows zero flow then close the water supply valves to the ejector.

(5) Switch the vacuum regulator heater to OFF.

(6) At the Thames 60 Dosing Unit turn the manual control knob clockwise to align the yellow dot on the manual control knob with the line on the valve block (ie. valve closed).

Chapter 5

Maintenance

Contents

Para.		Page
	INTRODUCTION	**5.3**
1.	**GENERAL**	**5.5**
2.	**REMOVAL AND REPLACEMENT**	**5.6**
2.1	Gas Control Valve	5.6
2.1.1	Removal Procedure	5.6
2.1.2	Replacement Procedure	5.7
2.2	Differential Regulator	5.8
2.2.1	Removal Procedure	5.8
2.2.2	Replacement Procedure	5.8
2.3	Vacuum Switch	5.9
2.3.1	Removal Procedure	5.9
2.3.2	Replacement Procedure	5.9
2.4	Meter Tube and Bottom Block	5.10
2.4.1	Removal Procedure	5.10
2.4.2	Replacement Procedure	5.10
3.	**FAULT FINDING**	**5.10**
3.1	Flowmeter Fails to Indicate Gas Flow	5.11
3.2	Insufficient Ejector Vacuum	5.12
3.3	Gas Flow Through Meter Cannot Be Controlled	5.13
3.4	Flowmeter Indicates Flow when Gas is Turned Off	5.14
3.5	Gas Discharges from Vent of Portacel Vacuum Regulator	5.14
3.6	Flow Indicated when Ejector Operating Water Turned Off	5.14
3.7	Water in the Flowmeter	5.15
4.	**SERVICE OF MANUAL CHLORINATOR & SULPHONATOR**	**5.16**
5.	**SERVICE OF AUTOMATIC CHLORINATOR & SULPHONATOR**	**5.18**
6.	**SERVICE OF MANUAL AMMONIATOR**	**5.21**
7.	**SPARE PARTS**	**5.23**

ILLUSTRATIONS

Fig. No.		Page
5-1	Control Valve AAS927 with Vacuum Relief Valve	5.25
5-2	Control Valve AAS1272 without Vacuum Relief	5.27
5-3	Vacuum Alarm Switch AAS1327 (for units with a Differential Regulator)	5.29
5-4	Vacuum Alarm Switch AAS1269 (for units with a Differential Regulator)	5.31
5-5	Vacuum Alarm Switch AAS1486 (for units without a Differential Regulator)	5.33
5-6	Differential Regulator AAS683	5.37
5-7	Bottom Meter Block AAS680	5.39
5-8	Bypass Tube (only fitted on units with a Differential Regulator)	5.41
5-9	Flowmeter Tube	5.46

TABLES

Table No.		Page
5-1	Spares Kit Manual Type AAS1412	5.16
5-2	Spares Kit Manual Comprehensive Type AAS1413	5.17
5-3	Spares Kit Automatic Type AAS1414	5.18
5-4	Spares Kit Automatic (without Differential Regulator) Type AAS1491	5.20
5-5	Spares Kit Manual Comprehensive Type AAS1448	5.21
5-6	Manual Control Valve with Vacuum Relief Valve Part Numbers (Fig. 5-1)	5.23
5-7	Valve Stem Part Numbers (Figs. 5-1 and 5-2)	5.24
5-8	Manual Control Valve without Vacuum Relief Valve Part Numbers (Fig. 5-2)	5.26
5-9	Vacuum Alarm Switch AAS1327 Part Numbers (Fig. 5-3)	5.28
5-10	Vacuum Alarm Switch AAS1269 Part Numbers (Fig. 5-4)	5.30
5-11	Vacuum Alarm Switch AAS1486 Part Numbers (Fig. 5-5)	5.32
5-12	Differential Regulator AAS683 Part Numbers (Fig. 5-6)	5.34
5-13	Bottom Meter Block AAS680 Part Numbers (Fig. 5-7)	5.38
5-14	Bypass Tube Part Numbers (Fig. 5-8)	5.40
5-15	Flowmeter Tube 60 Kg h Cl_2 and SO_2 - Part Numbers (Fig. 5-9)	5.42
5-16	Flowmeter Tube 40 Kg h Cl_2 SO_2 and 20 Kg h NH_3 Part Numbers (Fig. 5-9)	5.42
5-17	Flowmeter Tube 30 Kg h Cl_2 SO_2 and 15 Kg h NH_3 Part Numbers (Fig. 5-9)	5.43
5-18	Flowmeter Tube 20 Kg h Cl_2 SO_2 and 10 Kg h NH_3 Part Numbers (Fig. 5-9)	5.43
5-19	Flowmeter Tube 15 Kg h Cl_2 SO_2 and 7.5 Kg h NH_3 Part Numbers (Fig. 5-9)	5.44
5-20	Flowmeter Tube 12 Kg h Cl_2 SO_2 and 6.0 Kg h NH_3 Part Numbers (Fig. 5-9)	5.44

INTRODUCTION

This Chapter details the maintenance that can be carried out on the Thames 60 Dosing Unit. The fault finding is confined to a few procedures and is shown in flow charts. The Chapter also lists the spares kits available for each of the Thames 60 Dosing Units with respect to the gas being used and the options fitted to the unit. Each kit has a list of parts referring to the illustrations identifying the position that each of the parts are fitted. All available spares are identified in tables and referenced in the illustrations. From the information a trained and qualified Technician will be able to dismantle and service the Thames 60 Dosing Unit.

1. GENERAL

WARNING!

Only trained and qualified Technicians should dismantle any assemblies.

WARNING!

The gas used can cause serious injury. For the safety precautions required refer to the gas supplier's/ manufacturer's data sheets and the site operating instructions.

Maintenance is restricted to the checking of the items mentioned in this Chapter, the repair by replacement of the principal components listed in Chapter 2 and the replacement of the items supplied in the spares kits. The Safety Precautions mentioned in this Chapter and in the Safety Precautions section at the front of this Manual must be carried out at all times.

2. REMOVAL AND REPLACEMENT

2.1 Gas Control Valve

WARNING!

Only trained and qualified Technicians should dismantle any assemblies.

WARNING!

The gas used can cause serious injury. For the safety precautions required refer to the gas supplier's/ manufacturer's data sheets and the site operating instructions.

WARNING!

The system must be purged of all gas before the equipment is dismantled.

When removing items of the control valve and vacuum relief valve note the orientation of valves, seals and diaphragm to assist in the replacement procedure. to remove the control valve for maintenance, carry out the following:

2.1.1 Removal Procedure

(1) Referring to the site operating instructions isolate the gas supply to the vacuum regulator supplying the unit.

(2) Allow the unit to operate under vacuum (ie with the ejector running) to draw any remaining gas through the pipework.

(3) With the ejector running open the pipework on the vacuum side of the vacuum regulator and as close to the regulator as possible to purge the pipework of gas.

(4) Switch off the ejector.

(5) Using a screwdriver remove and retain the two screws securing the by-pass tube to the control valve, and the single screw securing the by-pass tube to the differential regulator. Pull the by-pass tube from both the control valve and differential regulator.

(6) Using a screwdriver, remove and retain the four screws retaining the vacuum relief valve, or the blanking plate, to the side of the control valve.

(7) Remove the vacuum relief valve from the control valve.

(8) Using the screwdriver, remove and retain the single screw retaining the control knob to the control valve and remove the control knob and shaft.

(9) Withdraw the control valve stem, control valve operating orifice and seals from the control valve.

(10) Refer to the spares kits listed in this Chapter and replace seals as required with the correct seals for the gas being used.

2.1.2 Replacement Procedure

When replacing the valve make sure that the items are replaced in the correct orientation as noted during removal. To replace the control valve:

(1) Fit all new O ring seals. Do not lubricate the seal fitted to the valve stem.

(2) With the control valve orifice pushed to the closed position against the seal on the control valve stem, carefully insert the stem into the assembly.

(3) Align the control valve stem gearing with the control knob gearing by:
   (a) Pushing the control valve stem into the valve body until the stem sticks out from the face of the body by approx. 1.5mm.
   (b) Align the yellow dot on the control knob with the line on the block.
   (c) Insert the control knob into the gearing on the control valve stem.

(4) Push the by-pass tube into position to make sure that the valve orifice is correctly seated.

(5) Using the screwdriver insert the single securing screw retained in the removal procedure step (8).

(6) Replace the vacuum relief valve component parts, or the blanking plate, and secure with the four screws retained in the removal procedure step (6).

(7) Replace the by-pass tube to the control valve and differential regulator secure with the three screws retained in step (5).

(8) Seal all vacuum pipework disturbed in the removal procedure step (3).

(9) Carry out a gas leak check (refer to Chapter 3).

2.2 Differential Regulator

2.2.1 Removal Procedure

(1) Referring to the site operating instructions isolate the gas supply to the vacuum regulator supplying the unit.

(2) Allow the unit to operate under vacuum (ie with the ejector running) to draw any remaining gas through the pipework.

(3) With the ejector running open the pipework on the vacuum side of the vacuum regulator and as close to the regulator as possible to purge the pipework of gas.

(4) Switch off the ejector.

(5) Using a screwdriver, remove and retain the single screw securing the by-pass tube to the differential regulator. Pull the by-pass tube from the differential regulator.

(6) Unscrew and disconnect the outlet pipe connector from the outlet block.

(7) Detach the regulator assembly from the mounting panel by releasing the four attachment bolts. Releasing these bolts will not release the front and back bodies and internal components.

(8) Remove to a clean area and separate the front and back bodies and internal components.

(9) Unfasten the remaining retaining bolts connecting the two bodies.

(10) Release the four screws securing the outlet block to the front body and the single screw holding the elbow by-pass to the front body.

(11) Remove and discard all old seals. Examine all other components for damage and deterioration and replace as necessary. Pay particular attention to the diaphragms and valve bores.

2.2.2 Replacement Procedure

When reassembling the differential regulator make sure that the items are replaced in the correct orientation as noted during removal. Proceed as follows:

(1) Fit new seals to the elbow by-pass and resecure the elbow to the outlet block.

(2) Fit new seals to the outlet block and front of the front body. Position the internal valve then secure block and body together.

(3) Locate the diaphragm assembly components in their correct positions, as noted during removal, and bring together the front and back bodies and secure with four bolts.

(4) Secure the bodies to the mounting panel using the remaining four bolts.

(5) Reconnect the feedback hose and the outlet pipe, utilising a new O ring seal in the connector.

(6) Carry out a gas leak check (refer to Chapter 3).

2.3 Vacuum Switch

2.3.1 Removal Procedure

(1) Referring to the site operating instructions isolate the gas supply to the vacuum regulator supplying the unit.

(2) Allow the unit to operate under vacuum (ie with the ejector running) to draw any remaining gas through the pipework.

(3) With the ejector running, open the pipework on the vacuum side of the vacuum regulator and as close to the regulator as possible, to purge the pipework of gas.

(4) Switch off the ejector.

(5) Open the vacuum alarm switch connector box, then tag and disconnect the alarm switch connectors.

(6) Remove the meter tube as described in paragraph 2.4.1 steps (1) to (6).

(7) Slacken off the mounting bolts but do not remove them if only the vacuum alarm switch is being removed.

(8) Remove the screws securing the alarm switch to the mounting panel. Withdraw the switch body side-ways to release the connector between it and the bottom meter block. Recover the connector and O ring seals.

(9) Remove the switch to a clean area for further disassembly.

(10) Release the cable gland nuts.

(11) Release the two screws securing the switch cap. Remove the cap and, from within, the switch unit (with its cable), spacer, diaphragm assembly and the spring.

(12) Using the special tools (Part No. TE65 and TE66) remove the diaphragm nut from the diaphragm bolt and release the diaphragm.

2.3.2 Replacement Procedure

(1) Examine all components for damage and deterioration. Replace any faulty items and O ring seals.

(2) Reassembly is a reversal of the removal procedure.

(3) Ensue when refitting the switch unit, that its orientation with respect to the cable, and to the high and low adjustment screws is correct.

(4) When fitting the switch body to the bottom meter block connector, lubricate the O rings with chlorofluorocarbon grease.

(5) If the switch unit has been renewed or the adjustment screws disturbed, the high and low alarm settings will have to be reset to the desired settings.

(6) Carry out a gas leak check (refer to Chapter 3).

2.4 Meter Tube and Bottom Block

2.4.1 Removal Procedure

(1) Referring to the site operating instructions isolate the gas supply to the vacuum regulator supplying the unit.

(2) Allow the unit to operate under vacuum (ie with the ejector running) to draw any remaining gas through the pipework.

(3) With the ejector running, open the pipework on the vacuum side of the vacuum regulator and as close to the regulator as possible, to purge the pipework of gas.

(4) Switch off the ejector.

(5) Remove the screws holding the meter tube cover (if fitted) and remove the cover.

(6) Turn the knurled ring at the base of the tube to release the clamping effect on the tube and when free, withdraw the meter tube.

(7) Remove the mounting panel securing screws.

(8) Depending on optional system equipment fitted, release the connections between the meter block and the optional items.

(9) Separate the knurled ring and meter connector from the meter block.

2.4.2 Replacement Procedure

(1) Examine all components for damage and deterioration. Replace any faulty items. Renew all O ring seals. Including those fitted on connectors to optional equipment and at the top of the meter tube.

(2) Reassembly is a reversal of the removal procedure.

(3) Carry out a gas leak check (refer to Chapter 3).

3. FAULT FINDING

The following procedures represent a selection of the main checks that can be carried out. As with all Fault Finding the success of the task will rely heavily on the skill of the Engineer at the site. The fault diagnosis section is divided into flow charts. The flow charts are to be used to remind an experienced engineer of the items to be checked for some faults that may occur. None of the flow charts give detailed procedures for removal and replacement.

3.1 Flowmeter Fails to Indicate Gas Flow

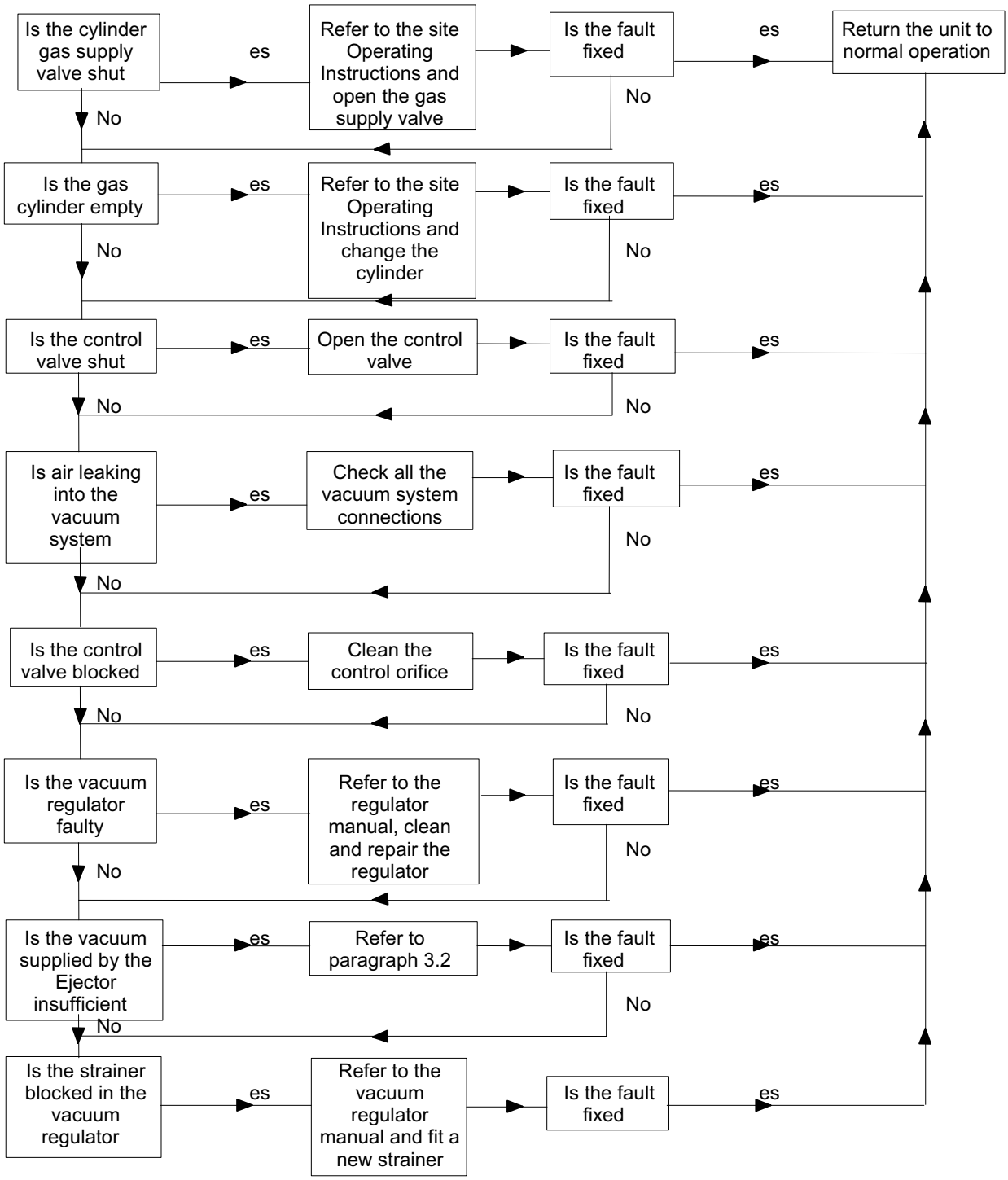

3.2 Insufficient Ejector Vacuum

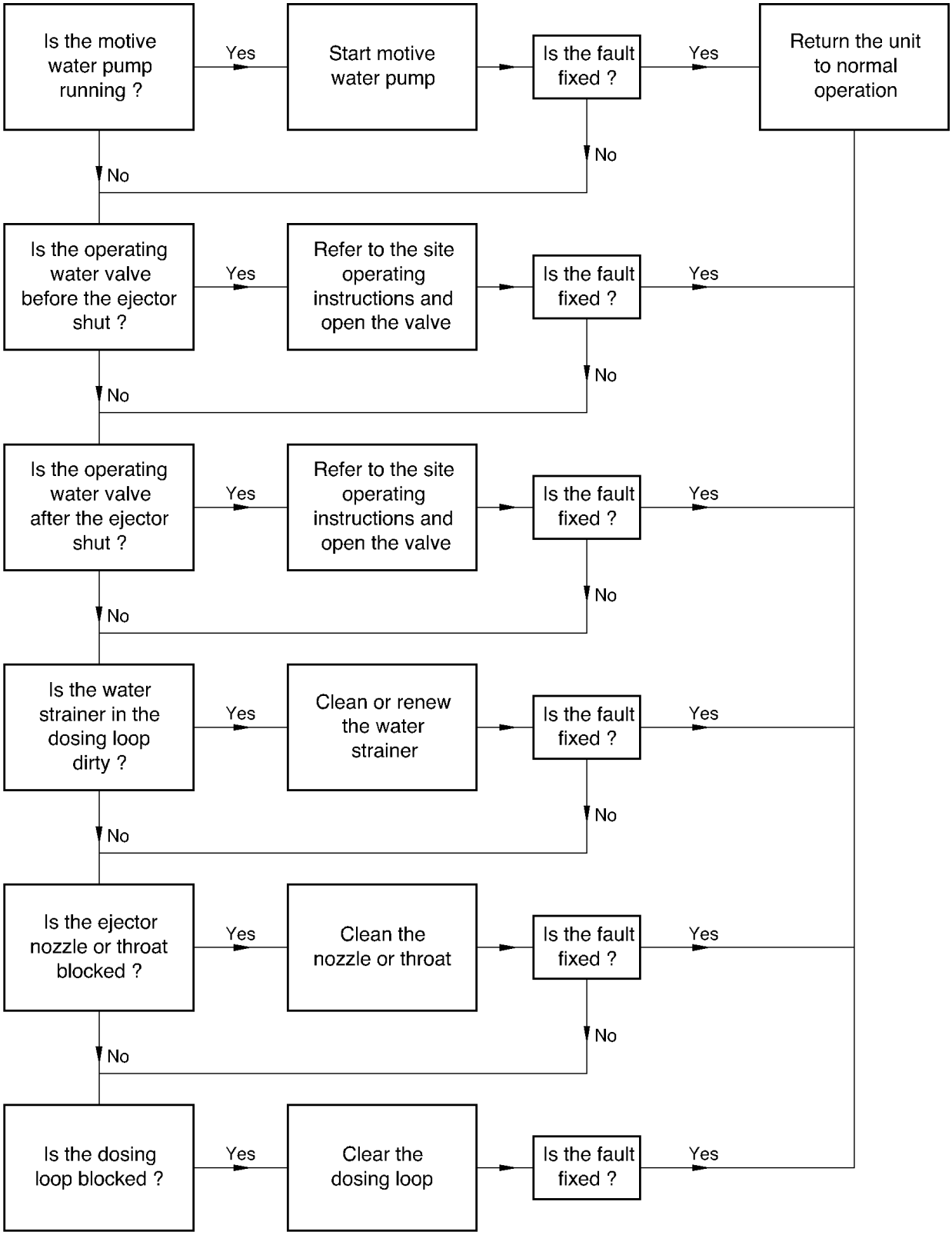

3.3 Gas Flow Through Meter Cannot Be Controlled

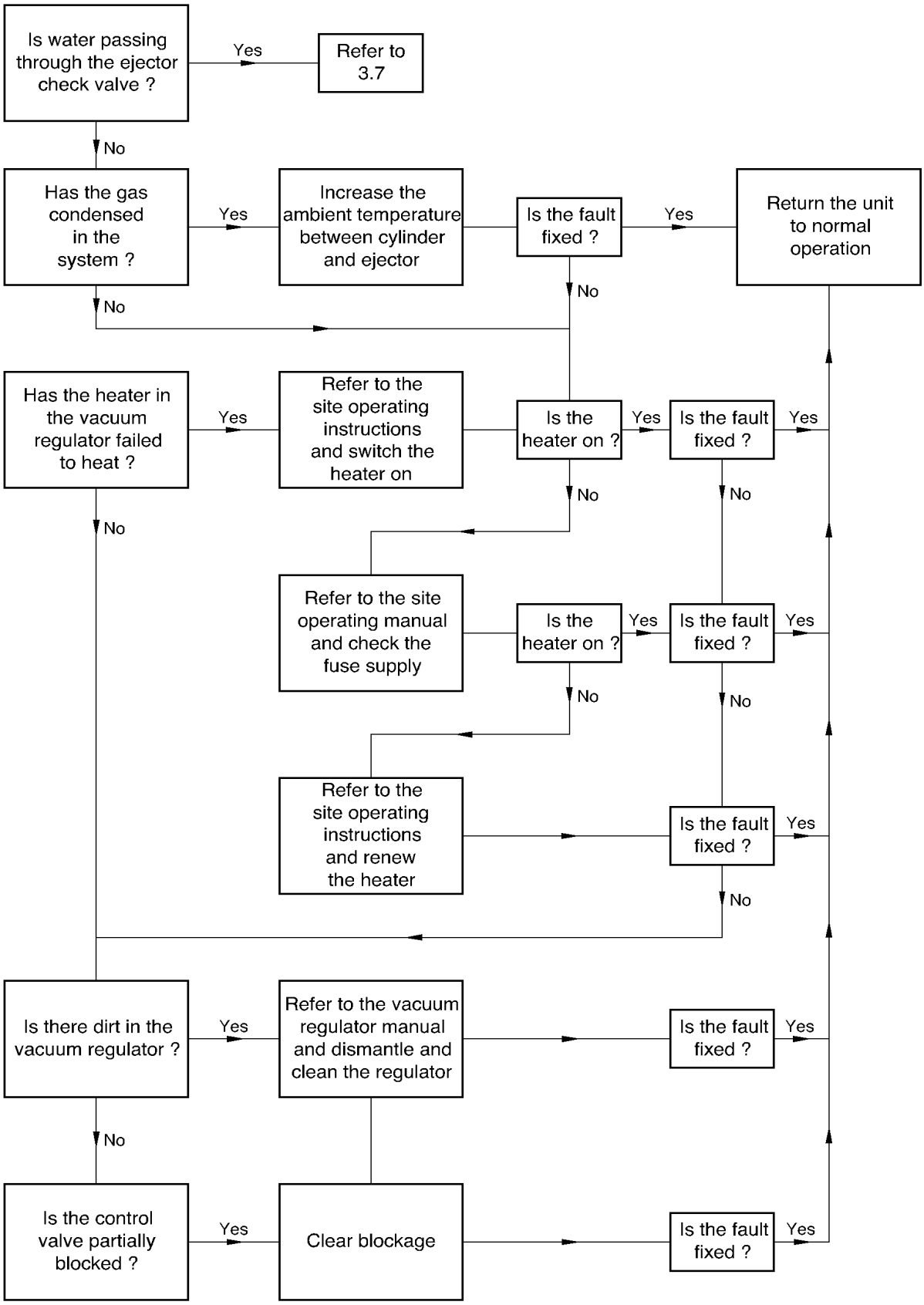

3.4 Flowmeter Indicates Flow when Gas is Turned Off

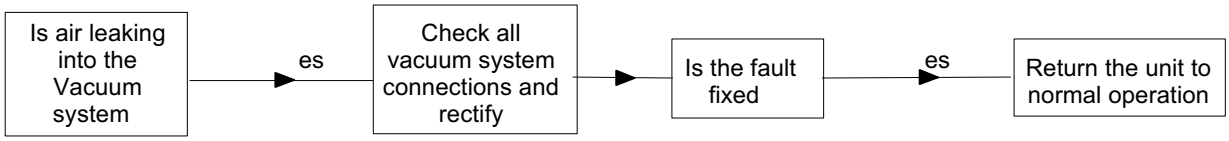

3.5 Gas Discharges from Vent of Portacel Vacuum Regulator

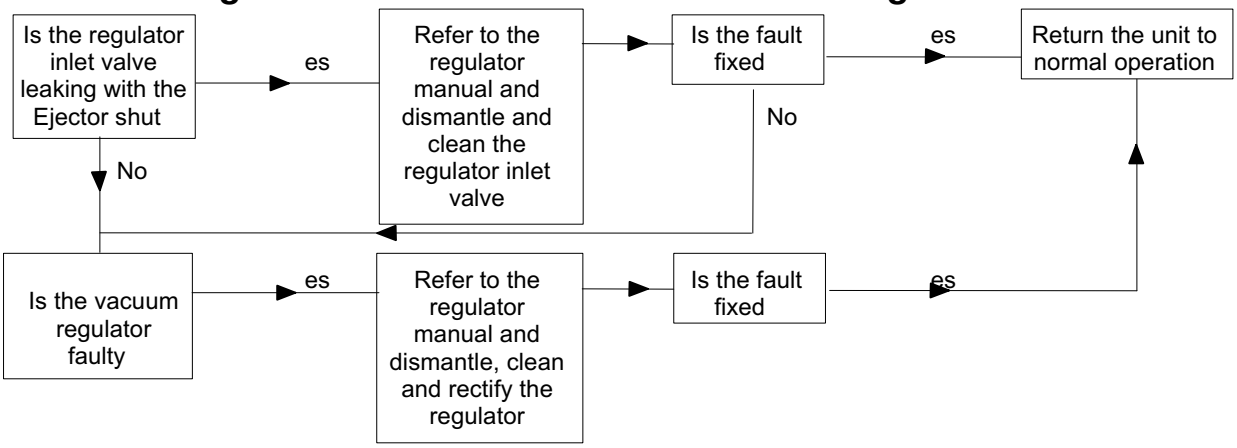

3.6 Flow Indicated when Ejector Operating Water Turned Off

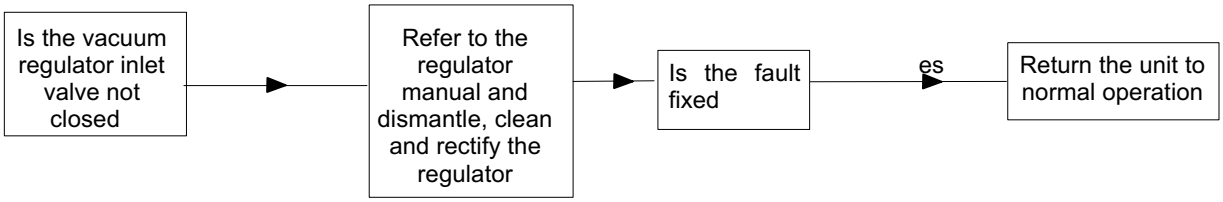

3.7 Water in the Flowmeter

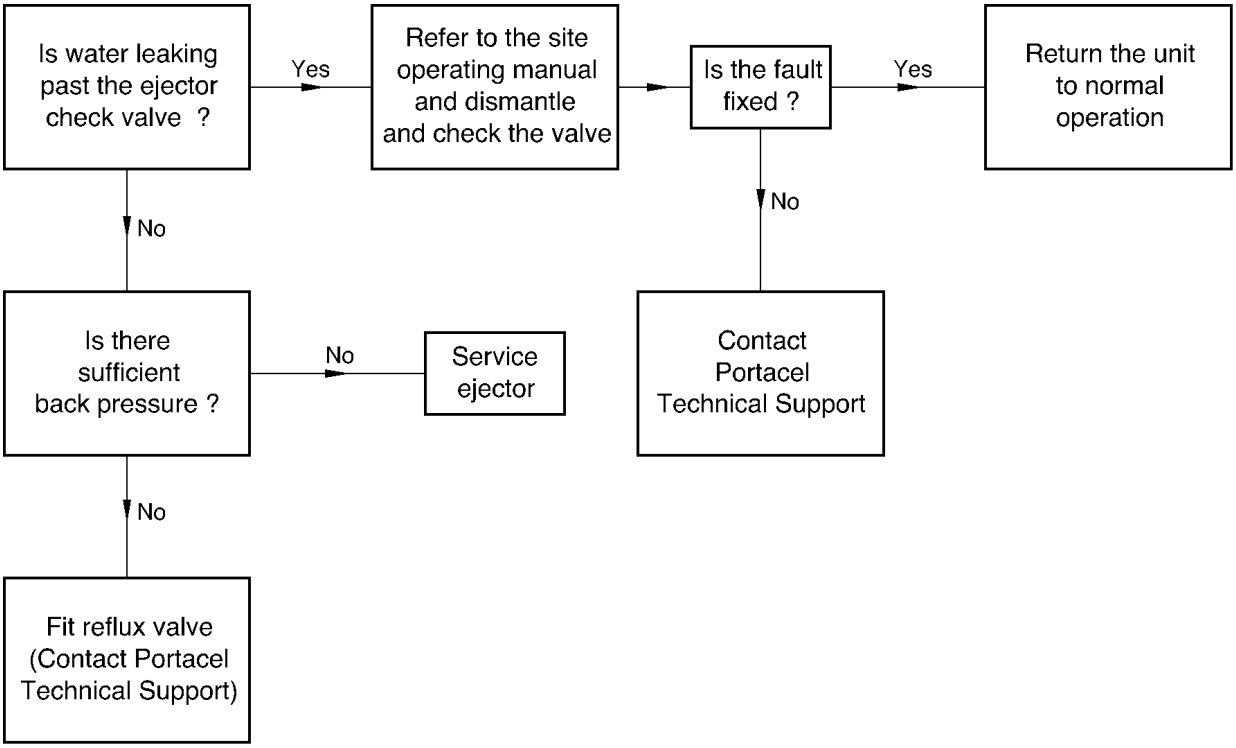

4. SERVICE OF MANUAL CHLORINATOR & SULPHONATOR

This section identifies the spares kits available to assist with the maintenance of the Thames 60 Dosing Unit used to dispense chlorine and sulphur dioxide gases. The information is given in the form of a listing of the items comprising the kit, together with drawings from where the items can be identified.

The drawings are in exploded assembly form that not only makes for ready identification of the items and where they are placed within the assembly, but also should assist a qualified technician to dismantle the assembly in order to gain access to the item.

WARNING!

Only trained and qualified Technicians should dismantle assemblies.

Table 5-1 Spares Kit Manual Type AAS1412

Fig/Item No.		Description	Part No.	Quantity
5-1 2	8	Orifice	OA30	1
5-1 2	12	O ring	OB52	1
5-2	22	O ring	OB58	1
5-1 2	3	O ring	OB89	1
5-6 5-8	2 1 3	O ring	OB100	4
5-6	26	O ring	OB101	2
5-9	5	O ring	OB102	1
5-7 5-9	5 3 7	O ring	OB103	3
		O ring	OB104	2
5-6 5-1 2	22 6	O ring	OB106	1
5-1 2	17	O ring	OB109	1
5-7 5-1 2	7 10	O ring	OB114	2
5-7	12	O ring	OB115	1
		O ring	OB125	2
5-1 2	18	O ring	OB129	1
5-1 2	7	O ring	OB133	1
5-9	3 7	O ring	OB139	2

Table 5-2 Spares Kit Manual Comprehensive Type AAS1413

Fig/Item No.		Description	Part No.	Quantity
5-3 4 5-1	8 24	Diaphragm	DB36	2
5-6	12	Diaphragm	DB38	1
5-1	31	Filter	FA41	1
5-1 2	8	Orifice	OA30	1
5-1 2	12	O ring	OB52	1
5-1	26	O ring	OB80	1
5-1 2	3	O ring	OB89	1
5-6 5-8	2 1 3	O ring	OB100	6
5-6	26	O ring	OB101	4
5-9	5	O ring	OB102	1
5-7 5-9	5 3 7	O ring	OB103	3
		O ring	OB104	2
		O ring	OB105	2
5-6 5-1 2	22 6	O ring	OB106	2
5-1 2	17	O ring	OB109	1
5-6	13	O ring	OB110	1
5-6	7	O ring	OB112	1
5-7 5-1 2	7 10	O ring	OB114	2
5-3 5-5 5-7	11 13 11 13 12	O ring	OB115	2
5-6	11	O ring	OB116	1
5-6	30	O ring	OB117	1
5-9	3	O ring	OB125	2
5-1 2	18	O ring	OB129	1
5-1 2	7	O ring	OB133	1
5-9	3 7	O ring	OB139	2
5-6	23	Seat	SD101	1

5. SERVICE OF AUTOMATIC CHLORINATOR & SULPHONATOR

This section identifies the spares kits available to assist with the maintenance of the Thames 60 Dosing Unit when automated and used with chlorine and sulphur dioxide. The information is given in the form of a listing of the items comprising the particular spares kits together with drawings on which the items can be identified.

The drawings are in exploded assembly form that not only makes for ready identification of the items and where they are within the assembly, but also should assist a competent technician to dismantle the assembly in order to gain access to the item.

WARNING!

Only trained and qualified Technicians should dismantle assemblies.

Table 5-3 Spares Kit Automatic Type AAS1414

Fig/Item No.		Description	Part No.	Quantity
5-3 5	8	Diaphragm	DB36	2
5-6	12	Diaphragm	DB38	1
5-1	31	Filter	FA41	1
5-1 2	8	Orifice	OA30	1
AVP FPC		O ring	OB15	1
5-1 2	12	O ring	OB52	1
5-1	26	O ring	OB80	1
5-1 2	3	O ring	OB89	1
5-6 5-8	2 1 3	O ring	OB100	6
5-6	26 28	O ring	OB101	4
5-9	5	O ring	OB102	1
5-7 5-9	5 3 7	O ring	OB103	3
		O ring	OB104	2
		O ring	OB105	2
5-6 5-1 2	22 6	O ring	OB106	2
5-1 2	17	O ring	OB109	1
5-6	13	O ring	OB110	1
5-6	7	O ring	OB112	1

Fig/Item No.	Description	Part No.	Quantity
5-1 2 10 5-7 7	O ring	OB114	2
5-3 5 11 13 5-7 12	O ring	OB115	2
5-6 11	O ring	OB116	1
5-6 30	O ring	OB117	1
5-9 3	O ring	OB125	2
AVP FPC	O ring	OB126	4
5-1 2 7	O ring	OB133	1
	O ring	OB139	2
AVP FPC	O ring	OB141	1
AVP FPC	O ring	OB142	2
5-6 23	Seat	SD101	1

Table 5-4 Spares Kit Automatic without Differential Regulator Type AAS1491

Fig/Item No.	Description	Part No.	Quantity
5-3 5 8	Diaphragm	DB36	2
5-1 31	Filter	FA41	1
5-1 2 8	Orifice	OA30	1
AVP FPC	O ring	OB15	1
5-1 2 12	O ring	OB52	1
5-1 26	O ring	OB80	1
5-1 2 3	O ring	OB89	1
5-6 2 5-8 1 3	O ring	OB100	4
5-6 26	O ring	OB101	2
5-9 5	O ring	OB102	1
5-7 5 5-9 3 7	O ring	OB103	3
	O ring	OB104	2
	O ring	OB105	2
5-6 22 5-1 2 6	O ring	OB106	1
5-1 2 17	O ring	OB109	1
5-7 7 5-1 2 10	O ring	OB114	2
5-3 5 11 13 5-7 12	O ring	OB115	2
AVP FPC	O ring	OB125	2
5-9 3	O ring	OB125	2
AVP FPC	O ring	OB126	4
5-1 2 7	O ring	OB133	1
5-9 3 7	O ring	OB139	2
AVP FPC	O ring	OB141	1
AVP FPC	O ring	OB142	2

6. SERVICE OF MANUAL AMMONIATOR

This section identifies the spares kits available to assist with the maintenance of the Thames 60 Dosing Unit when used with ammonia gas. The information is given in the form of a listing of the items comprising the particular spares kits together with drawings on which the items can be identified.

The drawings are in exploded assembly form that not only makes for identification of the items and where they are within the assembly, but also should assist a competent Technician to dismantle the assembly in order to gain access to the item.

WARNING!

Only competent Technicians should dismantle assemblies.

Table 5-5 Spares Kit Manual Comprehensive Type AAS1448

Fig/Item No.		Description	Part No.	Quantity
5-6	12	Diaphragm	DB38	1
5-1 5-3 5	22 8	Diaphragm	DB41	1
5-1 2	8	Orifice	OA30	1
5-1 2	12	O ring	OB503	1
5-6 5-8	2 1 3	O ring	OB513	6
5-6	26	O ring	OB514	4
5-9	5	O ring	OB515	1
5-9 5-7	3 7 5	O ring	OB516	3
5-1 2 5-6	6 22	O ring	OB517	2
5-1 2	17	O ring	OB519	1
5-6	13	O ring	OB520	1
5-6	7	O ring	OB522	1
5-1 2 5-7	10 7	O ring	OB523	2
5-3 5 5-7	11 13 12	O ring	OB524	2
5-6	11	O ring	OB525	1
5-6	30	O ring	OB526	1

Fig/Item No.		Description	Part No.	Quantity
5-9	3 7	O ring	OB527	2
5-9	3 7	O ring	OB536	2
		O ring	OB537	2
		O ring	OB538	2
5-1 2	7	O ring	OB539	1
5-6	23	Seat	SD118	1

7. SPARE PARTS

The following tables list the Portacel part numbers for the items shown in Figures 5-1 to 5-8 inclusive. Where an item is shown but not available as a spare item an NS will appear in the part number column. Items marked with an asterisk ( ) are part of a spares kit.

Table 5-6 Manual Control Valve with Vacuum Relief Valve Part Numbers (Fig. 5-1)

Fig/Item Number	Description	Part Number	
		Chlorinator/ Sulphonator	Ammoniator
5-1 1	Control Valve Assembly (complete)	AAS927	41376
5-1 2	Drive Shaft	SF44	SF44
5-1 3	O Ring	OB89	OB508
5-1 4	Screw	SC68	SC68
5-1 5	Valve Stem	See Table 5-7	See Table 5-7
5-1 6	O Ring	OB106	OB517
5-1 7	O Ring	OB133	OB539
5-1 8	Orifice	OA30	OA30
5-1 9	Spacer	SK98	SK98
5-1 10	O Ring	OB114	OB523
5-1 11	Plug	PK72	PK72
5-1 12	O Ring	OB52	OB503
5-1 13	Screw	SM131	SM131
5-1 14	Connector	CO27	CO27
5-1 15	Top Meter Body	BH200	BH200
5-1 16	Cap	CC127	CC127
5-1 17	O Ring	OB109	OB519
5-1 18	O Ring	OB129	OB530
5-1 19	Plug	PK78	PK78
5-1 20	Screw	SM128	SM128

Fig/Item Number	Description	Part Number	
		Chlorinator/ Sulphonator	Ammoniator
5-1 21	Washer	WB77	WB77
5-1 22	Spring	SL77	SL77
5-1 23	Diaphragm Screw	BM56	BM56
5-1 24	Diaphragm	DB36	DB41
5-1 25	Diaphragm Nut	NE126	NE126
5-1 26	O Ring	OB80	OB504
5-1 27	Spacer	SK97	SK97
5-1 28	Nut	NE117	NE117
5-1 29	Screw	SM130	SM130
5-1 30	Vacuum Relief Valve Cap	AAS679	AAS679
5-1 31	Filter	FA41	FA41

Table 5-7 Valve Stem Part Numbers (Figs. 5-1 and 5-2)

Fig/Item Number	Description	Capacity (Kg/h)		Valve Stem Part Number (marked on end Chlorinator, Sulphonator & Ammoniator
		Cl_2/SO_2	NH_3	
5-1 2 5	Valve Stem	12.0	6.0	SN97
5-1 2 5	Valve Stem	15.0	7.5	SN98
5-1 2 5	Valve Stem	20.0	10.0	SN99
5-1 2 5	Valve Stem	30.0	15.0	SN100
5-1 2 5	Valve Stem	40.0	20.0	SN101
5-1 2 5	Valve Stem	60.0	30.0	SN101

SPECIAL TOOLS & EQUIPMENT	
Part No.	Required For
TE65	Diaphragm Bolt Item 23
TE66	Diaphragm Nut Item 25

1 Control Valve Assembly (complete)
2 Drive Shaft
3 'O' Ring
4 Screw
5 Valve Stem
6 'O' Ring
7 'O' Ring
8 Orifice
9 Spacer
10 'O' Ring
11 Plug
12 'O' Ring
13 Screw
14 Connector
15 Top Meter Body
16 Cap
17 'O' Ring
18 'O' Ring
19 Plug
20 Bolt
21 Washer
22 Spring
23 Diaphragm Bolt
24 Diaphragm
25 Diaphragm Nut
26 'O' Ring
27 Spacer
28 Nut
29 Screw
30 Vacuum Relief Valve Cap
31 Filter

NOTE:
Lubricate items with Chlorofluorocarbon Grease

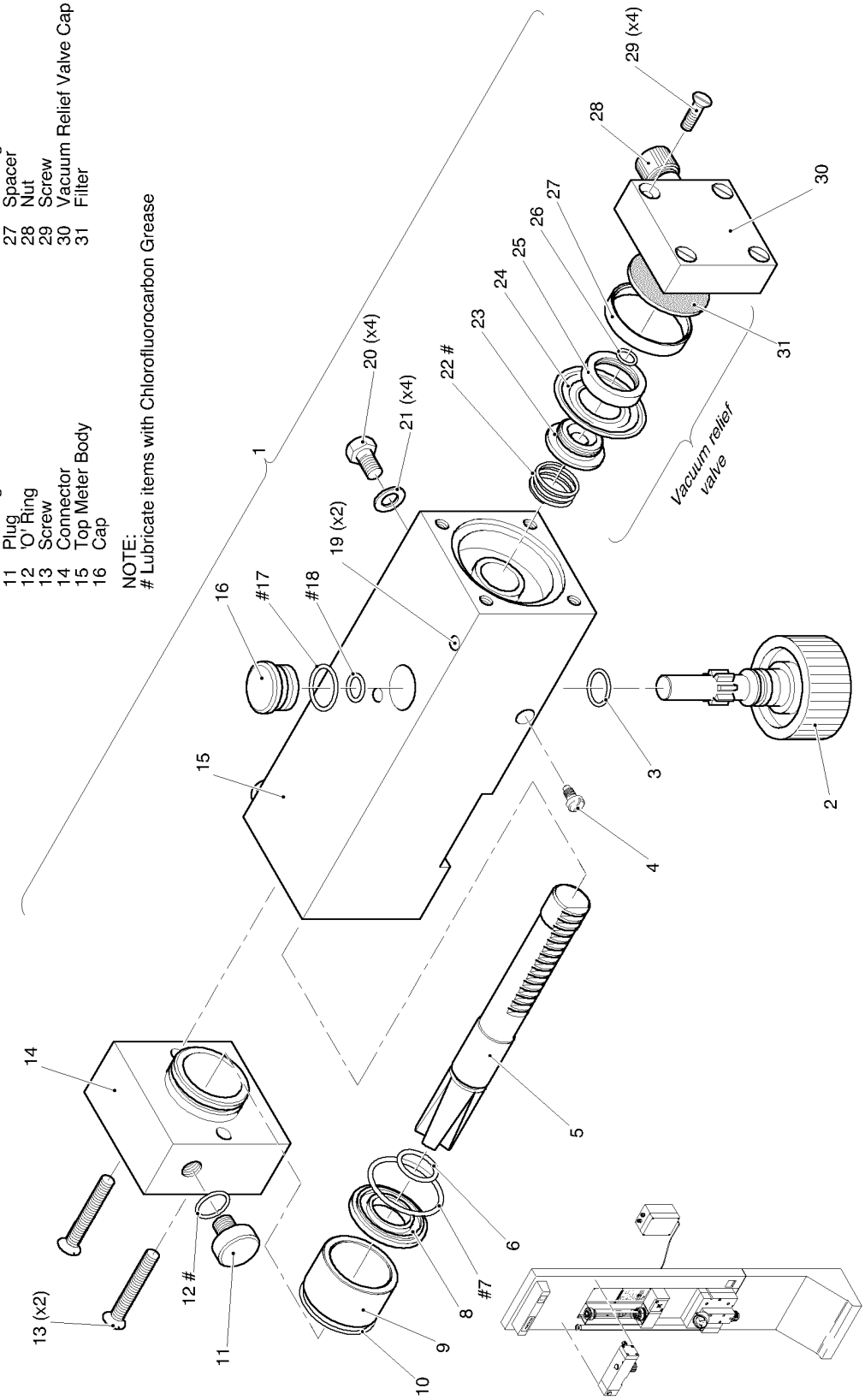

Fig. 5-1 Control Valve AAS927 with Vacuum Relief Valve

Table 5-8 Manual Control Valve without Vacuum Relief Valve Part Numbers (Fig. 5-2)

Fig/Item Number	Description	Part Number	
		Chlorinator/ Sulphonator	Ammoniator
5-2 1	Control Valve Assembly (complete)	AAS1272	41378
5-2 2	Drive Shaft	SF44	SF44
5-2 3	O Ring	OB89	OB508
5-2 4	Screw	SC68	SC68
5-2 5	Valve Stem	See Table 5-7	See Table 5-7
5-2 6	O Ring	OB106	OB517
5-2 7	O Ring	OB133	OB539
5-2 8	Orifice	OA30	OA30
5-2 9	Spacer	SK98	SK98
5-2 10	O Ring	OB 114	OB523
5-2 11	Plug	PK72	PK72
5-2 12	O Ring	OB52	OB503
5-2 13	Screw	SM131	SM131
5-2 14	Connector	CO27	CO27
5-2 15	Top Meter Body	BH200	BH200
5-2 16	Cap	CC127	CC127
5-2 17	O Ring	OB109	OB519
5-2 18	O Ring	OB129	OB530
5-2 19	Plug	PK78	PK78
5-2 20	Screw	SM128	SM128
5-2 21	Washer	WB77	WB77
5-2 22	O Ring	OB58	OB542
5-2 23	Cap	CC135	CC135
5-2 24	Screw	SM25	SM25

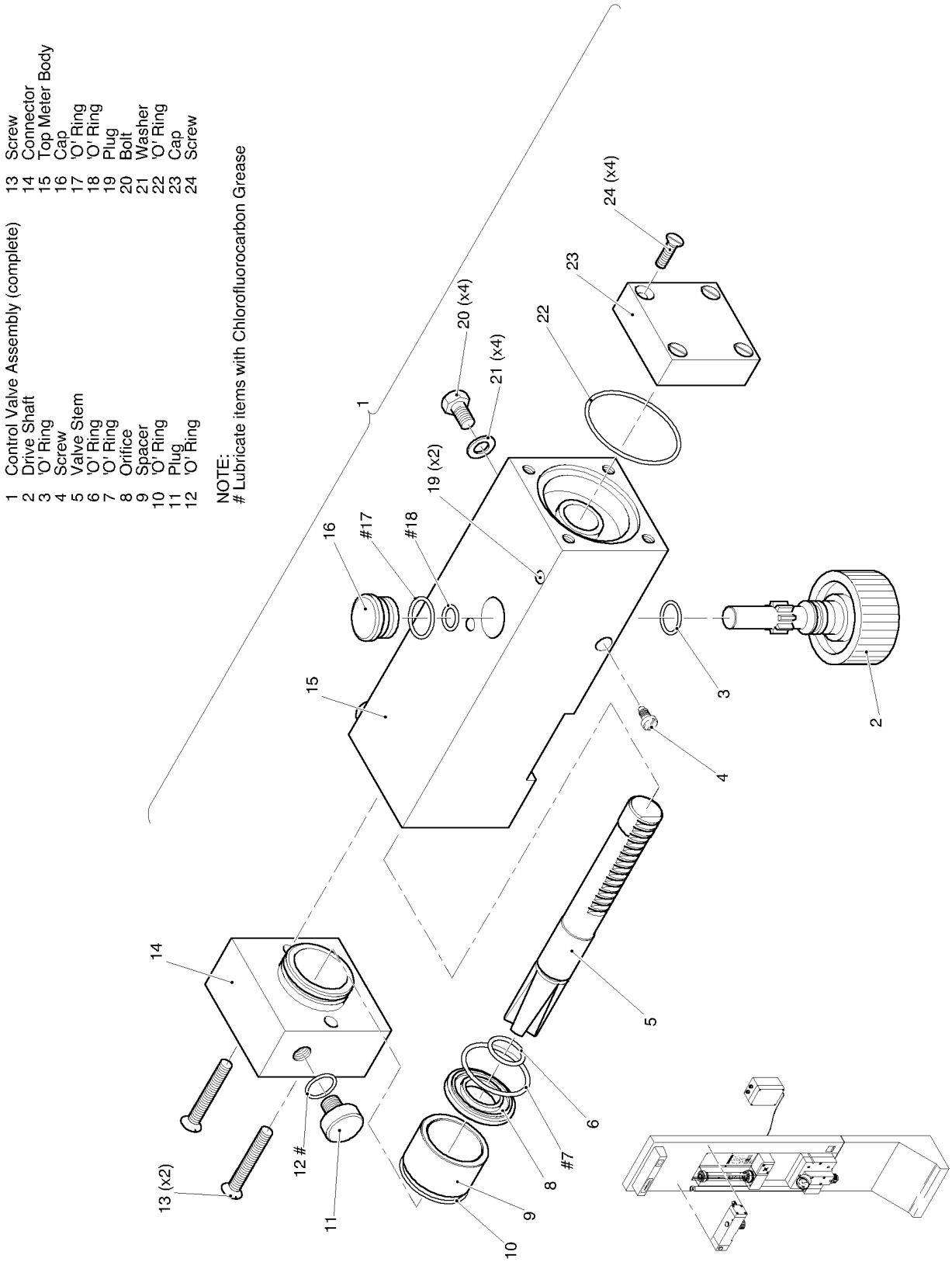

Fig. 5-2 Control Valve AAS1272 without Vacuum Relief

Table 5-9 Vacuum Alarm Switch AAS1327 Part Numbers (Fig. 5-3)

Fig/Item Number	Description	Part Number	
		Chlorinator/ Sulphonator AAS1327	Ammoniator (41388)
5-3 1	Screw	SM129	SM129
5-3 2	Adjustment Screw (Low)	SC69	SC69
5-3 3	Adjustment Screw (High)	SC70	SC70
5-3 4	Cap	CC133	CC133
5-3 5	Switch Unit	SS43	SS43
5-3 6	Spacer	SK121	SK121
5-3 7	Diaphragm Nut	NE126	NE126
5-3 8	Diaphragm	DB36	DB41
5-3 9	Diaphragm Bolt	SC62	SC62
5-3 10	Spring	SL78	SL78
5-3 11	O Ring	OB115	OB524
5-3 12	Connector	CO29	CO29
5-3 13	O Ring	OB115	OB524
5-3 14	Nut	NE117	NE117
5-3 15	Gland	GD34	GD34
5-3 16	Screw	SM128	SM128
5-3 17	Washer	WB77	WB77
5-3 18	Body	AAS986	AAS986

NOTE:
The Vacuum Alarm Switch will not operate electrically unless it is connected to Power Supply Unit AAS1285.

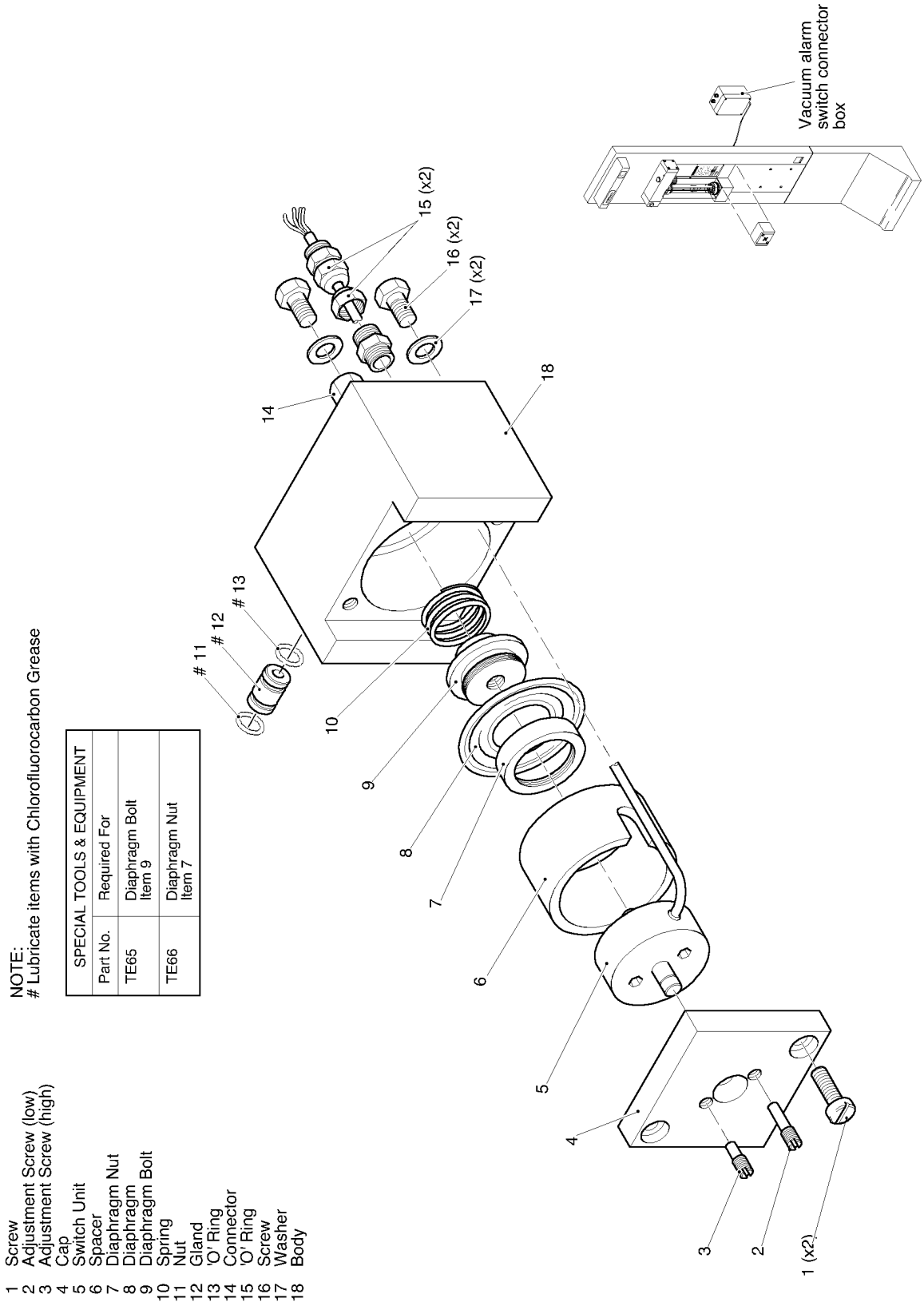

Fig. 5-3 Vacuum Alarm Switch AAS1327 (for units with a Differential Regulator)

Table 5-10 Vacuum Alarm Switch AAS1269 Part Numbers (Fig. 5-4)

Fig/Item Number	Description	Part Number	
		Chlorinator/ Sulphonator AAS1269	Ammoniator (40241)
5-4 1	Screw	SM129	SM129
5-4 2	Adjustment Screw (Low)	SC69	SC69
5-4 3	Adjustment Screw (High)	SC70	SC70
5-4 4	Cap	CC133	CC133
5-4 5	Switch Unit	SS43	SS43
5-4 6	Spacer	SK121	SK121
5-4 7	Diaphragm Nut	NE126	NE126
5-4 8	Diaphragm	DB36	DB41
5-4 9	Diaphragm Bolt	SC62	SC62
5-4 10	Spring	SL78	SL78
5-4 11	Gland 2	GD34	GD34
5-4 12	Screw	SM128	SM128
5-4 13	Washer	WB77	WB77
5-4 14	Body	BH217	BH217

NOTE:
The Vacuum Alarm Switch will not operate electrically unless it is connected to Power Supply Unit AAS1285.

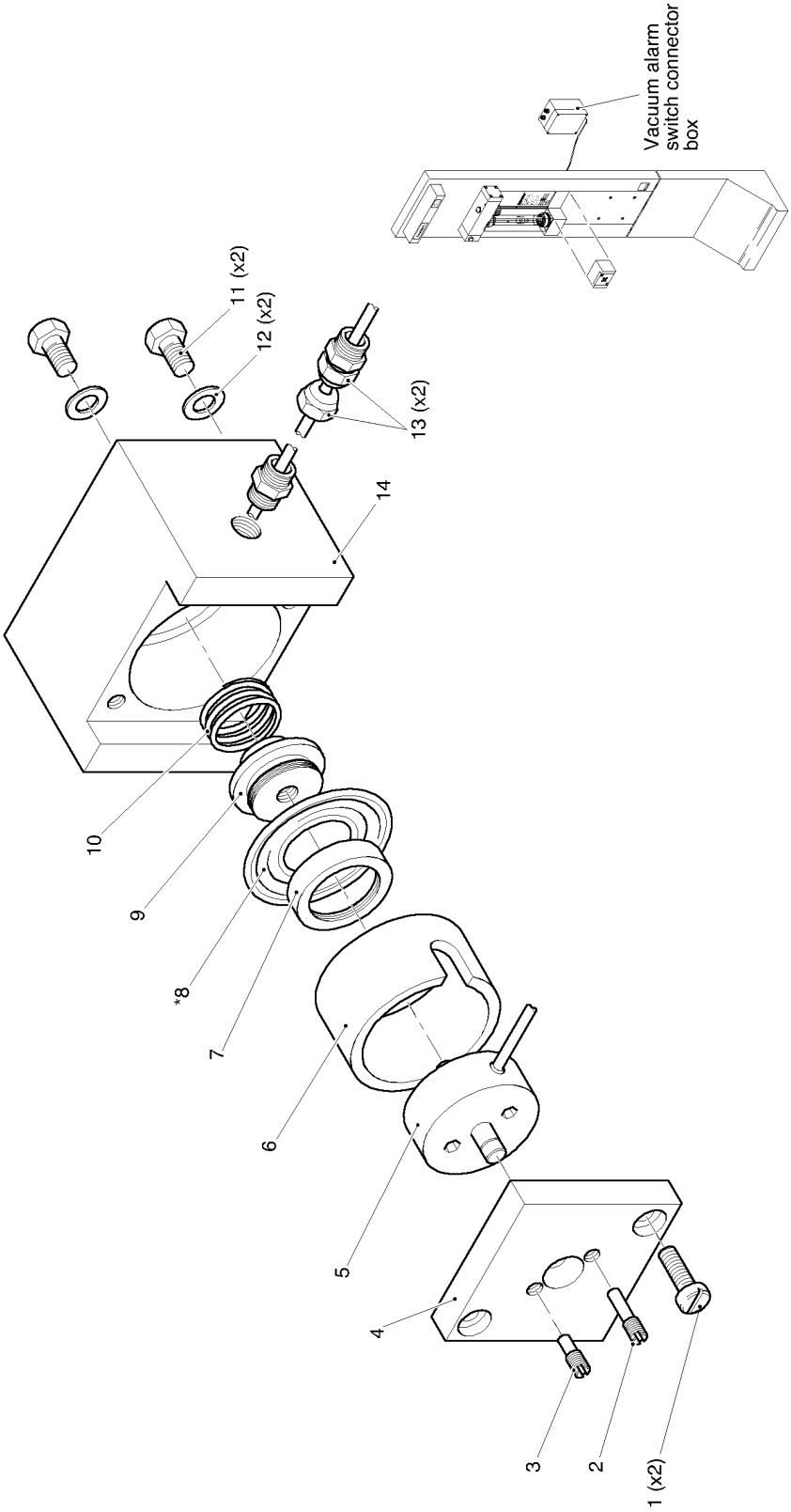

SPECIAL TOOLS & EQUIPMENT	
Part No.	Required For
TE65	Diaphragm Bolt Item 9
TE66	Diaphragm Nut Item 7

1 Screw
2 Adjustment Screw (low)
3 Adjustment Screw (high)
4 Cap
5 Switch Unit
6 Spacer
7 Diaphragm Nut
8 Diaphragm
9 Diaphragm Bolt
10 Spring
11 Screw
12 Washer
13 Gland
14 Body

Fig. 5-4 Vacuum Alarm Switch AAS1269 (for units with a Differential Regulator)

Table 5-11 Vacuum Alarm Switch AAS1486 Part Numbers (Fig. 5-5)

Fig/Item Number	Description	Part Number	
		Chlorinator/ Sulphonator AAS1486	Ammoniator (41389)
5-5 1	Screw	SM129	SM129
5-5 2	Adjustment Screw (Low)	SC69	SC69
5-5 3	Adjustment Screw (High)	SC70	SC70
5-5 4	Cap	CC133	CC133
5-5 5	Switch Unit	SS43	SS43
5-5 6	Spacer	SK121	SK121
5-5 7	Diaphragm Nut	NE126	NE126
5-5 8	Diaphragm	DB36	DB41
5-5 9	Diaphragm Bolt	SC62	SC62
5-5 10	Spring	SL78	SL78
5-5 11	O Ring	OB115	OB524
5-5 12	Connector	CO29	CO29
5-5 13	O Ring	OB115	OB524
5-5 14	Gland	GD34	GD34
5-5 15	Screw	SM128	SM128
5-5 16	Washer	WB77	WB77
5-5 17	Body	BH164	BH164

NOTE:
The Vacuum Alarm Switch will not operate electrically unless it is connected to Power Supply Unit AAS1285.

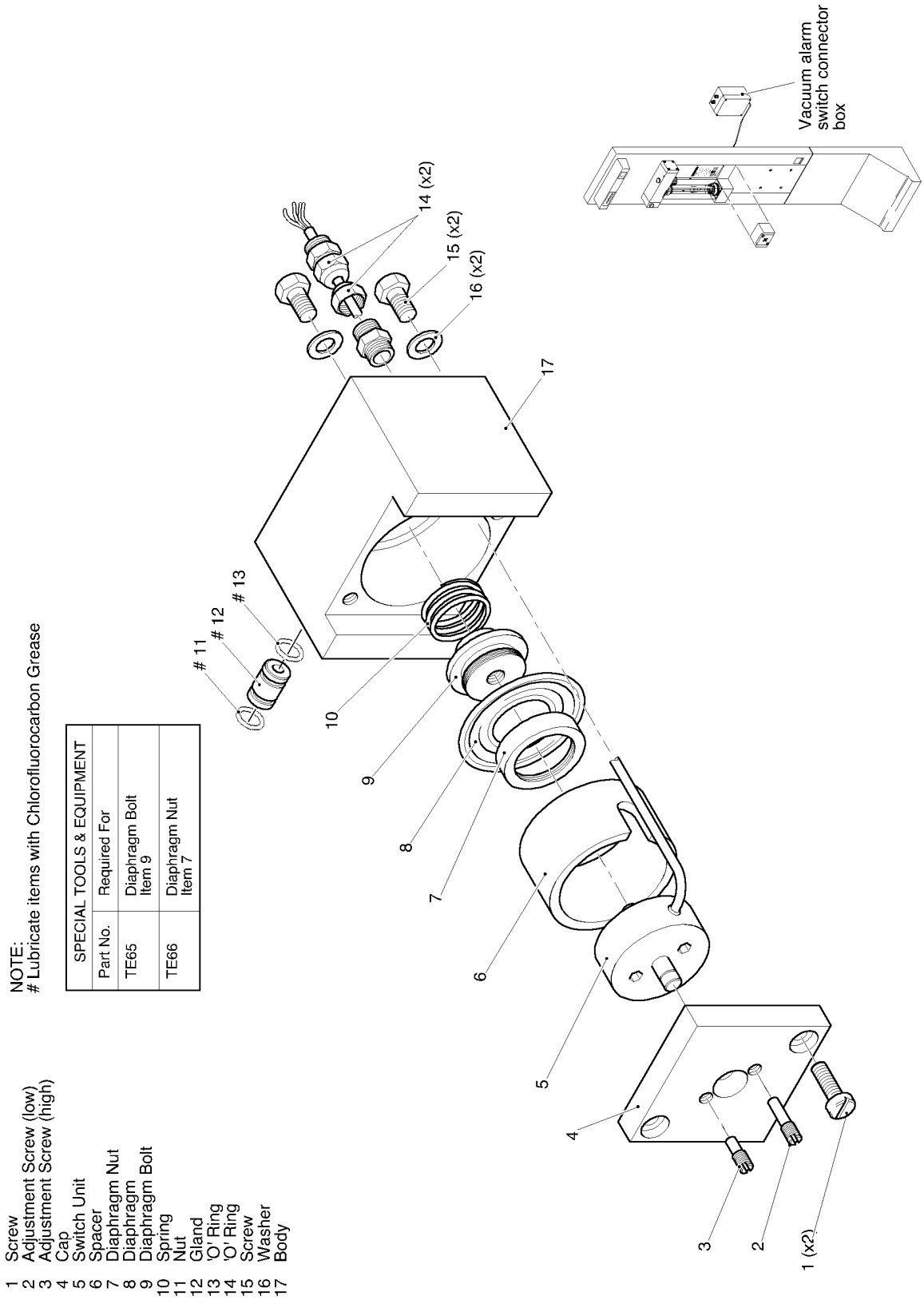

Fig. 5-5 Vacuum Alarm Switch AAS1486 (for units without a Differential Regulator)

Table 5-12 Differential Regulator AAS683 Part Numbers (Fig. 5-6)

Fig/Item Number	Description	Part Number	
		Chlorinator/ Sulphonator AAS683	Ammoniator (41390)
5-6 1	Screw	SM134	SM134
5-6 2	O Ring	OB100	OB513
5-6 3	Elbow By-Pass	AAS952	AAS952
5-6 4	Screw	SM133	SM133
5-6 5	Gauge-Vacuum	GB44	GB44
5-6 6	Nut	NE117	NE117
5-6 7	O Ring	OB112	OB522
5-6 8	Plug	PL44	PL44
5-6 9	Spring	SL76	SL76
5-6 10	Retainer	RE83	RE83
5-6 11	O Ring	OB116	OB525
5-6 12	Diaphragm	DB38	DB38
5-6 13	O Ring	OB110	OB520
5-6 14	Nut	NE117	NE117
5-6 15	Feedback Hose	PB 127	PB 127
5-6 16	Washer	WB77	WB77
5-6 17	Screw	SM128	SM128
5-6 18	Screw	SM135	SM135
5-6 19	Back Body	AAS670	AAS670
5-6 20	Ring-Diaphragm	RB45	RB45
5-6 21	Plate-Diaphragm	PF73	PF73
5-6 22	O Ring	OB106	OB517
5-6 23	Seat-Valve	SD101	SD118
5-6 24	Body-Front	BH160	BH160

Fig/Item Number	Description	Part Number	
		Chlorinator/ Sulphonator AAS683	Ammoniator (41390)
5-6 25	Nut	NE128	NE128
5-6 26	O Ring	OB101	OB514
5-6 27	Valve	VA49	VA49
5-6 28	O Ring	OB101	OB514
5-6 29	Union Nut	NS	NS
5-6 30	O Ring	OB117	OB526
5-6 31	Block-Outlet	BH161	BH161

Items not included in the Assembly Structures.

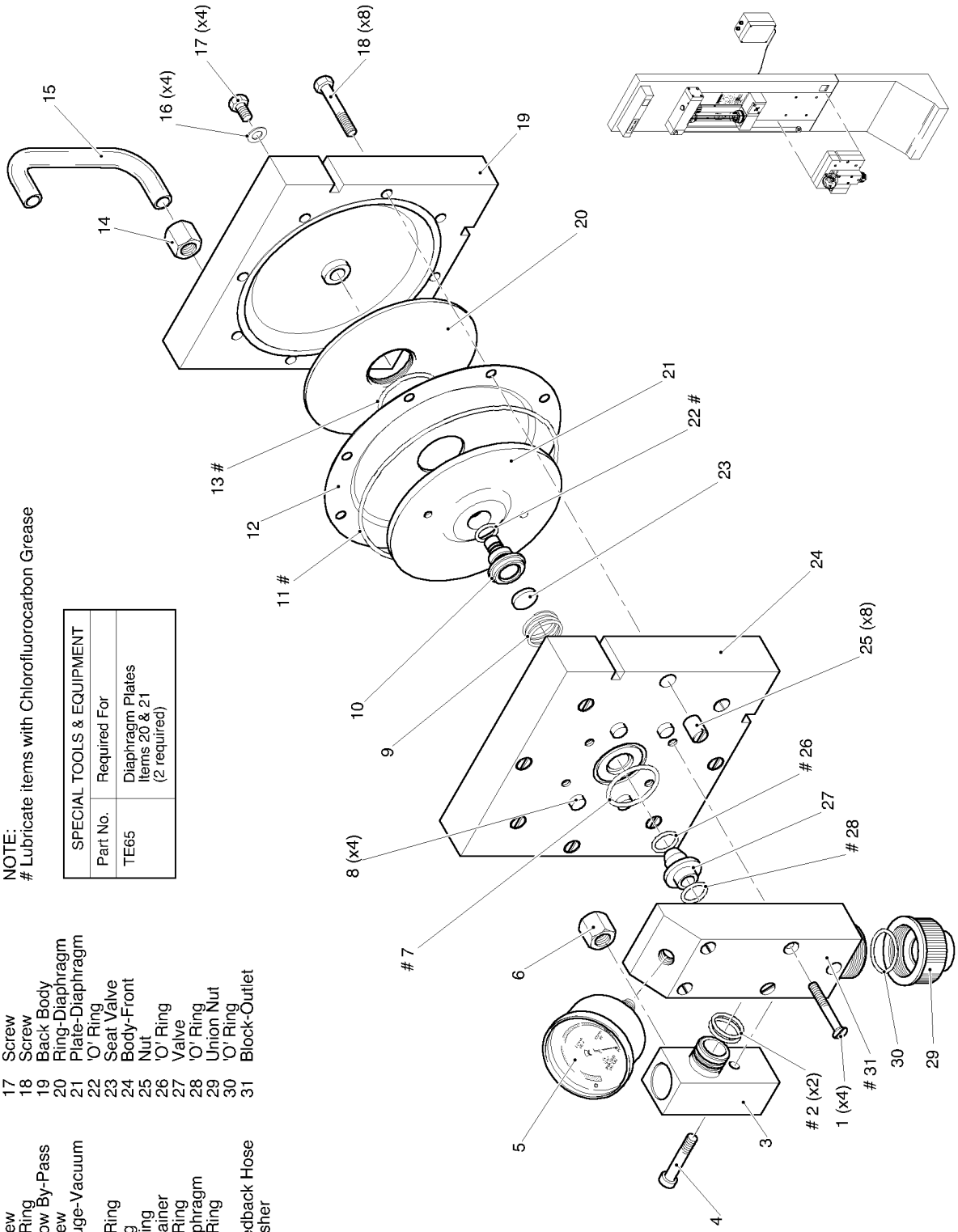

Fig. 5-6 Differential Regulator AAS683

Table 5-13 Bottom Meter Block AAS680 Part Numbers (Fig. 5-7)

Fig/Item Number	Description	Part Number	
		Chlorinator/ Sulphonator AAS680	Ammoniator (41396)
5-7 1	Screw	SM128	SM128
5-7 2	Washer	WB77	WB77
5-7 3	Retaining Plate	RE85	RE85
5-7 4	Meter Block	AAS675	AAS675
5-7 5	O Ring	OB103	OB516
5-7 6	Cap	CO30	CO30
5-7 7	O Ring	OB114	OB523
5-7 8	Screw	SM128	SM128
5-7 9	Washer	WB77	WB77
5-7 10	Ring	RB46	RB46
5-7 11	Nut Tube	NE117	NE117
5-7 12	O Ring	OB115	OB524
5-7 13	Plug	PL43	PL43

Items not included in AAS680.

NOTES:

* Items marked are part of a spares kit

** Only fitted when there is no Differential Regulator

*** Only used when there is no Vacuum Switch

\# Lubricate items with Chlorofluorocarbon Grease

\+ Items not included in AAS 680

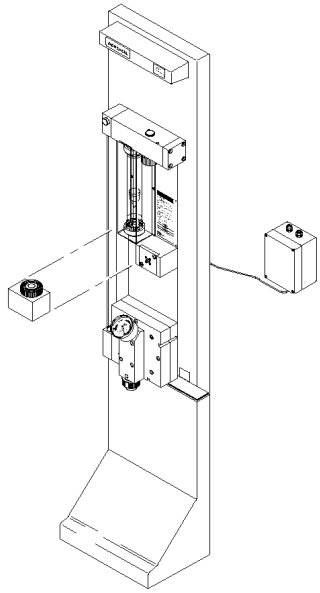

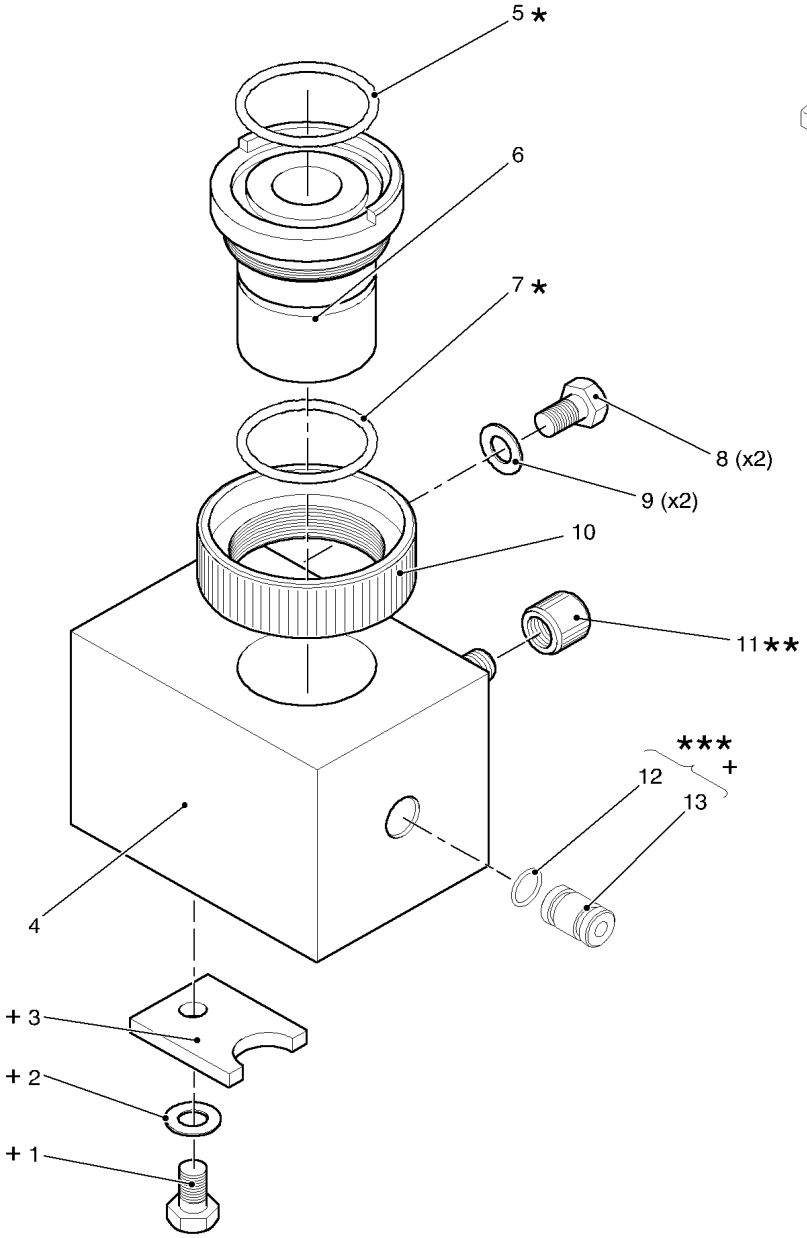

1 Screw
2 Washer
3 Retaining plate
4 Meter Block
5 'O' Ring
6 Cap
7 'O' Ring
8 Screw
9 Washer
10 Ring
11 Nut Tube
12 'O' Ring
13 Plug

Fig. 5-7 Bottom Meter Block AAS680

Table 5-14 Bypass Tube Part Numbers (Fig. 5-8)

Fig/Item Number	Description	Part Number	
		Chlorinator/ Sulphonator	Ammoniator
5-8 1	O Ring	OB100	OB513
5-8 2	Pipe	PB125	PB125
5-8 3	O Ring	OB100	OB513

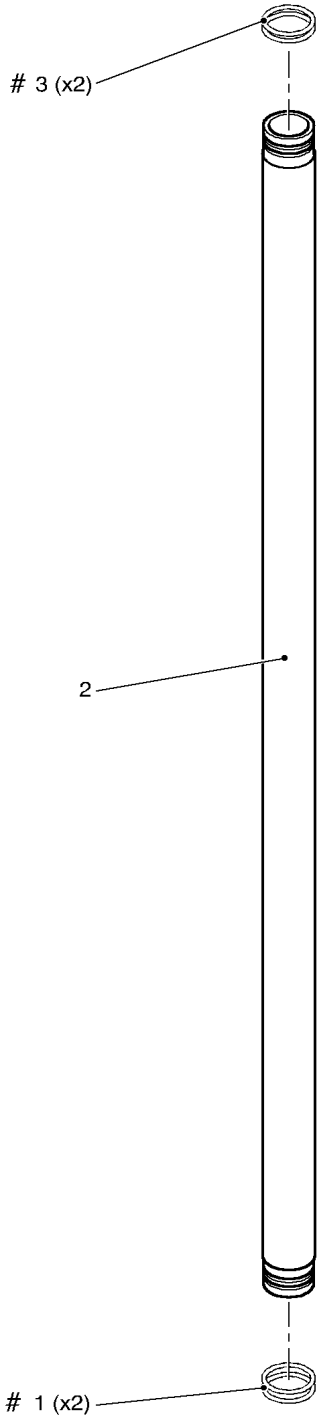

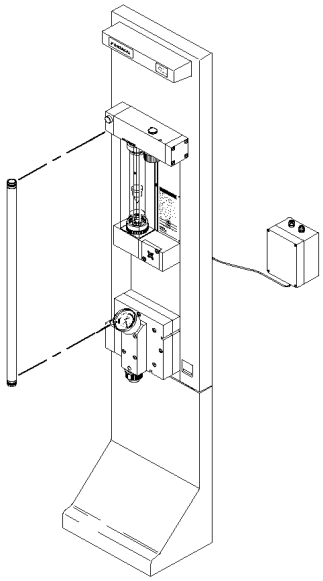

NOTES:

Lubricate items with Chlorofluorocarbon Grease

1 'O' Ring
2 Pipe
3 'O' Ring

5-8 Bypass Tube (only fitted on units with a Differential Regulator)

Table 5-15 Flowmeter Tube 60Kg/h Cl_2 and SO_2 - Part Numbers (Fig. 5-9)

Fig/Item Number	Description	Part Number	
		Chlorinator/ Sulphonator AAS1484	Ammoniator (41401)
5-9 1	Long Cover	CP109	CP109
5-9 2	Screw	SM54	SM54
5-9 3	O Ring	OB139	OB536
5-9 4	Top Fitting	FC259	FC259
5-9 5	O Ring	OB102	OB515
5-9 6	Meter Tube	TK174	41400
5-9 7	O Ring	OB139	OB536
5-9 8	Bottom Fitting	FC260	FC260

Table 5-16 Flowmeter Tube 40Kg/h Cl_2/SO_2 and 20Kg/h NH_3 - Part Numbers (Fig. 5-9)

Fig/Item Number	Description	Part Number	
		Chlorinator/ Sulphonator AAS704	Ammoniator AAS1436
5-9 1	Long Cover	CP109	CP109
5-9 2	Screw	SM54	SM54
5-9 3	O Ring	OB139	OB536
5-9 4	Top Fitting	FC259	FC259
5-9 5	O Ring	OB102	OB515
5-9 6	Meter Tube	TK96	TK172
5-9 7	O Ring	OB139	OB536
5-9 8	Bottom Fitting	FC260	FC260

Items not included in the assembly structures

Table 5-17 Flowmeter Tube 30Kg/h Cl_2/SO_2 and 15Kg/h NH_3 - Part Numbers (Fig. 5-9)

Fig/Item Number	Description	Part Number	
		Chlorinator/ Sulphonator AAS705	Ammoniator ASS1437
5-9 1	Long Cover	CP109	CP109
5-9 2	Screw	SM54	SM54
5-9 3	O Ring	OB103	OB516
5-9 4	Adaptor	FC243	FC243
5-9 5	O Ring	OB102	OB515
5-9 6	Meter Tube	TK95	TK171
5-9 7	O Ring	OB103	OB516
5-9 8	Adaptor	FC243	FC243

Table 5-18 Flowmeter Tube 20Kg/h Cl_2/SO_2 and 10Kg/h NH_3 - Part Numbers (Fig. 5-9)

Fig/Item Number	Description	Part Number	
		Chlorinator/ Sulphonator AAS706	Ammoniator AAS1438
5-9 1	Long Cover	CP109	CP109
5-9 2	Screw	SM54	SM54
5-9 3	O Ring	OB103	OB516
5-9 4	Adaptor	FC243	FC243
5-9 5	O Ring	OB102	OB515
5-9 6	Meter Tube	TK94	TK170
5-9 7	O Ring	OB103	OB516
5-9 8	Adaptor	FC243	FC243

Items not included in the assembly structure

Table 5-19 Flowmeter Tube 15Kg/h Cl_2/SO_2 and 7.5Kg/h NH_3 - Part Numbers (Fig. 5-9)

Fig/Item Number	Description	Part Number	
		Chlorinator/ Sulphonator AAS707	Ammoniator AAS1439
5-9 1	Long Cover	CP109	CP109
5-9 2	Screw	SM54	SM54
5-9 3	O Ring	OB103	OB516
5-9 4	Adaptor	FC243	FC243
5-9 5	O Ring	OB102	OB515
5-9 6	Meter Tube	TK93	TK169
5-9 7	O Ring	OB103	OB516
5-9 8	Adaptor	FC243	FC243

Table 5-20 Flowmeter Tube 12Kg/h Cl_2/SO_2 and 6.0Kg/h NH_3 - Part Numbers (Fig. 5-9)

Fig/Item Number	Description	Part Number	
		Chlorinator/ Sulphonator AAS708	Ammoniator AAS1440
5-9 1	Short Cover	CP108	CP108
5-9 2	Screw	SM54	SM54
5-9 3	O Ring	OB125	OB527
5-9 4	Adaptor	FC243	FC243
5-9 5	O Ring	OB102	OB515
5-9 6	Meter Tube	TK98	TK168
5-9 7	O Ring	OB103	OB527
5-9 8	Adaptor	FC243	FC243

Items not included in the assembly structure

NOTES:

* Items marked are part of a spares kit

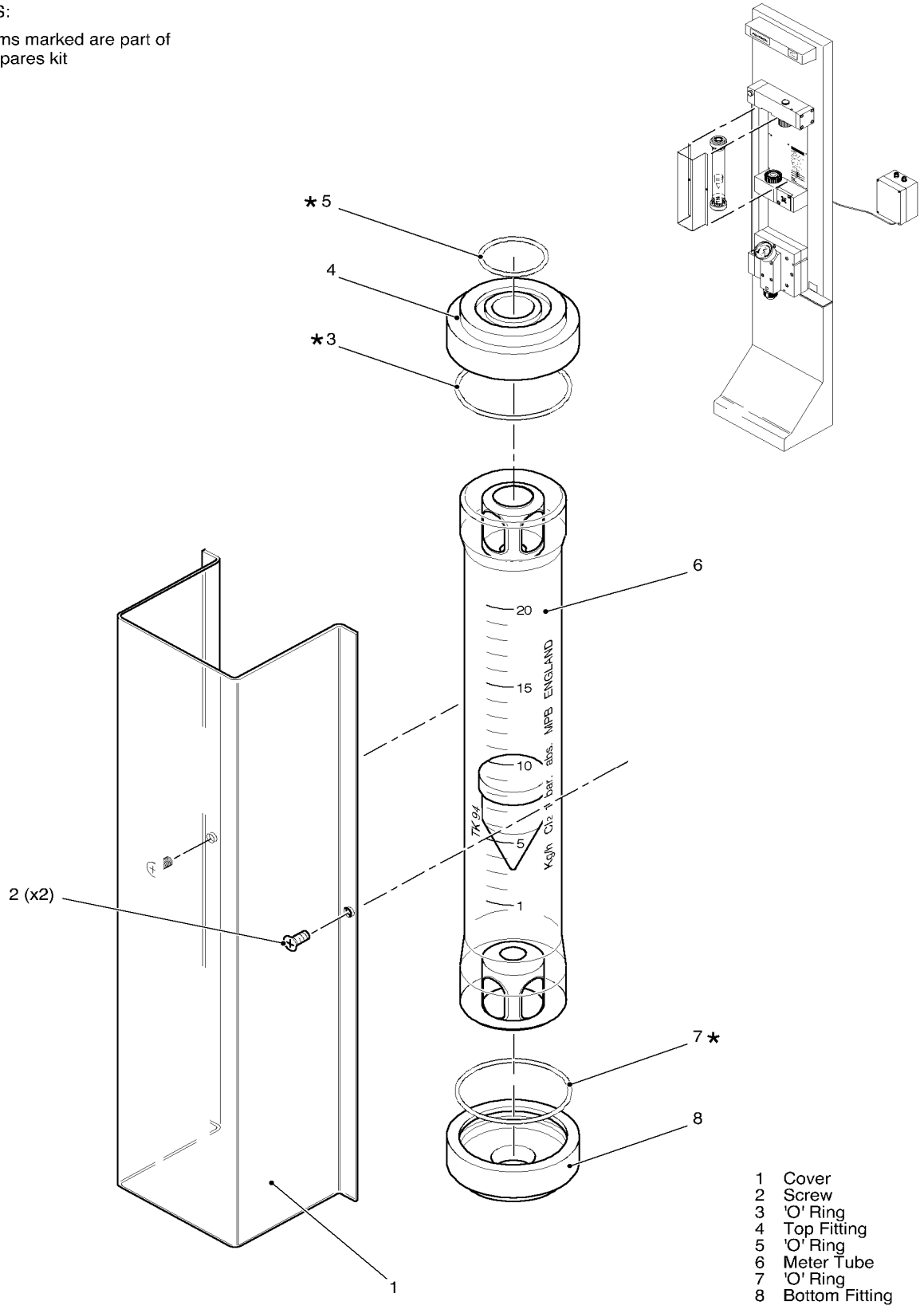

Fig. 5-9 Flowmeter Tube

Chapter 6

Options

Contents

Para.		Page
	INTRODUCTION	6.3
1.	GENERAL	6.5
2.	OPTION 1: AUTOMATIC VALVE POSITIONER (AVP)	6.5
3.	OPTION 2: FLOW PROPORTIONAL CONTROLLER (FPC)	6.5
4.	INSTALLATION OF AVP AND FPC CONTROLLERS	6.6
5.	REMOVAL OF AVP AND FPC CONTROLLERS	6.7

ILLUSTRATIONS

Fig. No.		Page
6-1	Typical Installation of AVP and FPC Controllers	6.11

TABLES

Table No.		Page
6-1	Typical Installation of AVP and FPC Controllers Part Numbers	6.9

INTRODUCTION

This Chapter contains the additional information on optional equipment supplied with the Thames 60 Dosing Unit. All information in the following sections is unique to the options supplied. Information already supplied in the Thames 60 Dosing Unit Operating and Maintenance Manual is not repeated in this Chapter.

1. GENERAL

A vacuum relief valve can be provided as an option to protect the system should the vacuum within the system become excessive. On capacities up to 40 Kg h an optional differential regulator can be provided in order to maintain a constant vacuum across the control valve and allow for pressure fluctuations at the ejector. To monitor the chlorinator, an optional vacuum switch and visual button can be provided to indicate high or zero vacuum status.

2. OPTION 1: AUTOMATIC VALVE POSITIONER (AVP)

The chlorinator is adapted to automatic control by the addition of an automatic valve positioner. A water flow signal and residual signal are used to set a gas flow rate by positioning a control valve.

The AVP controller is used to vary the dose of disinfecting gas in response to the two analogue signals. An input signal from a flowmeter is used to position a control valve and set a gas flow rate. This rate is precisely adjusted by measuring the residual levels of the disinfecting gas in the treated water. The system allows a time lag between the two inputs to ensure that a change in gas flow has time to register at the point of analysis.

Output terminals are provided so that valve position indication is possible.

For a detailed description of the operation of the AVP, refer to the Operating and Maintenance Manual Part No.41313.

3. OPTION 2: FLOW PROPORTIONAL CONTROLLER (FPC)

The chlorinator is also adapted to automatic control by the addition of an automatic flow proportional controller. A water flow signal determines a proportional gas flow rate that is set by a control valve.

The FPC is used to vary the dose of disinfecting gas in response to a single analogue signal. This signal usually comes from a flow meter, with gas flow being adjusted in proportion to water flow. The controller has the facility for proportional dosing over a range of 4:1 and 1:4. Gas flow is adjusted by a servomotor driving the control valve in the dosing unit. The valve position then provides an output signal that can give a direct indication of gas flow. Remote indication of controller status is possible, in automatic mode, using a relay contact provided.

For a detailed description of the operation of the FPC, refer to the Operating and Maintenance Manual Part No.41314.

4. INSTALLATION OF AVP AND FPC CONTROLLERS

The installation procedure for the AVP and FPC controllers is identical for both units.

(1) If changing from a manual doser, remove the manual drive shaft, cap and associated O rings, as described in Chapter 5 Section 2.1.1 of this O & M manual.

(2) Install the controller on the doser by slotting the unit over the location studs.

(3) Using a screwdriver, insert the two screws securing the controller to the panel.

(4) Fit all new O ring seals.

(5) Align the control valve stem gearing with the control knob gearing by:

   (a) Pushing the control valve stem into the control valve body until the stem protrudes from the face of the body by approximately 1.5 mm.

   (b) Aligning the yellow dot on the control knob with the line on the block.

   (c) Inserting the control knob into the gearing on the control valve stem.

(6) Push the by-pass tube into position to make sure that the orifice is correctly seated.

(7) Replace the two screws securing the by-pass tube to the control valve body.

(8) Using a screwdriver, insert the single screw securing the drive shaft, retained in the removal procedure.

(9) Place the motor gearbox into position by gently aligning it over the location studs.

(10) Using an 8 mm ring spanner, secure the motor gearbox to the controller with the two nuts and washers retained in the removal procedure (Step 11).

(11) Reconnect the electrical plug connecting the motor gearbox to the controller.

(12) Replace the two grub screws retained in the removal procedure (Step 7) using the 2.5 mm Allen key.

(13) Align the clutch operating shaft with the access hole in the controller case, and push into the hole until the seat is located correctly.

(14) Align the spring and operating lever in the correct positions and tighten the operating lever collar using the 1.5 mm Allen key.

(15) Replace the securing shim and the clutch operating knob to the shaft and secure with the nut and washer retained in the removal procedure (Step 15).

(16) Replace the centre cap to the knob retained in the removal procedure (Step 13).

(17) Close and secure the controller panel and tighten the four securing screws.

(18) Seal all vacuum pipework disturbed during the removal procedure.

(19) Carry out a leak check (see Chapter 3 of this O & M Manual).

(20) Carry out a calibration procedure (refer to the specific AVP or FPC O & M Manual).

5. REMOVAL OF AVP AND FPC CONTROLLERS

The removal of the AVP and the FPC controllers is identical for both units.

(1) Referring to the site operating instructions, isolate the gas supply to the vacuum regulator supplying the unit.

(2) Allow the unit to operate under vacuum (i.e. with the ejector running) to draw any remaining gas through the pipework.

(3) With the ejector running, open the pipework on the vacuum side of the vacuum regulator, and as close to the regulator as possible, to purge the pipework of gas.

(4) Switch off the ejector.

(5) Using a screwdriver, remove and retain the two screws retaining the by-pass tube to the control valve then pull the by-pass tube from the seating in the control valve.

(6) Loosen the four screws of the controller front panel then pull the panel forwards and hinge open.

(7) Using a 2.5 mm Allen key remove and retain the two grub screws securing the drive shaft to the motor gearbox.

CAUTION!
To prevent damage to the motor gearbox and drive shaft assembly, ensure that the clutch is operated whilst turning the control knob to align the two grub screws.

(8) Using a screwdriver, remove and retain the single securing screw retaining the drive shaft to the control valve.

(9) Remove the drive shaft.

(10) Withdraw the control valve stem, control valve operating orifice and seals from the control valve.

(11) Using an 8 mm ring spanner, remove and retain the two nuts and washers securing the motor gearbox to the control valve.

(12) Disconnect the electrical plug connecting the motor gearbox to the controller.

(13) Gently remove and retain the centre cap of the motor gearbox clutch knob by levering it out.

(14) Using a 9 mm ring spanner, remove and retain the nut and washer securing the knob to the shaft.

(15) Remove and retain the knob and the securing shim from the shaft.

(16) Using a 1.5 mm Allen key, loosen the clutch operating lever on the shaft.

(17) Push the operating lever through the controller case while making sure that the spring and lever slide down the shaft. Retain the spring and lever slide.

(18) Remove the motor gearbox from the controller by gently separating the assembly from the control valve shaft.

(19) Unscrew the two screws securing the controller unit to the panel.

(20) Remove the controller from the doser unit by lifting the unit clear of the locating studs.

(21) If reverting to a manual doser, install the manual drive shaft as described in Chapter 5 Section 2.1.2 of this O & M Manual.

Table 6-1 Typical Installation of AVP and FPC Controllers Part Numbers

Fig/Item No.		Description	Part No.	Quantity
6-1	1	Drive shaft	AAS926	1
6-1	2	Grub screw	SM159	2
6-1	3	O ring	OB89	1
6-1	4	Screw	SC68	1
6-1	5	Valve stem	See Table	1
6-1	6	O ring	OB106	1
6-1	7	O ring	OB133	1
6-1	8	Orifice	OA30	1
6-1	9	Spacer	SK98	1
6-1	10	O ring	OB114	1
6-1	11	Screw	SM131	2
6-1	12	Connector	CO27	1
6-1	13	Screw	NS	4
6-1	14	Front panel	NS	1
6-1	15	Terminal box	NS	1
6-1	16	Motor gearbox assembly	AAS917	1
6-1	17	Nut	ND69	2
6-1	18	Washer	WB59	2
6-1	19	Grub screw	SM137	1
6-1	20	Stud	SR34	2
6-1	21	Lever	LA3	1
6-1	22	Spring	SL80	1
6-1	23	Shaft	SF42	1
6-1	24	Retaining pin	RE87	1
6-1	25	Knob	KB28	1
6-1	26	O ring	OB15	1
6-1	27	Cap	CC115	1
6-1	28	Control valve body	BH200	1
6-1	29	O ring	OB141	1

NOTE:
Lubricate items with Chlorofluorocarbon Grease

1	Drive shaft	16	Motor Gearbox assy
2	Grub screw	17	Nut
3	"O" Ring	18	Washer
4	Screw	19	Grub Screw
5	Valve Stem	20	Stud
6	"O" Ring	21	Lever
7	"O" Ring	22	Spring
8	Orifice	23	Shaft
9	Spacer	24	Retaining Pin
10	"O" Ring	25	Knob
11	Screw	26	"O" Ring
12	Connector	27	Cap
13	Screw	28	Control Valve Body
14	Front Panel	29	"O" Ring
15	Terminal Box		

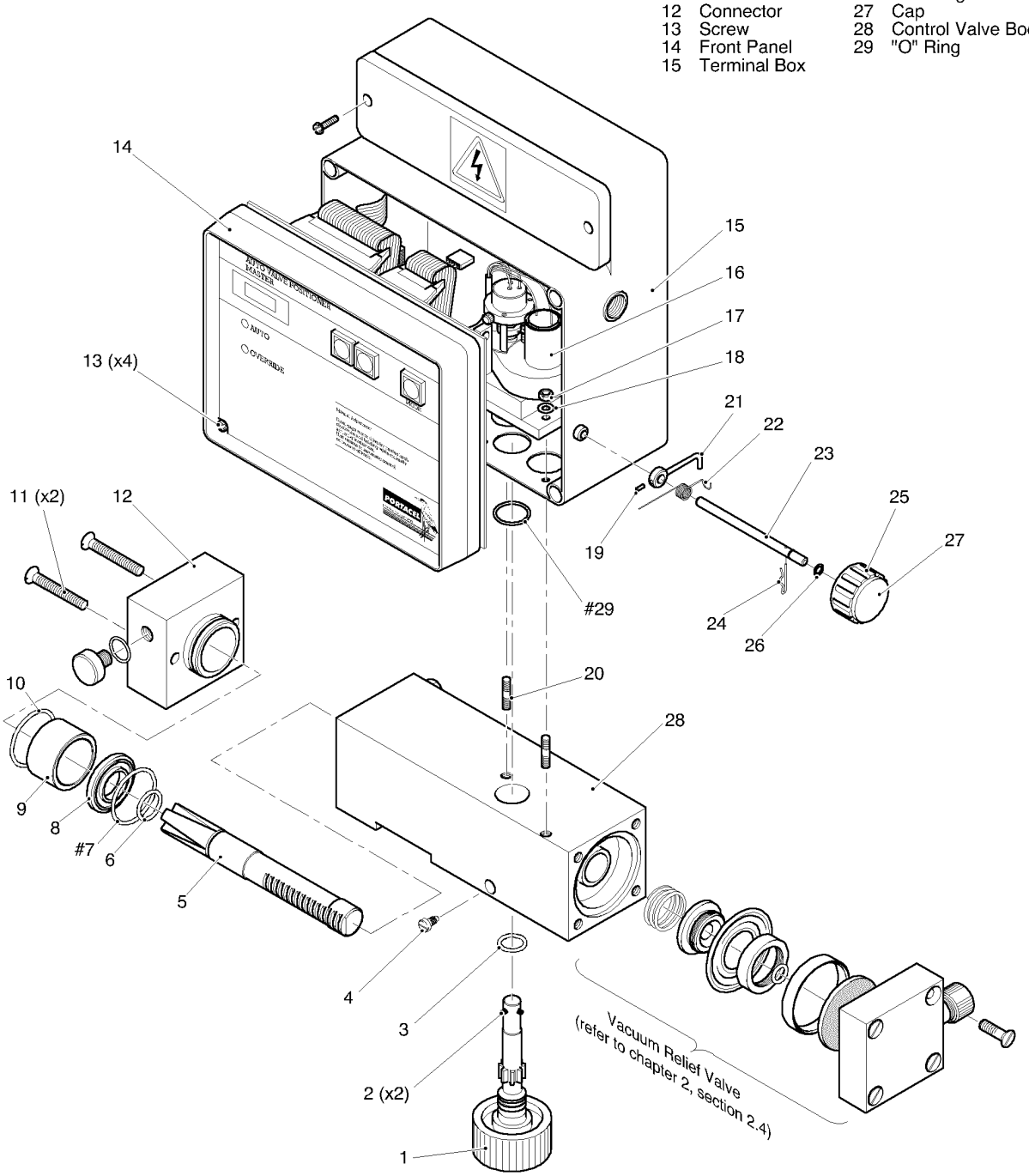

Fig. 6-1 Typical Installation of AVP and FPC Controllers

COLNE Compact

Dual Toxic Gas Monitor

The Colne Compact is a single or dual channel gas detection system for chlorine or sulphur dioxide leak detection. It has several unique features, such as programmable data logging and gas sensor self-test function (chlorine models only).

The self-test feature uses a chlorine gas generator cell incorporated into the detector unit. At operator programmed intervals, gas is passed across the sensor head(s) to check performance, thereby increasing operator confidence. If, after a pre-set time during the generating cycle, the sensor has not detected chlorine in excess of its lower alarm level, then a fault alarm is raised. Advantages include significantly reduced use of calibration gas and operator time.

Data logging intervals are programmable and up to 4000 records can be stored. If a gas leak is detected, the logging interval is shortened for accurate plotting. Data can be viewed graphically on the backlit LCD screen.

Both the control unit and gas heads have steel enclosures with IP65 environmental rating.

- Optional programmable gas sensor self-test facility (chlorine models)
- Programmable data logging
- Single or dual channel versions
- Single or dual 4-20 mA analogue outputs
- 5 software controlled SPCO relays
- Minimum 10 hour battery back-up
- Backlit LCD user interface
- Contacts for connection of external re-set button
- 2 software controlled solid-state outputs (switched 12V) for external beacon and/or sounder
- Mains failure detection
- CE marked

PORTACEL

DISINFECTION SYSTEMS

AN ISO 9001:2000 ACCREDITED COMPANY

Technical Specification – Control Unit

Dimensions: Enclosure length	215 mm
Enclosure width	177 mm
Enclosure depth	81 mm nominal
Base plate	223 mm x 211 mm x 1.5 mm
Fixing holes	7 mm diameter
Fixing centres	199 mm x 136 mm
Gland entries	Five no.10 x 16 mm glands supplied with blanking plugs
Environmental rating	IP65
Weight	3.5 kg
Operating temperature range	-10^{0}C to +45^{0}C
Safety standard	EN61010-1: 1993
EMC standard	EN61326: 1997, A1: 1998
Input voltage	85 – 264V AC, 47 – 440 Hz
Input power	15W max
In-rush current	15A @ 100V AC, 30A @ 200V AC
Battery back-up (10 hr minimum)	1.2 Ahr 12V battery (within enclosure)
External battery	Terminals provided for connection of additional external battery if required
Analogue outputs	4-20 mA output per channel (1-5 V option available via link switches)
Alarm outputs	One high and low gas alarm per channel
Sounder output	12V DC, 50 mA max
Beacon output	12V DC, 150 mA max
Relay outputs	Five SPCO relays, all with voltage-free single pole changeover contacts. Each channel has a high and low alarm relay - two relays will be disabled on single channel units. A single alarm relay is provided for mains power or gas sensor failure
Display	100 x 33 dot LCD graphical display
Keypad	4-button multi-function keypad
Clock	Real-time clock included as standard
Datalogging	Capacity for 4000 records. This equates to approximately 10 weeks of data per channel based on a sampling rate of 1 sample/hr. Records are automatically overwritten once the memory is full

Technical Specification – Gas Heads

Dimensions: Enclosure length	96 mm
Enclosure width	96 mm
Enclosure depth	81 mm
Base plate	94 mm x 146 mm x 1.5 mm
Weight	1.5 kg
Operating temperature	-10^{0}C to +45^{0}C
Humidity	0% to 95% RH non-condensing
T90 Response Time	<30 seconds (after pre-exposure to 1 ppm for 2 minutes)
Standard range	0 – 10 ppm
Maximum range	0 – 20 ppm
Cable resistance	100 ohms max
Safety standards	EN61010 -1: 1993

Portacel
Winnall Valley Road
Winchester, Hampshire
UK, SO23 0LD
Tel: +44 1962 826300
Fax: +44 1962 866084
e-mail: portacel@pcimem.com
A part of PCI Membranes

Visit the Portacel web site for further information on these and other Portacel products:www.portacel.com

PORTACEL – The Colour Is Yellow

We reserve the right to change the design and specification without notice. ©PCI Membranes